REVISIONS				
ZONE	LTR	DESCRIPTION	DATE	APPR.

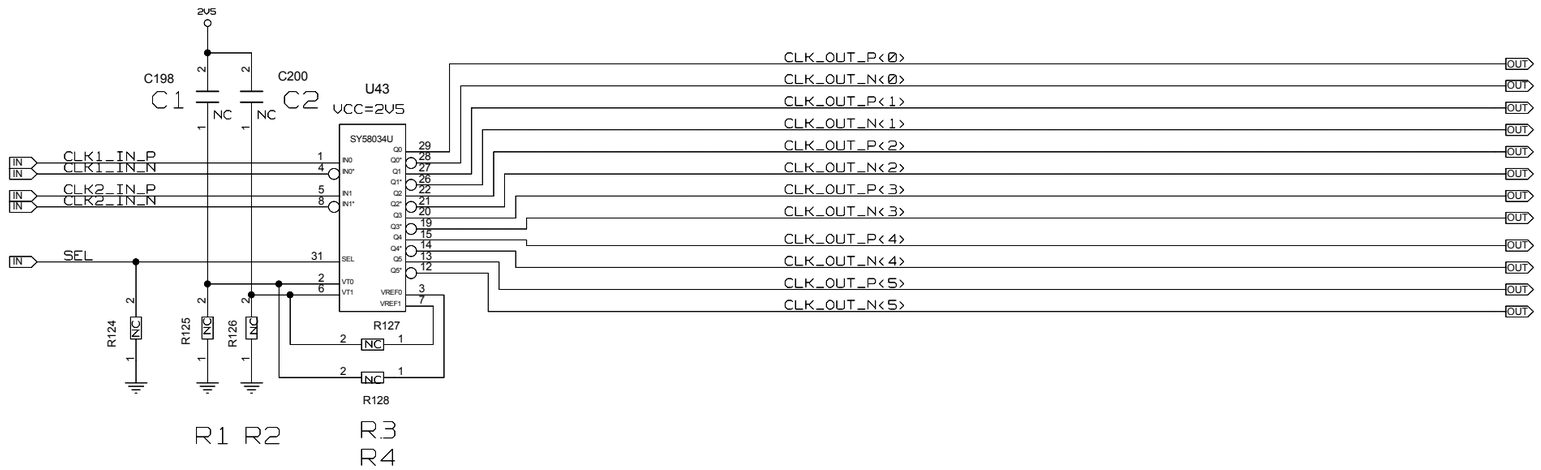

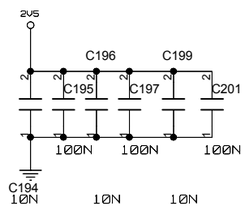

INPUT INTERFACE APPLICATIONS

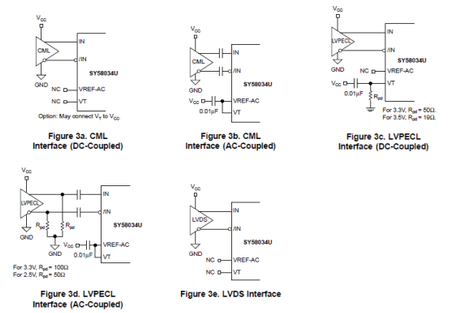

UNIVERSITY OF MAINZ	DRAWING TITLE CLOCK_CML_FANOUT6_DC		
BLOCK: CLOCK	SIZE C	REV.	DRAWING NO.
	SCALE		SHEET OF