REVISIONS				
ZONE	LTR	DESCRIPTION	DATE	APPR.

I1

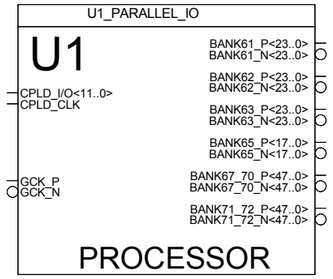

	NAME	DATE	SIGN
CHECKED	E.ROCCO		
CHECKED	U.SCHAEFER		
CHECKED	S.RAVE		
DRAWN	BAUSS		

BLOCK TITLE

DRAWING TITLE

UNIVERSITY OF MAINZ

SIZE C | REV. | DRAWING NO.

SCALE | SHEET OF

REVISIONS				
ZONE	LTR	DESCRIPTION	DATE	APPR.

I1

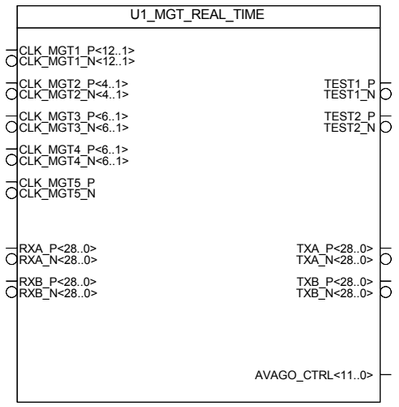

	NAME	DATE	SIGN
CHECKED	E.ROCCO		
CHECKED	U.SCHAEFER		
CHECKED	S.RAVE		
DRAWN	BAUSS		

BLOCK TITLE

DRAWING TITLE

UNIVERSITY OF MAINZ

SIZE C | REV. | DRAWING NO.

SCALE | SHEET OF

REVISIONS				
ZONE	LTR	DESCRIPTION	DATE	APPR.

I6

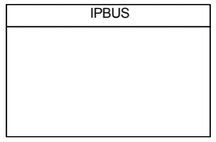

I2

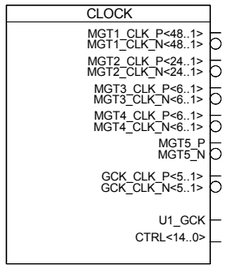

I3

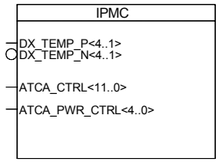

I7

I1

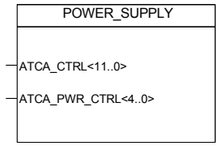

I4

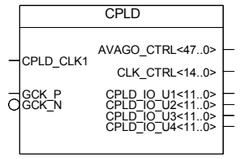

I5

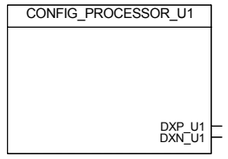

	NAME	DATE	SIGN
CHECKED	E.ROCCO		
CHECKED	U.SCHAEFER		
CHECKED	S.RAVE		
DRAWN	BAUSS		

BLOCK TITLE

DRAWING TITLE

UNIVERSITY OF MAINZ

SIZE	REV.	DRAWING NO.
C		
SCALE		SHEET OF

REVISIONS				
ZONE	LTR	DESCRIPTION	DATE	APPR.

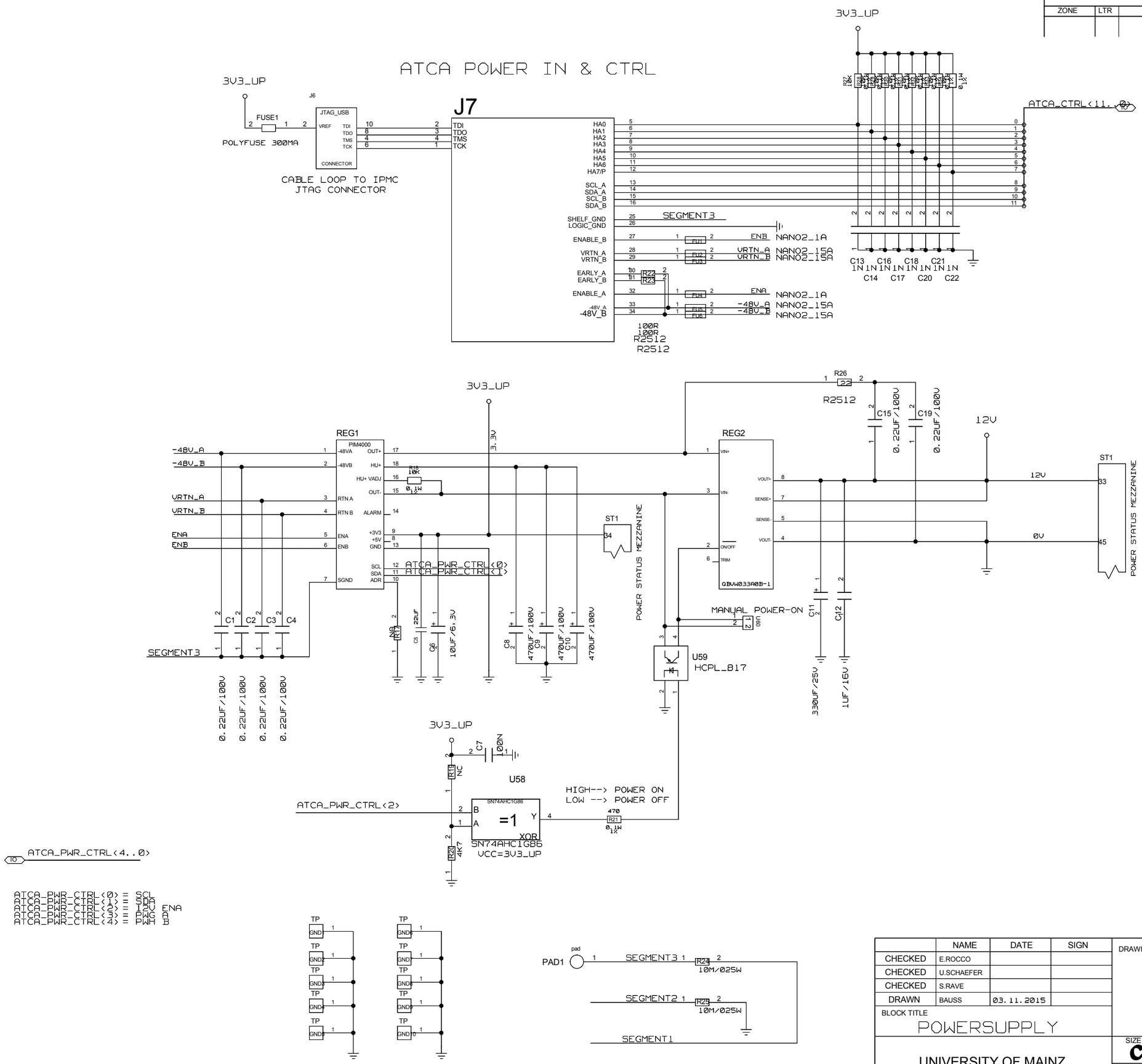

	NAME	DATE	SIGN
CHECKED	E.ROCCO		
CHECKED	U.SCHAEFER		
CHECKED	S.RAVE		
DRAWN	BAUSS	03.11.2015	

BLOCK TITLE

POWERSUPPLY

UNIVERSITY OF MAINZ

DRAWING TITLE

ATCA POWER

SIZE C | REV. | DRAWING NO.

SCALE | SHEET OF

REVISIONS				
ZONE	LTR	DESCRIPTION	DATE	APPR.

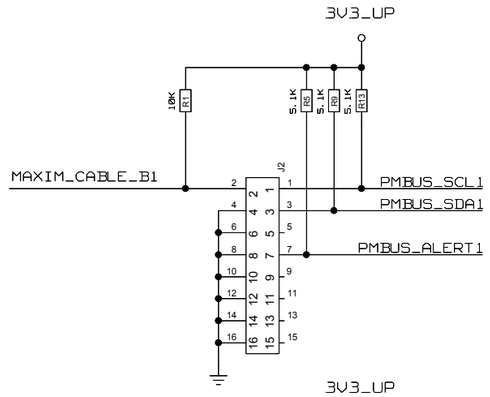

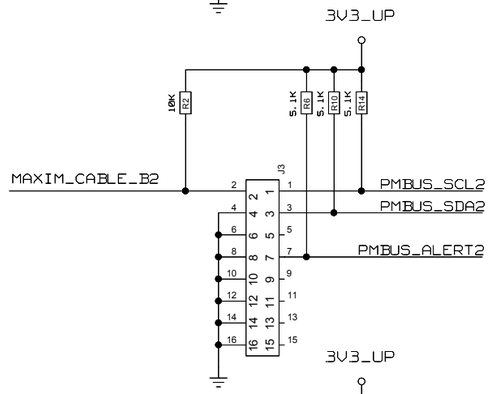

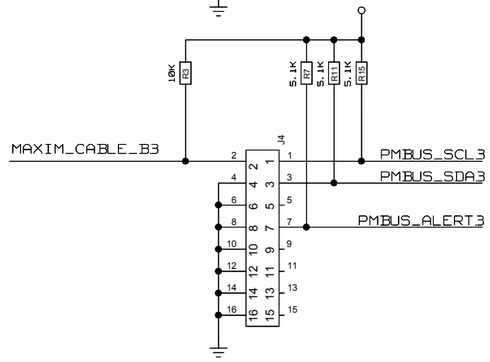

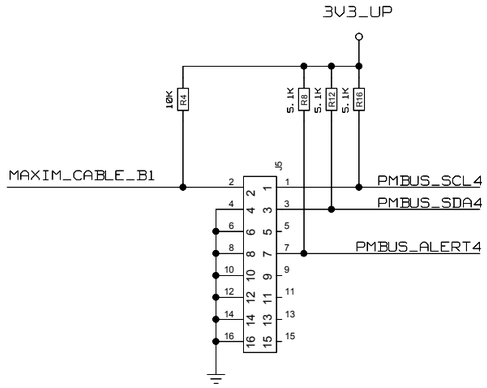

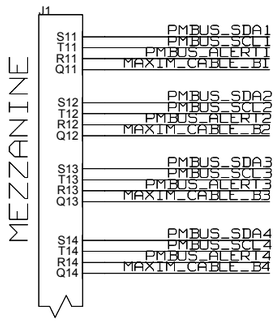

	NAME	DATE	SIGN
CHECKED	E.ROCCO		
CHECKED	U.SCHAEFER		
CHECKED	S.RAVE		
DRAWN	BAUSS		

BLOCK TITLE: POWERSUPPLY

DRAWING TITLE: PMBUS

BOARDLEVEL 3V3, 2V5

UNIVERSITY OF MAINZ

SIZE: C | REV. | DRAWING NO.

SCALE | SHEET OF

REVISIONS				
ZONE	LTR	DESCRIPTION	DATE	APPR.

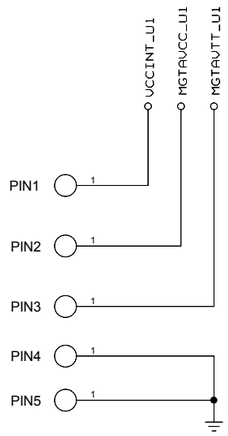

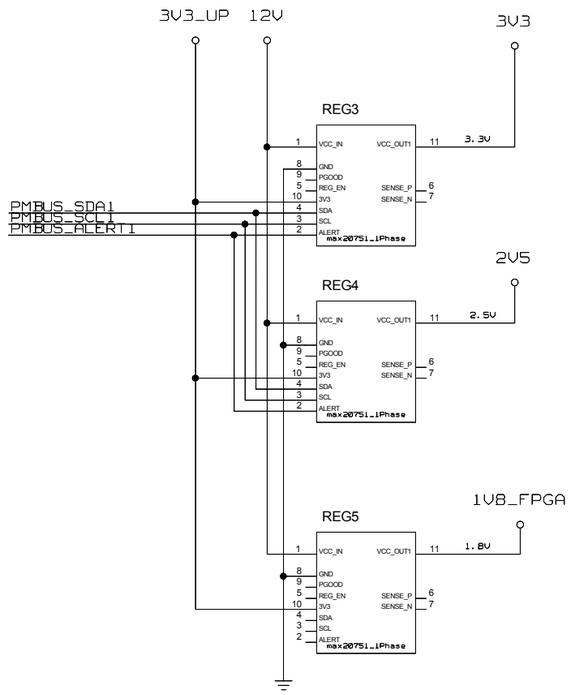

	NAME	DATE	SIGN
CHECKED	E.ROCCO		
CHECKED	U.SCHAEFER		
CHECKED	S.RAVE		
DRAWN	BAUSS		

BLOCK TITLE

DRAWING TITLE

UNIVERSITY OF MAINZ

SIZE C | REV. | DRAWING NO.

SCALE | SHEET OF

REVISIONS				
ZONE	LTR	DESCRIPTION	DATE	APPR.

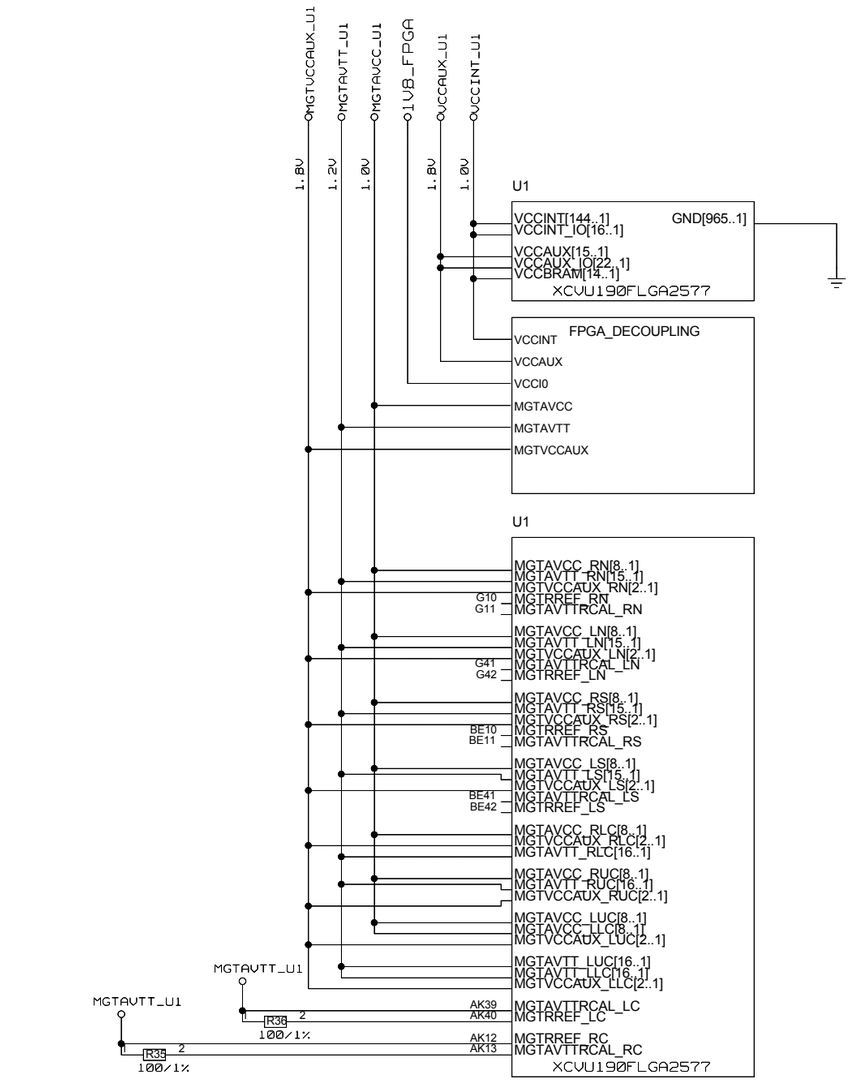

TRACE LENGTH FROM RESISTOR PINS
TO PIN SAME LENGTH
UG576 SHEET 297

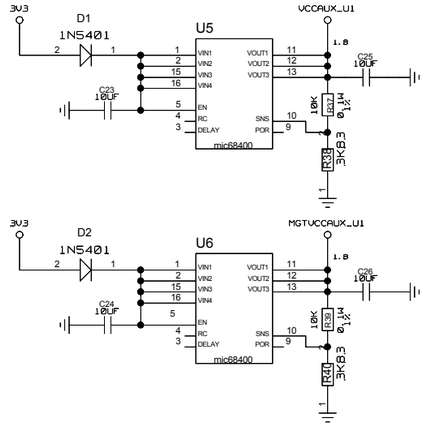

	NAME	DATE	SIGN
CHECKED	E.ROCCO		
CHECKED	U.SCHAEFER		
CHECKED	S.RAVE		
DRAWN	BAUSS		

BLOCK TITLE

DRAWING TITLE

UNIVERSITY OF MAINZ

SIZE C | REV. | DRAWING NO.

SCALE | SHEET OF

REVISIONS				
ZONE	LTR	DESCRIPTION	DATE	APPR.

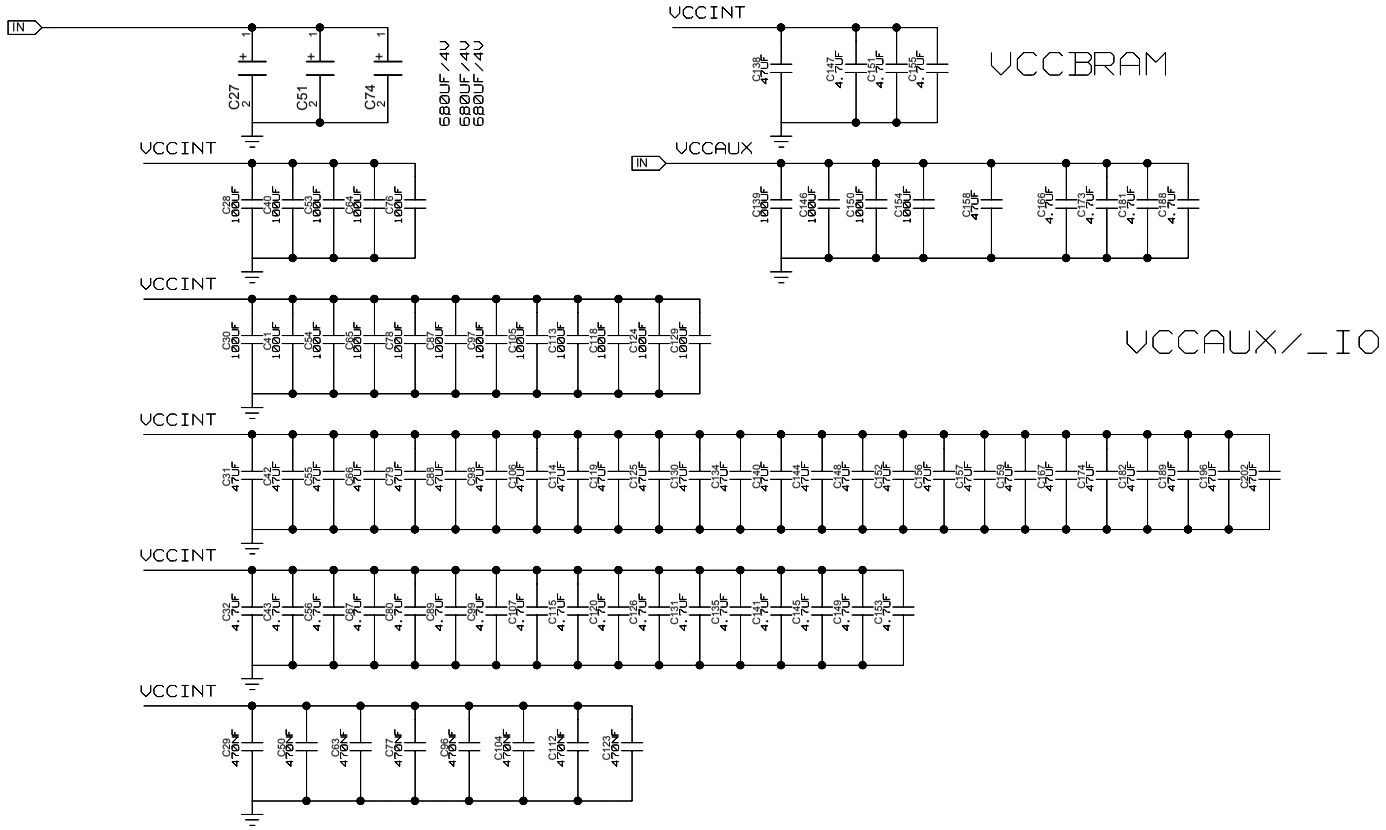

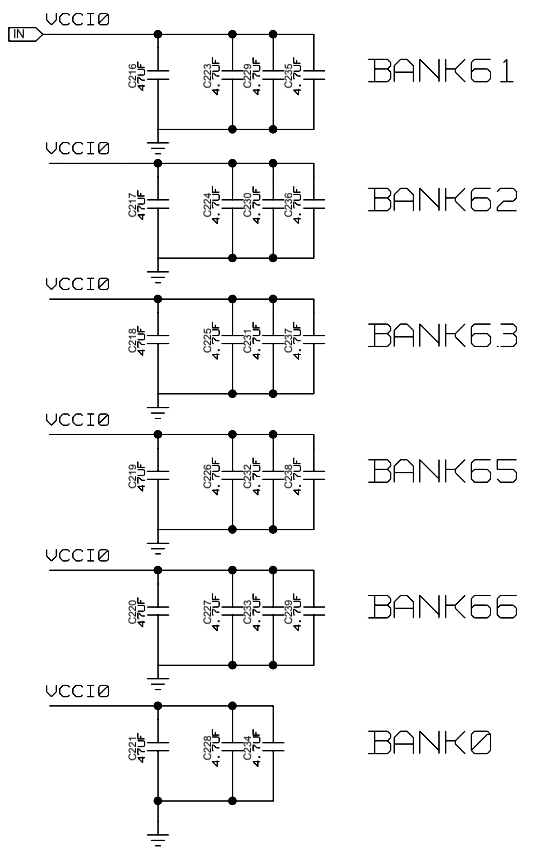

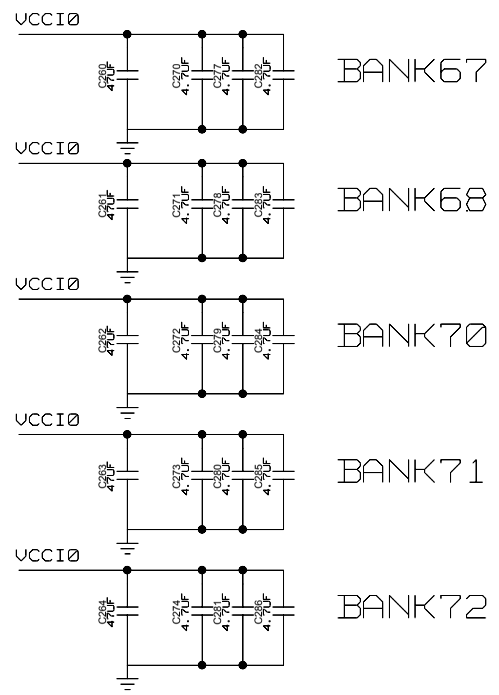

MGT DECOUPLING

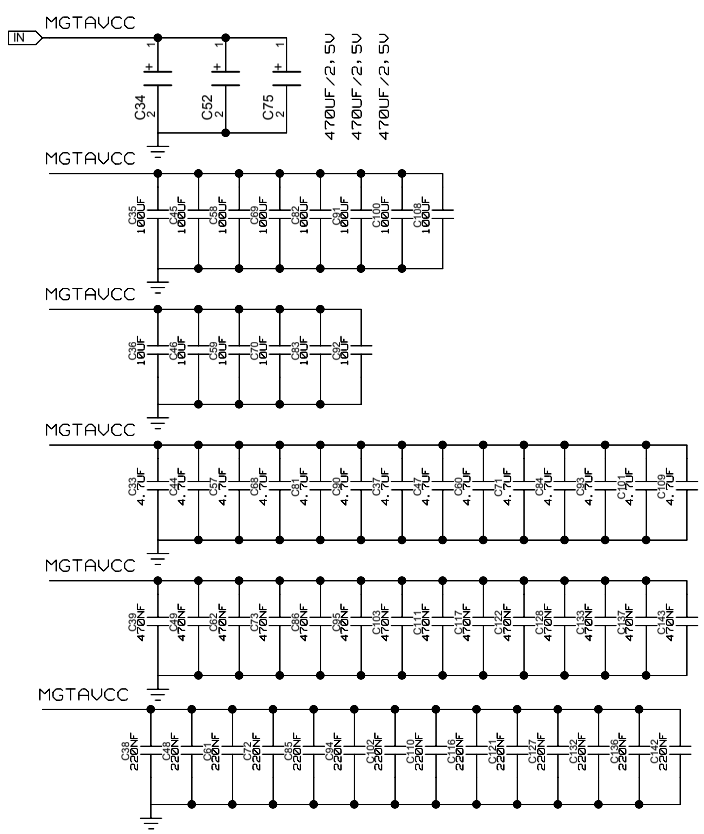

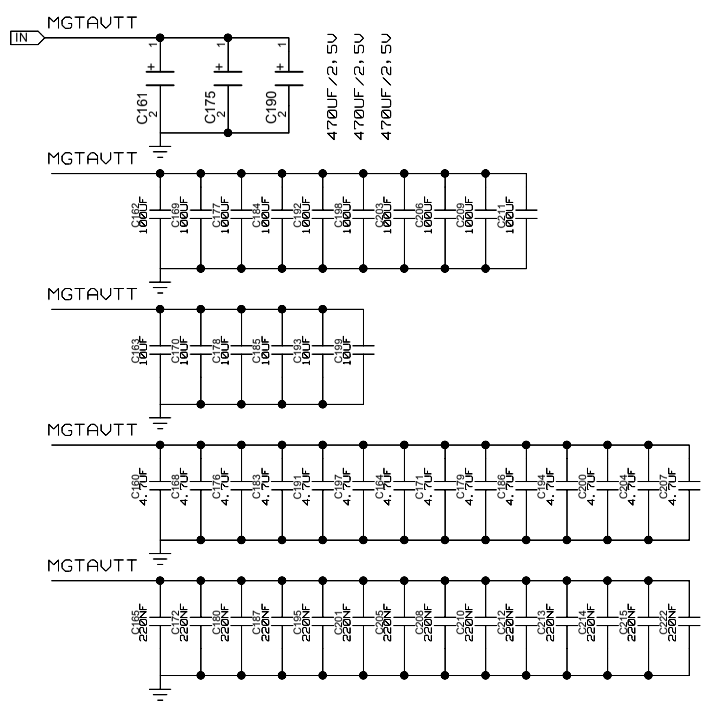

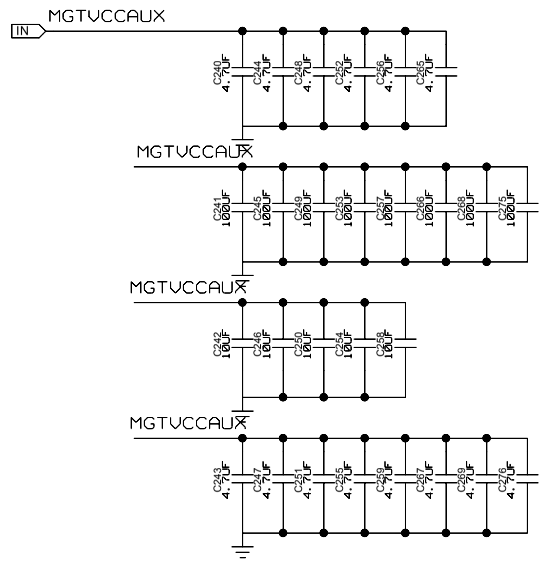

	NAME	DATE	SIGN
CHECKED	E.ROCCO		
CHECKED	U.SCHAEFER		
CHECKED	S.RAVE		
DRAWN	BAUSS		

BLOCK TITLE

DRAWING TITLE

UNIVERSITY OF MAINZ

SIZE	REV.	DRAWING NO.
C		
SCALE		SHEET OF

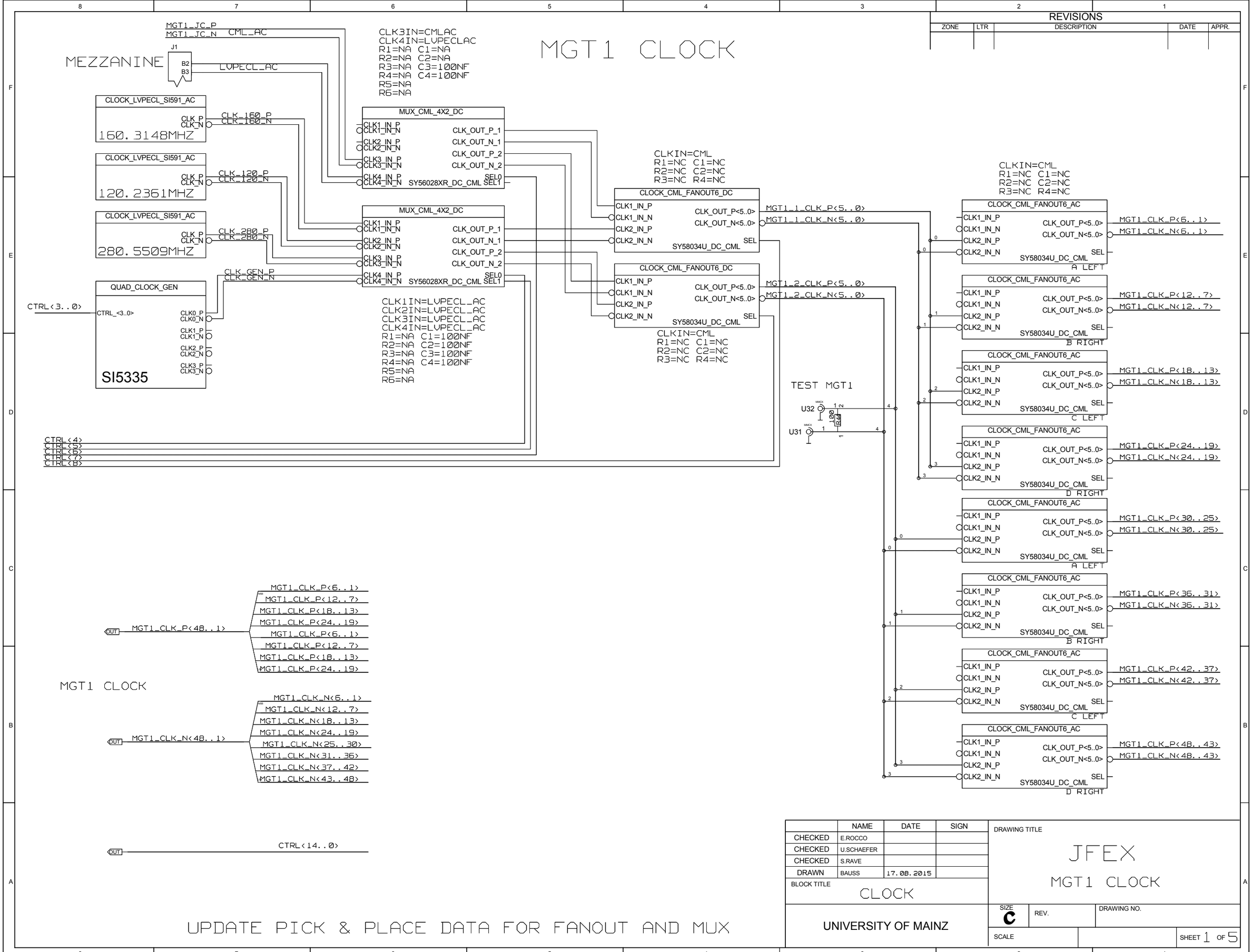

REVISIONS

ZONE	LTR	DESCRIPTION	DATE	APPR.

	NAME	DATE	SIGN
CHECKED	E.ROCCO		
CHECKED	U.SCHAEFER		
CHECKED	S.RAVE		
DRAWN	BAUSS	17.08.2015	

BLOCK TITLE: CLOCK

UNIVERSITY OF MAINZ

DRAWING TITLE: JFEX MGT1 CLOCK

SIZE: C | REV. | DRAWING NO.

SCALE | SHEET 1 OF 5

MGT2 CLOCK

REVISIONS				
ZONE	LTR	DESCRIPTION	DATE	APPR.

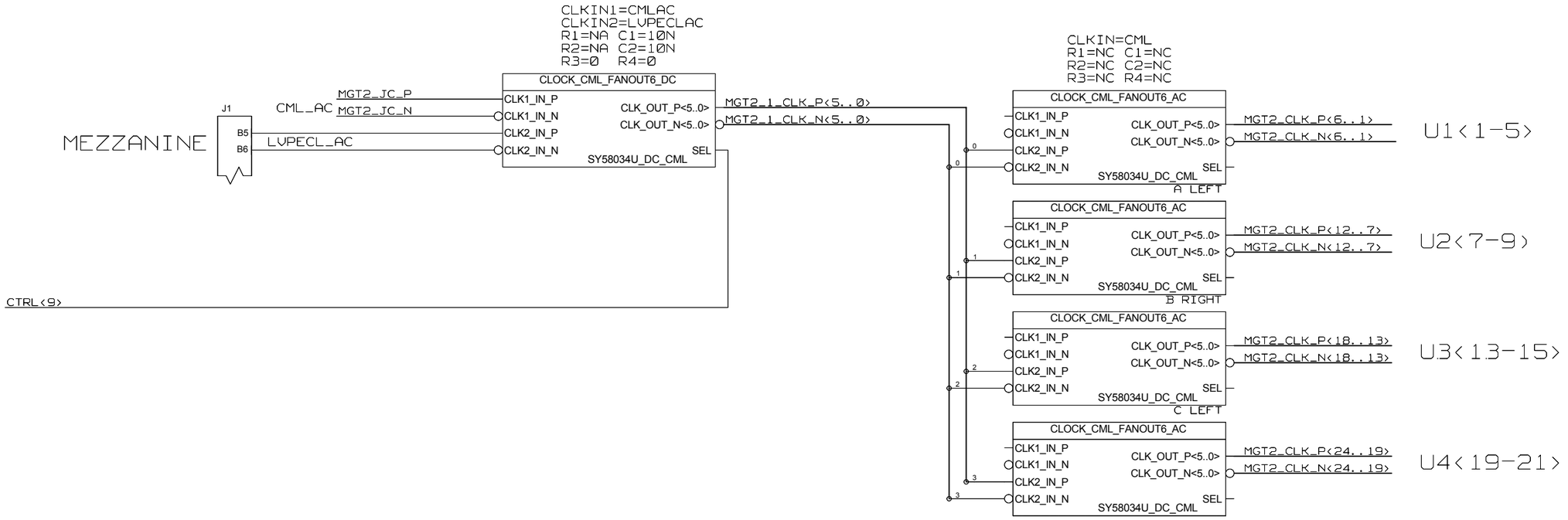

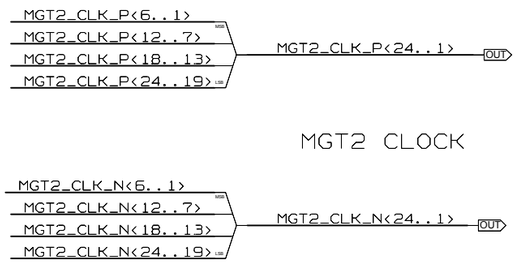

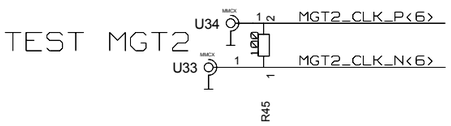

UPDATE PICK & PLACE DATA FOR FANOUT AND MUX

	NAME	DATE	SIGN
CHECKED	E.ROCCO		
CHECKED	U.SCHAEFER		
CHECKED	S.RAVE		
DRAWN	BAUSS	17.08.2015	

BLOCK TITLE: CLOCK

UNIVERSITY OF MAINZ

DRAWING TITLE: JFEX
MGT2 CLOCK

SIZE C | REV. | DRAWING NO.

SCALE | SHEET 2 OF 5

MGT3 CLOCK

REVISIONS				
ZONE	LTR	DESCRIPTION	DATE	APPR.

CLKIN1=CMLAC
CLKIN2=LVPECLAC
R1=NA C1=10N
R2=NA C2=10N
R3=0 R4=0

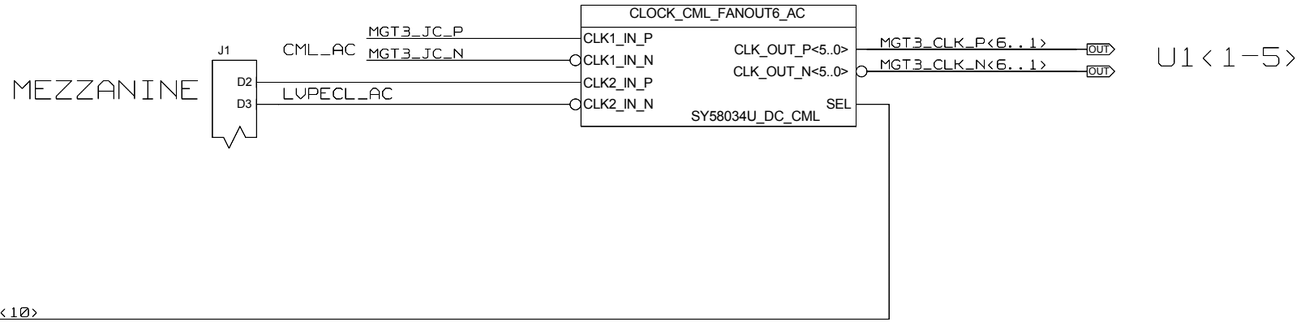

TEST MGT3

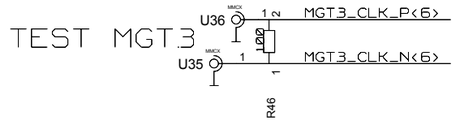

UPDATE PICK & PLACE DATA FOR FANOUT AND MUX

	NAME	DATE	SIGN
CHECKED	E.ROCCO		
CHECKED	U.SCHAEFER		
CHECKED	S.RAVE		
DRAWN	BAUSS	17.08.2015	

BLOCK TITLE: CLOCK

UNIVERSITY OF MAINZ

DRAWING TITLE: JFEX
MGT3 CLOCK

SIZE C | REV. | DRAWING NO.

SCALE | SHEET 3 OF 5

REVISIONS				
ZONE	LTR	DESCRIPTION	DATE	APPR.

MGT4 CLOCK

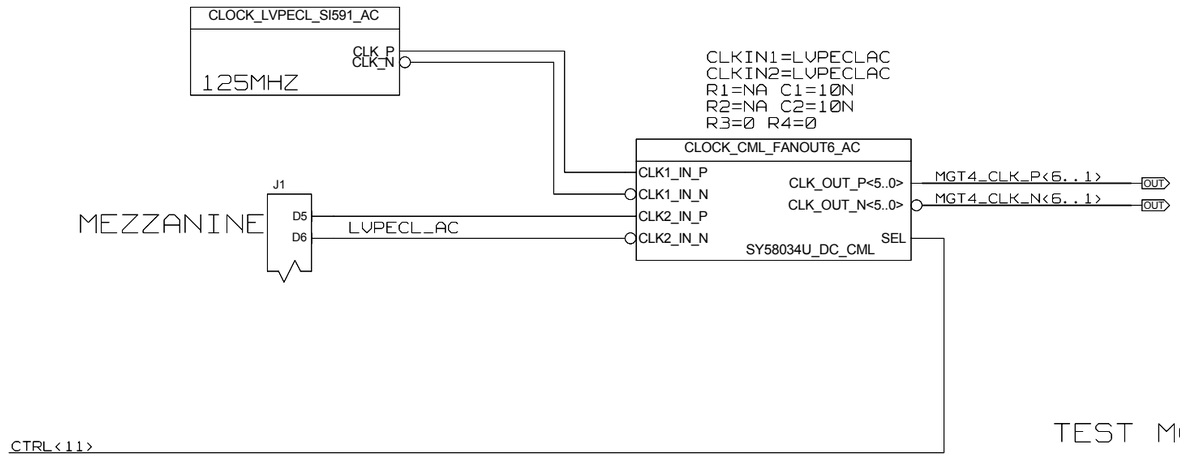

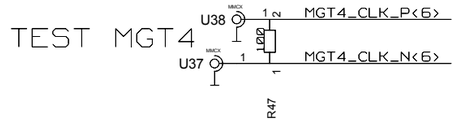

MGT5 CLOCK

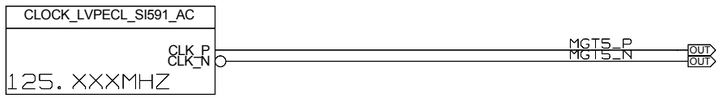

UPDATE PICK & PLACE DATA FOR FANOUT AND MUX

	NAME	DATE	SIGN
CHECKED	E.ROCCO		
CHECKED	U.SCHAEFER		
CHECKED	S.RAVE		
DRAWN	BAUSS	17.08.2015	

BLOCK TITLE: CLOCK

UNIVERSITY OF MAINZ

DRAWING TITLE: JFEX

MGT4 CLOCK

SIZE: C | REV. | DRAWING NO.

SCALE | SHEET 4 OF 5

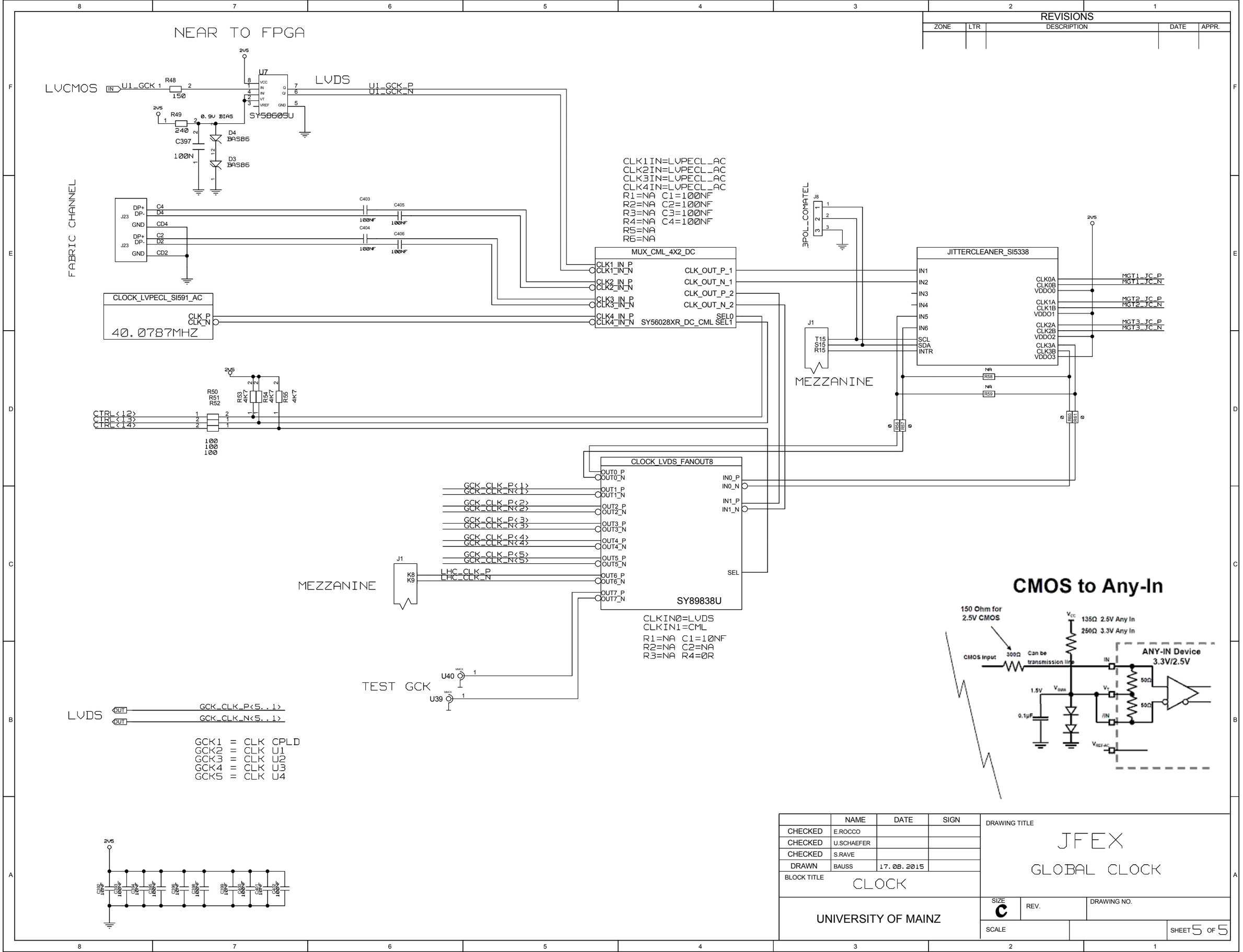

REVISIONS				
ZONE	LTR	DESCRIPTION	DATE	APPR.

	NAME	DATE	SIGN
CHECKED	E.ROCCO		
CHECKED	U.SCHAEFER		
CHECKED	S.RAVE		
DRAWN	BAUSS	17.08.2015	

BLOCK TITLE: CLOCK

DRAWING TITLE: JFEX GLOBAL CLOCK

UNIVERSITY OF MAINZ

SIZE: C | REV. | DRAWING NO.

SCALE | SHEET 5 OF 5

REVISIONS				
ZONE	LTR	DESCRIPTION	DATE	APPR.

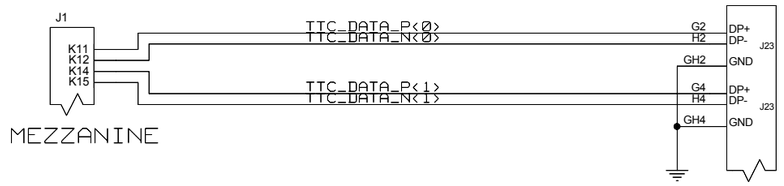

	NAME	DATE	SIGN
CHECKED	E.ROCCO		
CHECKED	U.SCHAEFER		
CHECKED	S.RAVE		
DRAWN	BAUSS	06.11.2015	

BLOCK TITLE: CLOCK

DRAWING TITLE: JFEX
TTC DATA

UNIVERSITY OF MAINZ

SIZE: C | REV. | DRAWING NO.

SCALE | SHEET OF

REVISIONS				
ZONE	LTR	DESCRIPTION	DATE	APPR.

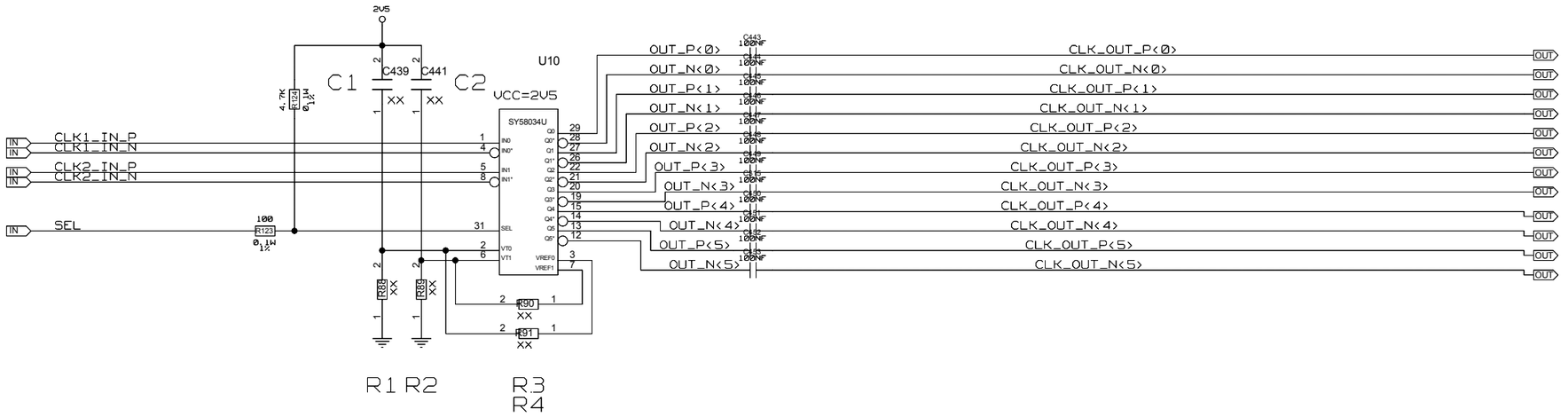

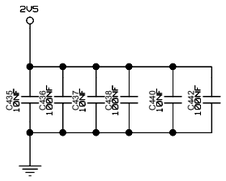

INPUT INTERFACE APPLICATIONS

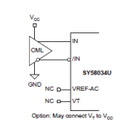

Figure 3a. CML Interface (DC-Coupled)

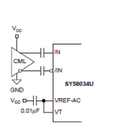

Figure 3b. CML Interface (AC-Coupled)

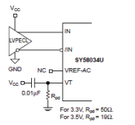

Figure 3c. LVPECL Interface (DC-Coupled)

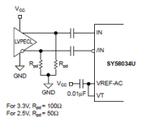

Figure 3d. LVPECL Interface (AC-Coupled)

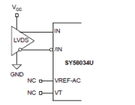

Figure 3e. LVDS Interface

	NAME	DATE	SIGN
CHECKED	E.ROCCO		
CHECKED	U.SCHAEFER		
CHECKED	S.RAVE		
DRAWN	BAUSS		

BLOCK TITLE

CLOCK CML FANOUT6 AC

DRAWING TITLE

CLOCK

UNIVERSITY OF MAINZ

SIZE	REV.	DRAWING NO.
C		
SCALE		SHEET OF

REVISIONS				
ZONE	LTR	DESCRIPTION	DATE	APPR.

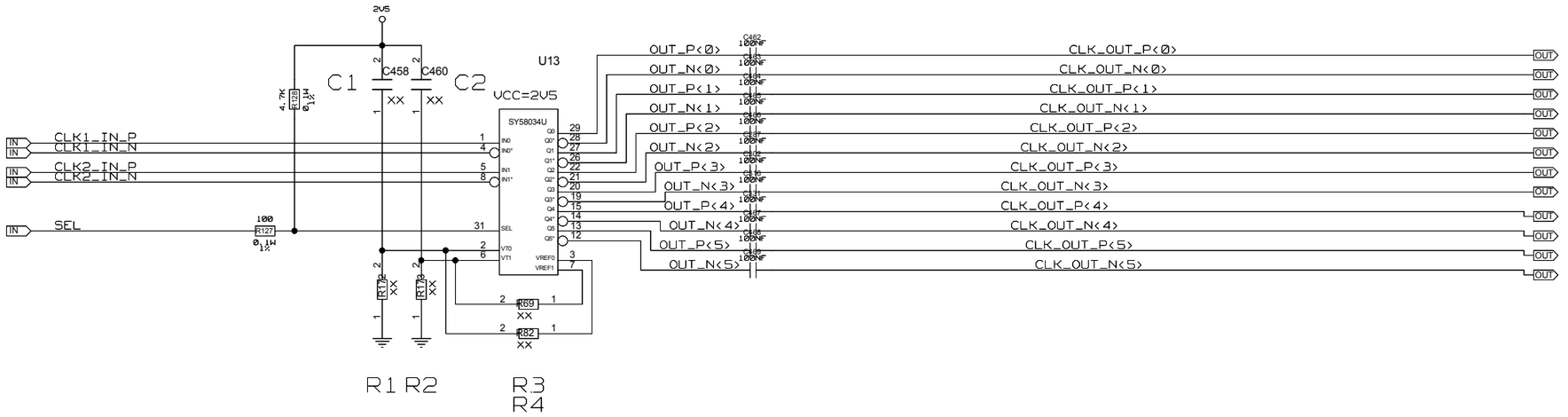

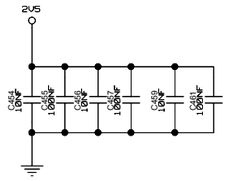

INPUT INTERFACE APPLICATIONS

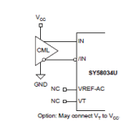

Figure 3a. CML Interface (DC-Coupled)

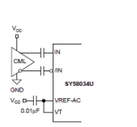

Figure 3b. CML Interface (AC-Coupled)

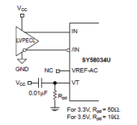

Figure 3c. LVPECL Interface (DC-Coupled)

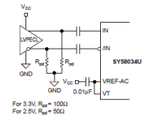

Figure 3d. LVPECL Interface (AC-Coupled)

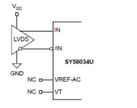

Figure 3e. LVDS Interface

	NAME	DATE	SIGN
CHECKED	E.ROCCO		
CHECKED	U.SCHAEFER		
CHECKED	S.RAVE		
DRAWN	BAUSS		

BLOCK TITLE

CLOCK CML FANOUT6 AC

DRAWING TITLE

CLOCK

UNIVERSITY OF MAINZ

SIZE	REV.	DRAWING NO.
C		
SCALE		SHEET OF

REVISIONS				
ZONE	LTR	DESCRIPTION	DATE	APPR.

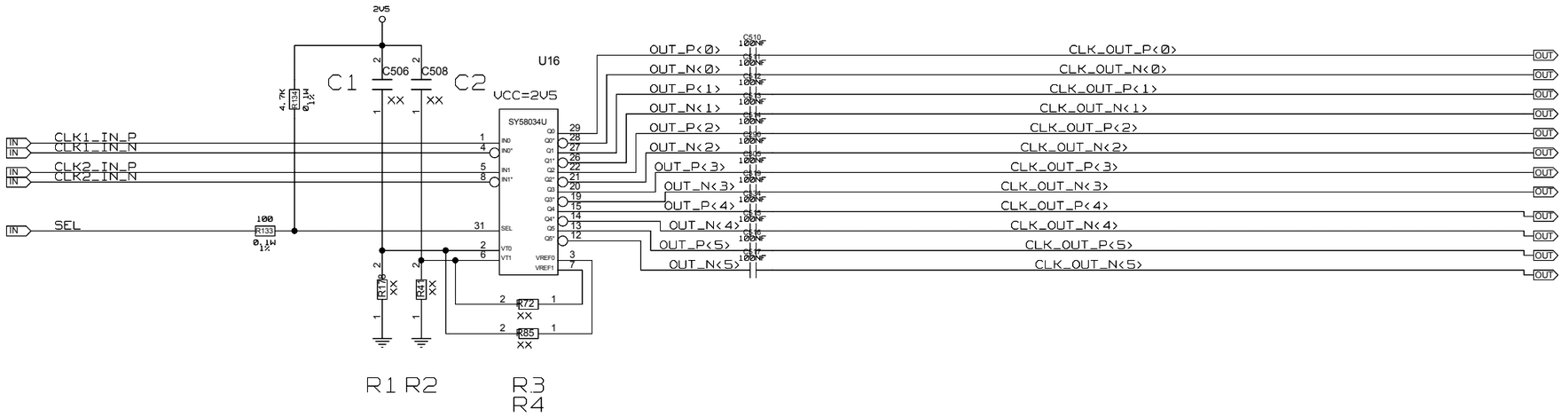

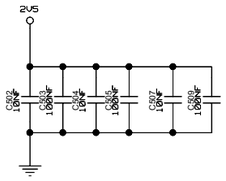

INPUT INTERFACE APPLICATIONS

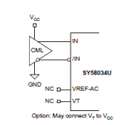

Figure 3a. CML Interface (DC-Coupled)

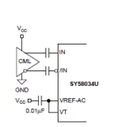

Figure 3b. CML Interface (AC-Coupled)

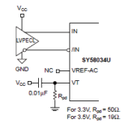

Figure 3c. LVPECL Interface (DC-Coupled)

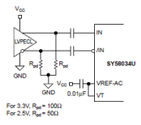

Figure 3d. LVPECL Interface (AC-Coupled)

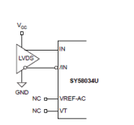

Figure 3e. LVDS Interface

	NAME	DATE	SIGN
CHECKED	E.ROCCO		
CHECKED	U.SCHAEFER		
CHECKED	S.RAVE		
DRAWN	BAUSS		

BLOCK TITLE

CLOCK CML FANOUT6 AC

DRAWING TITLE

CLOCK

UNIVERSITY OF MAINZ

SIZE	REV.	DRAWING NO.
C		
SCALE		SHEET OF

REVISIONS				
ZONE	LTR	DESCRIPTION	DATE	APPR.

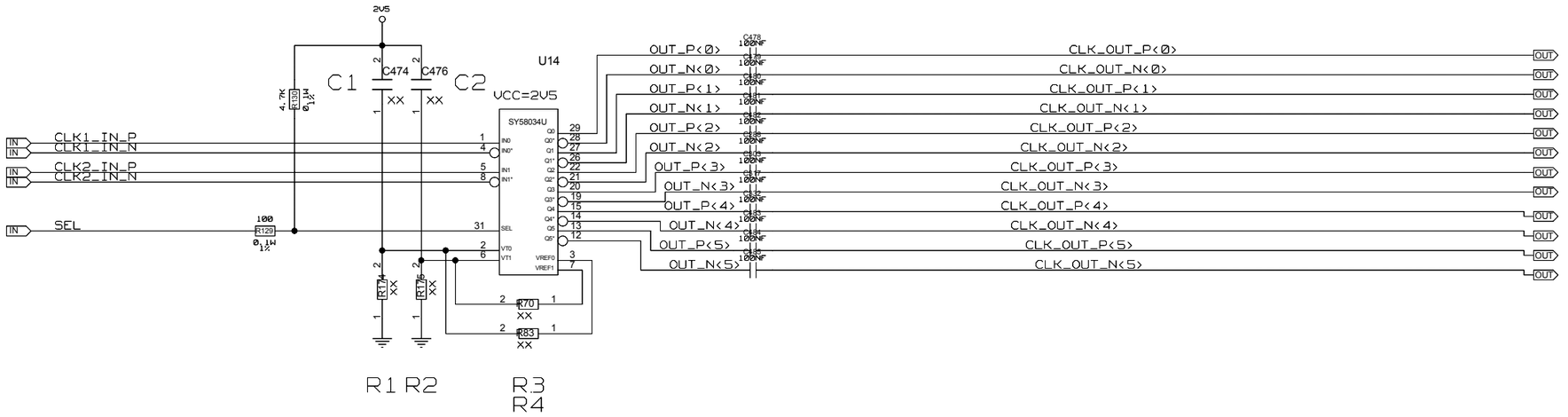

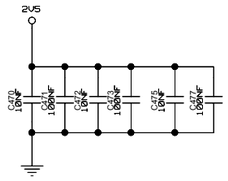

INPUT INTERFACE APPLICATIONS

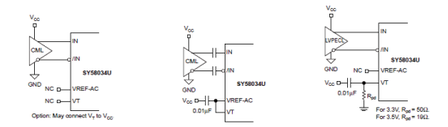

Figure 3a. CML Interface (DC-Coupled)

Figure 3b. CML Interface (AC-Coupled)

Figure 3c. LVPECL Interface (DC-Coupled)

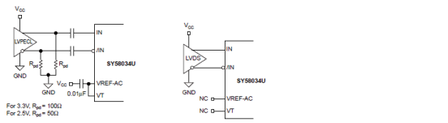

Figure 3d. LVPECL Interface (AC-Coupled)

Figure 3e. LVDS Interface

	NAME	DATE	SIGN
CHECKED	E.ROCCO		
CHECKED	U.SCHAEFER		
CHECKED	S.RAVE		
DRAWN	BAUSS		

BLOCK TITLE

CLOCK CML FANOUT6 AC

DRAWING TITLE

CLOCK

UNIVERSITY OF MAINZ

SIZE	REV.	DRAWING NO.
C		
SCALE		SHEET OF

REVISIONS				
ZONE	LTR	DESCRIPTION	DATE	APPR.

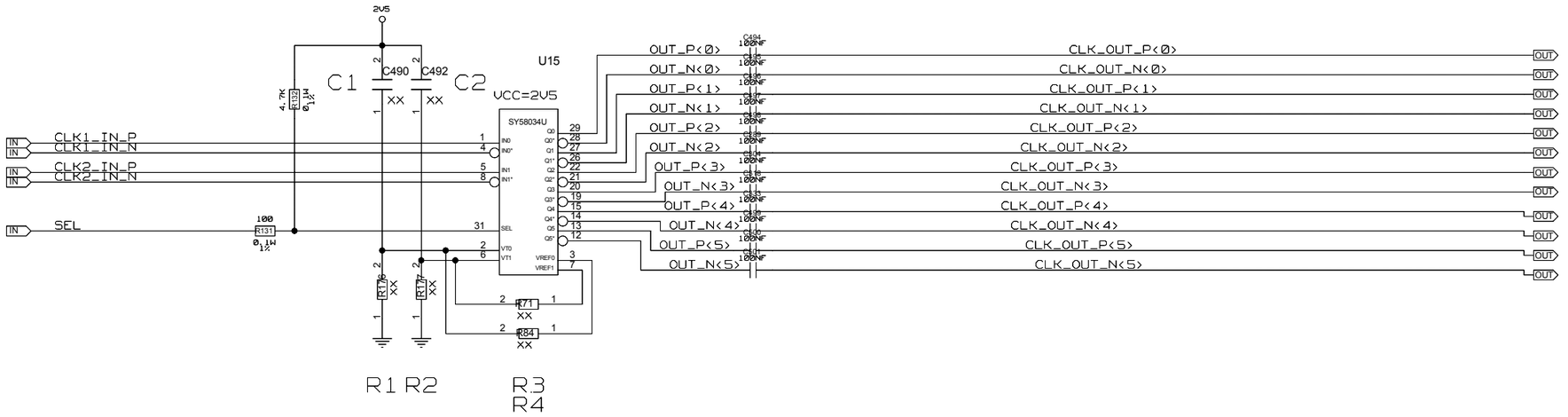

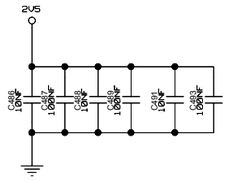

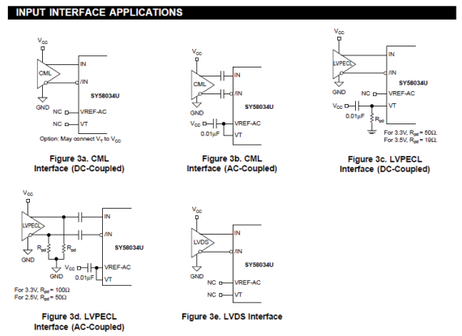

	NAME	DATE	SIGN
CHECKED	E.ROCCO		
CHECKED	U.SCHAEFER		
CHECKED	S.RAVE		
DRAWN	BAUSS		

BLOCK TITLE

CLOCK CML FANOUT6 AC

DRAWING TITLE

CLOCK

UNIVERSITY OF MAINZ

SIZE	REV.	DRAWING NO.
C		
SCALE		SHEET OF

REVISIONS				
ZONE	LTR	DESCRIPTION	DATE	APPR.

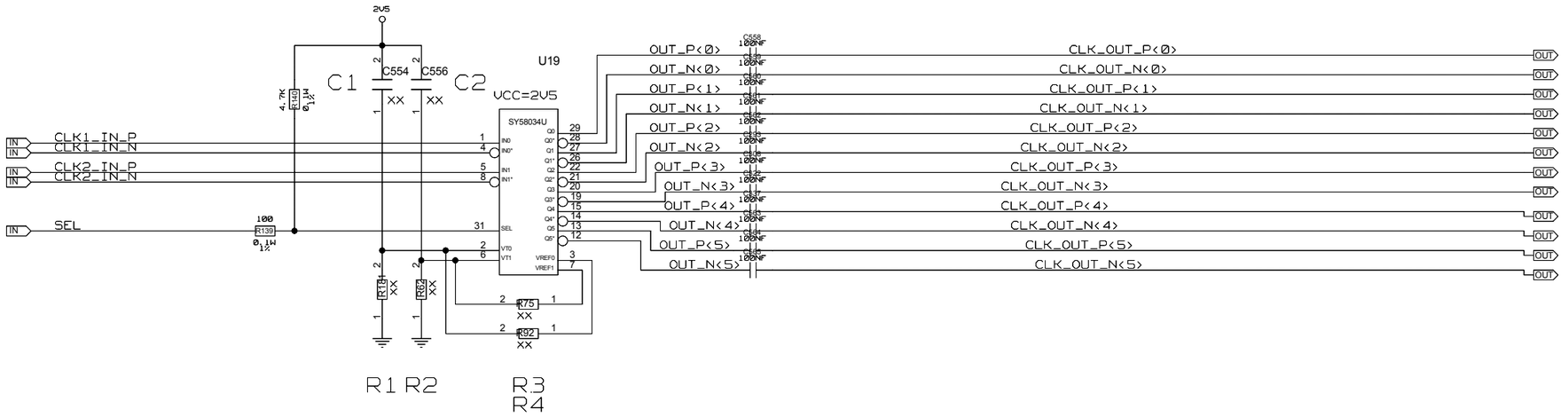

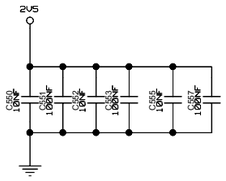

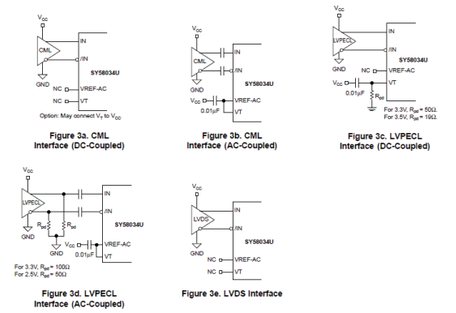

	NAME	DATE	SIGN
CHECKED	E.ROCCO		
CHECKED	U.SCHAEFER		
CHECKED	S.RAVE		
DRAWN	BAUSS		

BLOCK TITLE: CLOCK CML FANOUT6 AC

DRAWING TITLE: CLOCK

UNIVERSITY OF MAINZ

SIZE: C | REV. | DRAWING NO.

SCALE | SHEET OF

REVISIONS				
ZONE	LTR	DESCRIPTION	DATE	APPR.

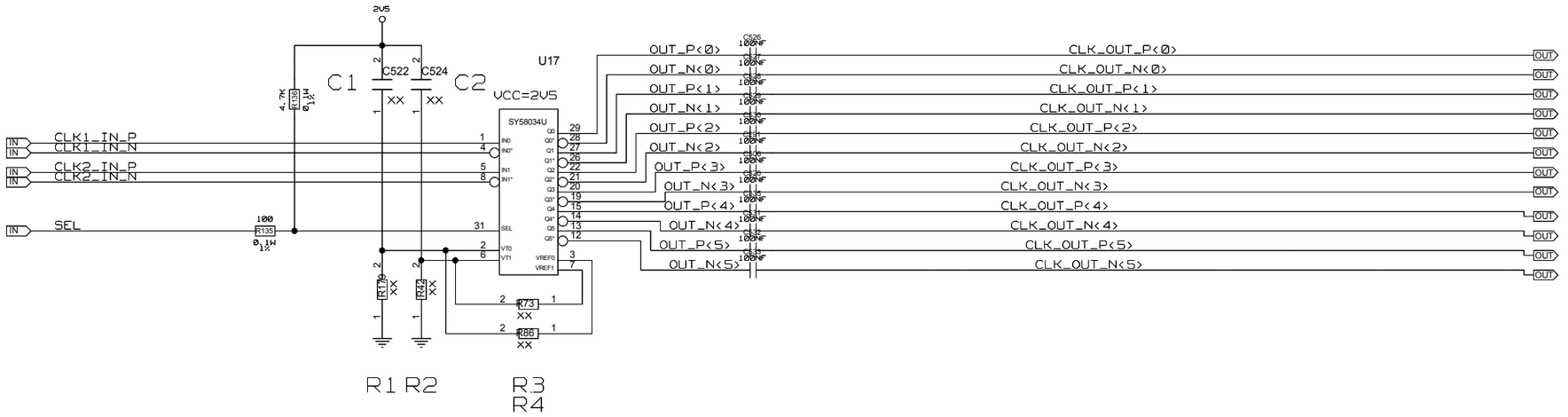

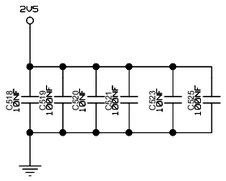

INPUT INTERFACE APPLICATIONS

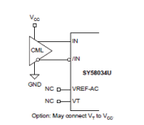

Figure 3a. CML Interface (DC-Coupled)

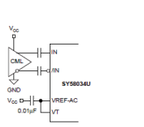

Figure 3b. CML Interface (AC-Coupled)

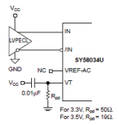

Figure 3c. LVPECL Interface (DC-Coupled)

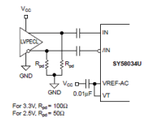

Figure 3d. LVPECL Interface (AC-Coupled)

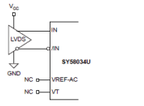

Figure 3e. LVDS Interface

	NAME	DATE	SIGN
CHECKED	E.ROCCO		
CHECKED	U.SCHAEFER		
CHECKED	S.RAVE		
DRAWN	BAUSS		

BLOCK TITLE: CLOCK CML FANOUT6 AC

DRAWING TITLE: CLOCK

UNIVERSITY OF MAINZ

SIZE: C | REV. | DRAWING NO.

SCALE | SHEET OF

REVISIONS				
ZONE	LTR	DESCRIPTION	DATE	APPR.

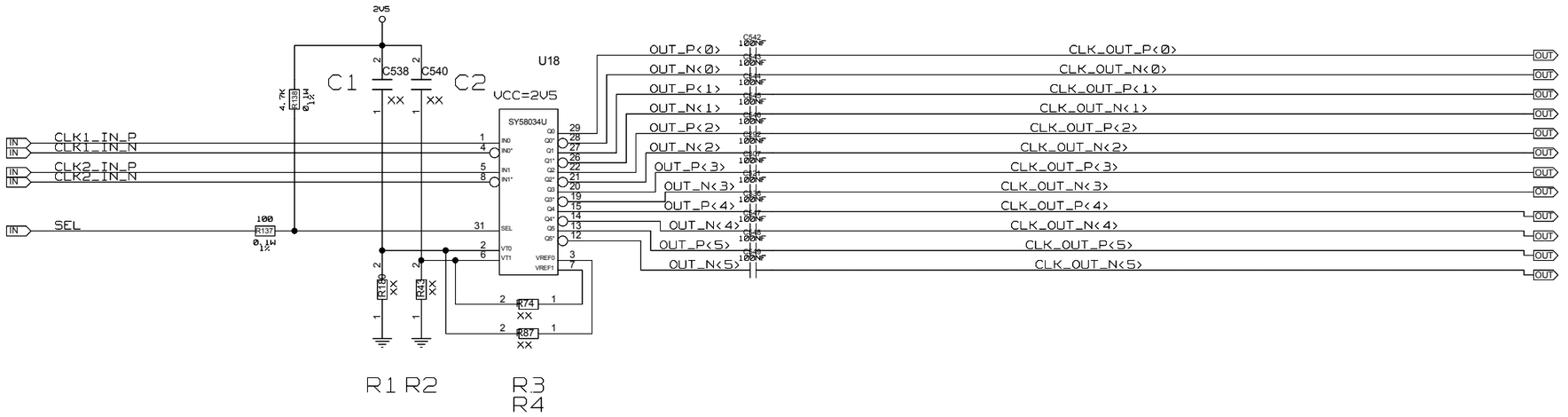

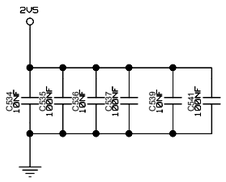

INPUT INTERFACE APPLICATIONS

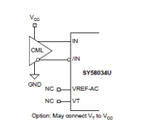

Figure 3a. CML Interface (DC-Coupled)

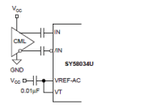

Figure 3b. CML Interface (AC-Coupled)

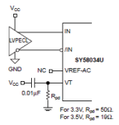

Figure 3c. LVPECL Interface (DC-Coupled)

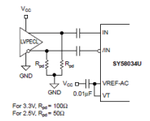

Figure 3d. LVPECL Interface (AC-Coupled)

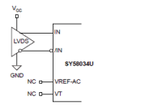

Figure 3e. LVDS Interface

	NAME	DATE	SIGN
CHECKED	E.ROCCO		
CHECKED	U.SCHAEFER		
CHECKED	S.RAVE		
DRAWN	BAUSS		

BLOCK TITLE

CLOCK CML FANOUT6 AC

DRAWING TITLE

CLOCK

UNIVERSITY OF MAINZ

SIZE	REV.	DRAWING NO.
C		
SCALE		SHEET OF

REVISIONS				
ZONE	LTR	DESCRIPTION	DATE	APPR.

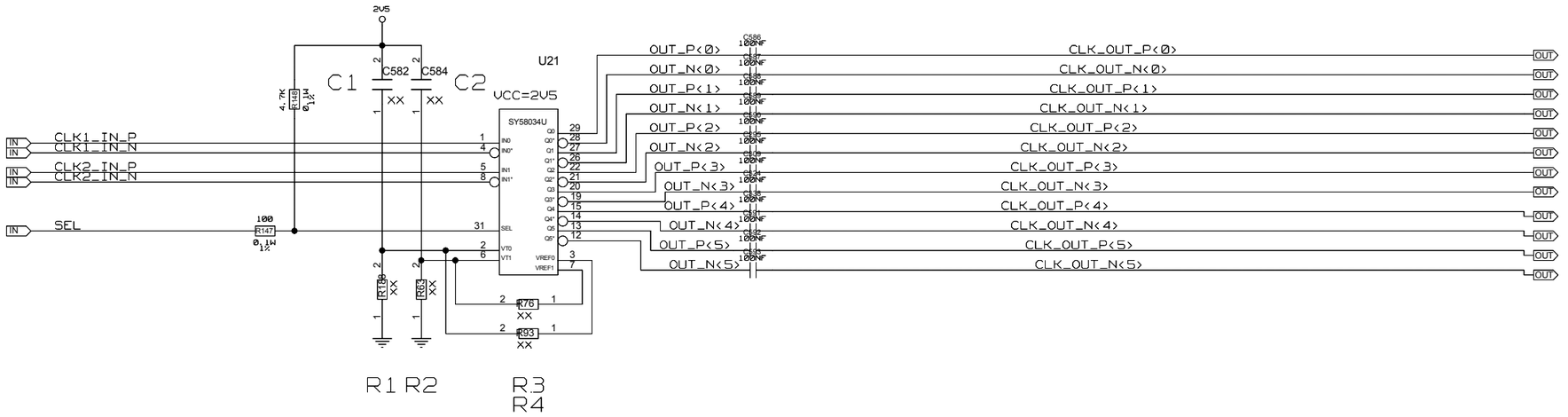

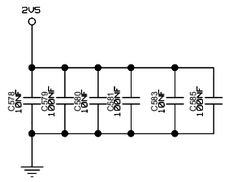

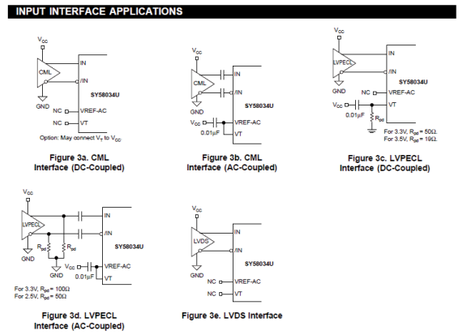

	NAME	DATE	SIGN
CHECKED	E.ROCCO		
CHECKED	U.SCHAEFER		
CHECKED	S.RAVE		
DRAWN	BAUSS		

BLOCK TITLE

CLOCK CML FANOUT6 AC

DRAWING TITLE

CLOCK

UNIVERSITY OF MAINZ

SIZE	REV.	DRAWING NO.
C		
SCALE		SHEET OF

REVISIONS				
ZONE	LTR	DESCRIPTION	DATE	APPR.

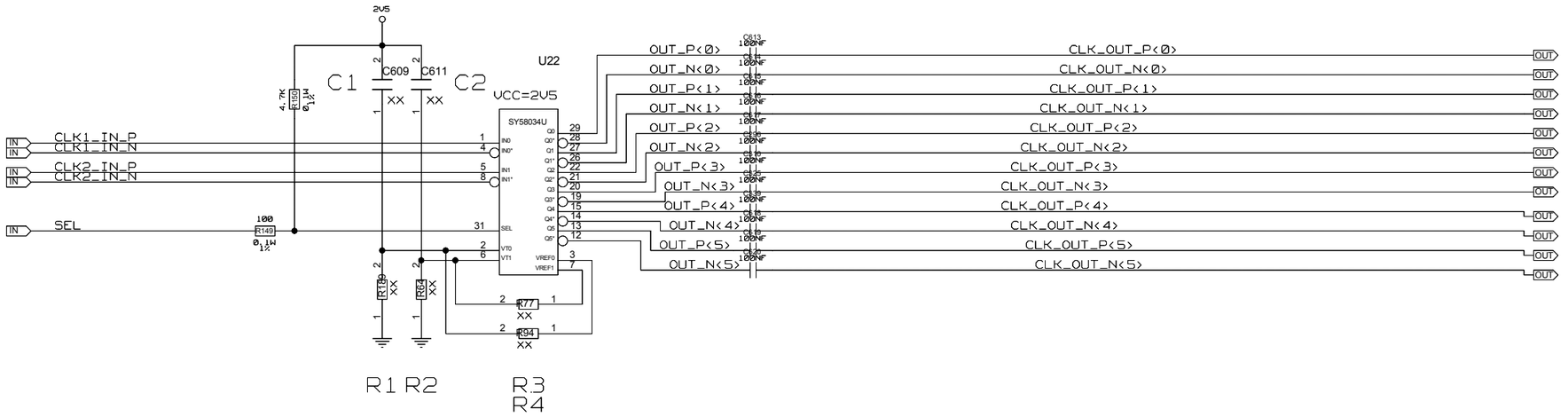

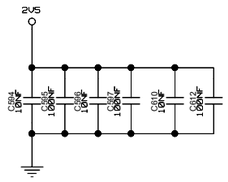

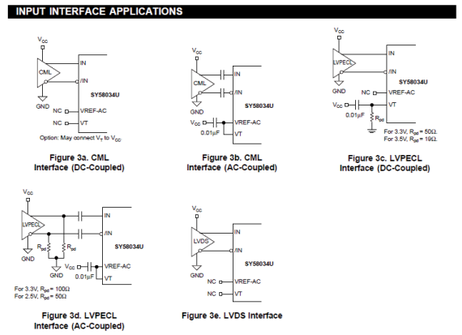

	NAME	DATE	SIGN
CHECKED	E.ROCCO		
CHECKED	U.SCHAEFER		
CHECKED	S.RAVE		
DRAWN	BAUSS		

BLOCK TITLE

CLOCK CML FANOUT6 AC

DRAWING TITLE

CLOCK

UNIVERSITY OF MAINZ

SIZE	REV.	DRAWING NO.
C		
SCALE		SHEET OF

REVISIONS				
ZONE	LTR	DESCRIPTION	DATE	APPR.

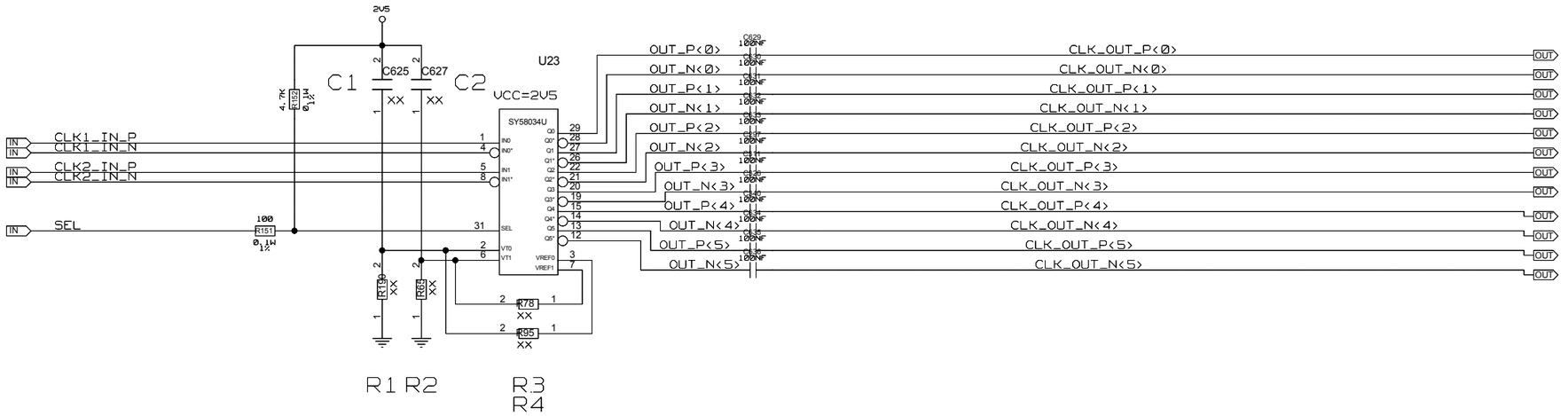

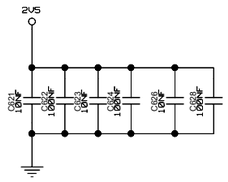

INPUT INTERFACE APPLICATIONS

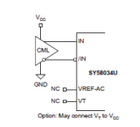

Figure 3a. CML Interface (DC-Coupled)

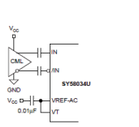

Figure 3b. CML Interface (AC-Coupled)

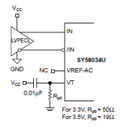

Figure 3c. LVPECL Interface (DC-Coupled)

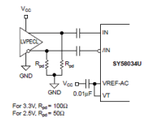

Figure 3d. LVPECL Interface (AC-Coupled)

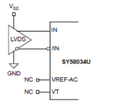

Figure 3e. LVDS Interface

	NAME	DATE	SIGN
CHECKED	E.ROCCO		
CHECKED	U.SCHAEFER		
CHECKED	S.RAVE		
DRAWN	BAUSS		

BLOCK TITLE

CLOCK CML FANOUT6 AC

DRAWING TITLE

CLOCK

UNIVERSITY OF MAINZ

SIZE	REV.	DRAWING NO.
C		
SCALE		SHEET OF

REVISIONS				
ZONE	LTR	DESCRIPTION	DATE	APPR.

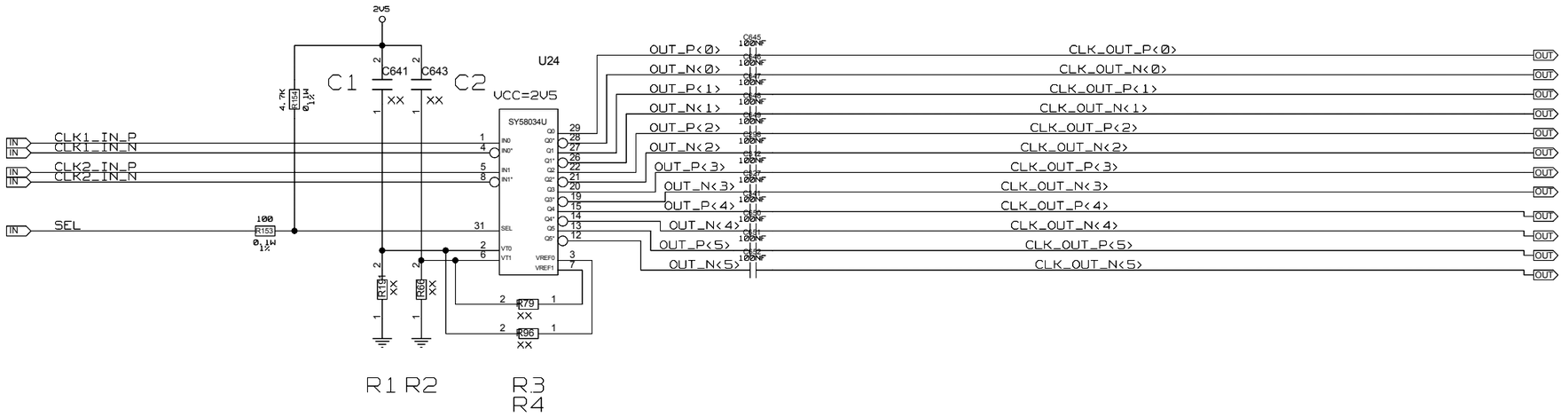

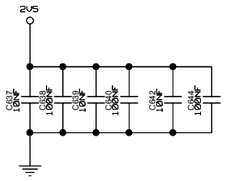

INPUT INTERFACE APPLICATIONS

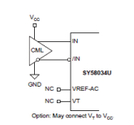

Figure 3a. CML Interface (DC-Coupled)

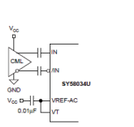

Figure 3b. CML Interface (AC-Coupled)

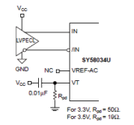

Figure 3c. LVPECL Interface (DC-Coupled)

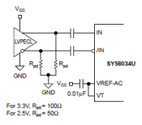

Figure 3d. LVPECL Interface (AC-Coupled)

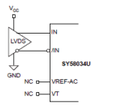

Figure 3e. LVDS Interface

	NAME	DATE	SIGN
CHECKED	E.ROCCO		
CHECKED	U.SCHAEFER		
CHECKED	S.RAVE		
DRAWN	BAUSS		

BLOCK TITLE

CLOCK CML FANOUT6 AC

DRAWING TITLE

CLOCK

UNIVERSITY OF MAINZ

SIZE	REV.	DRAWING NO.
C		
SCALE		SHEET OF

REVISIONS				
ZONE	LTR	DESCRIPTION	DATE	APPR.

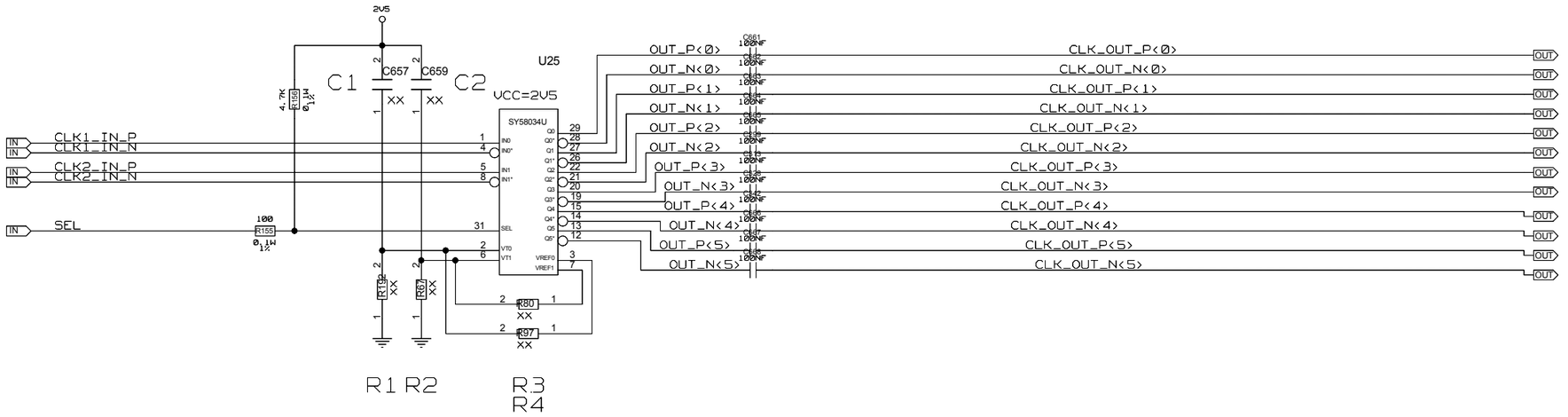

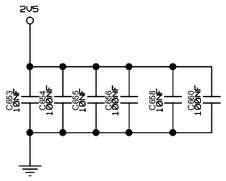

INPUT INTERFACE APPLICATIONS

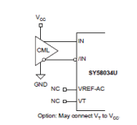

Figure 3a. CML Interface (DC-Coupled)

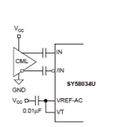

Figure 3b. CML Interface (AC-Coupled)

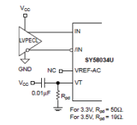

Figure 3c. LVPECL Interface (DC-Coupled)

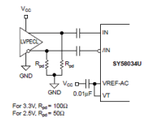

Figure 3d. LVPECL Interface (AC-Coupled)

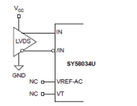

Figure 3e. LVDS Interface

	NAME	DATE	SIGN
CHECKED	E.ROCCO		
CHECKED	U.SCHAEFER		
CHECKED	S.RAVE		
DRAWN	BAUSS		

BLOCK TITLE

CLOCK CML FANOUT6 AC

DRAWING TITLE

CLOCK

UNIVERSITY OF MAINZ

SIZE	REV.	DRAWING NO.
C		
SCALE		SHEET OF

REVISIONS				
ZONE	LTR	DESCRIPTION	DATE	APPR.

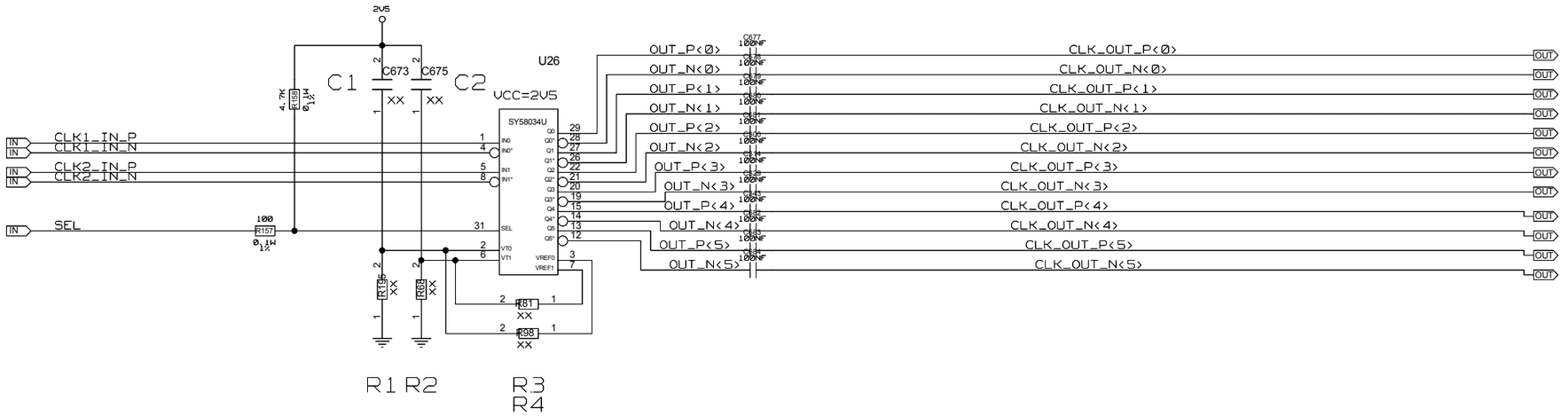

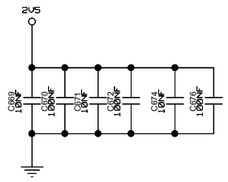

INPUT INTERFACE APPLICATIONS

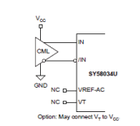

Figure 3a. CML Interface (DC-Coupled)

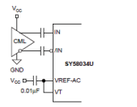

Figure 3b. CML Interface (AC-Coupled)

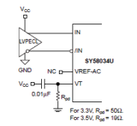

Figure 3c. LVPECL Interface (DC-Coupled)

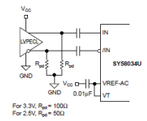

Figure 3d. LVPECL Interface (AC-Coupled)

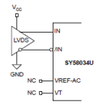

Figure 3e. LVDS Interface

	NAME	DATE	SIGN
CHECKED	E.ROCCO		
CHECKED	U.SCHAEFER		
CHECKED	S.RAVE		
DRAWN	BAUSS		

BLOCK TITLE

CLOCK CML FANOUT6 AC

DRAWING TITLE

CLOCK

UNIVERSITY OF MAINZ

SIZE	REV.	DRAWING NO.
C		
SCALE		SHEET OF

REVISIONS				
ZONE	LTR	DESCRIPTION	DATE	APPR.

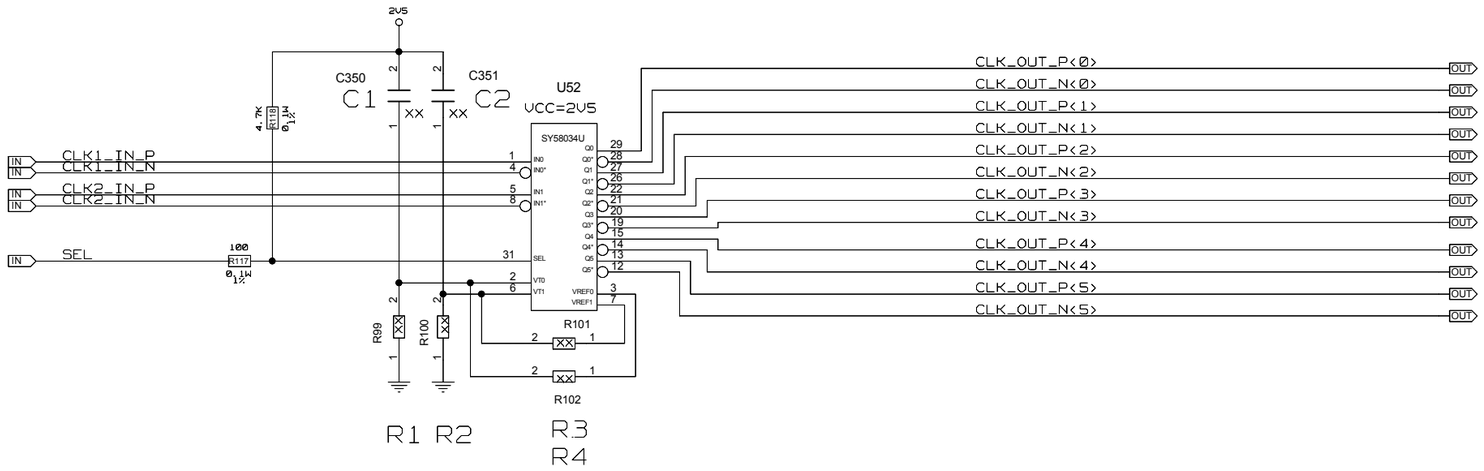

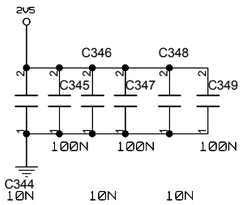

INPUT INTERFACE APPLICATIONS

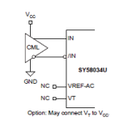

Figure 3a. CML Interface (DC-Coupled)

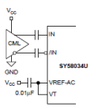

Figure 3b. CML Interface (AC-Coupled)

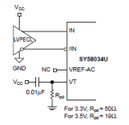

Figure 3c. LVPECL Interface (DC-Coupled)

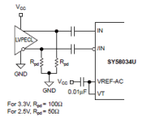

Figure 3d. LVPECL Interface (AC-Coupled)

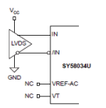

Figure 3e. LVDS Interface

	NAME	DATE	SIGN
CHECKED	E.ROCCO		
CHECKED	U.SCHAEFER		
CHECKED	S.RAVE		
DRAWN	BAUSS		

BLOCK TITLE
CLOCK_CML_FANOUT6_DC

DRAWING TITLE
CLOCK

UNIVERSITY OF MAINZ

SIZE	REV.	DRAWING NO.
C		

SCALE | SHEET OF

REVISIONS				
ZONE	LTR	DESCRIPTION	DATE	APPR.

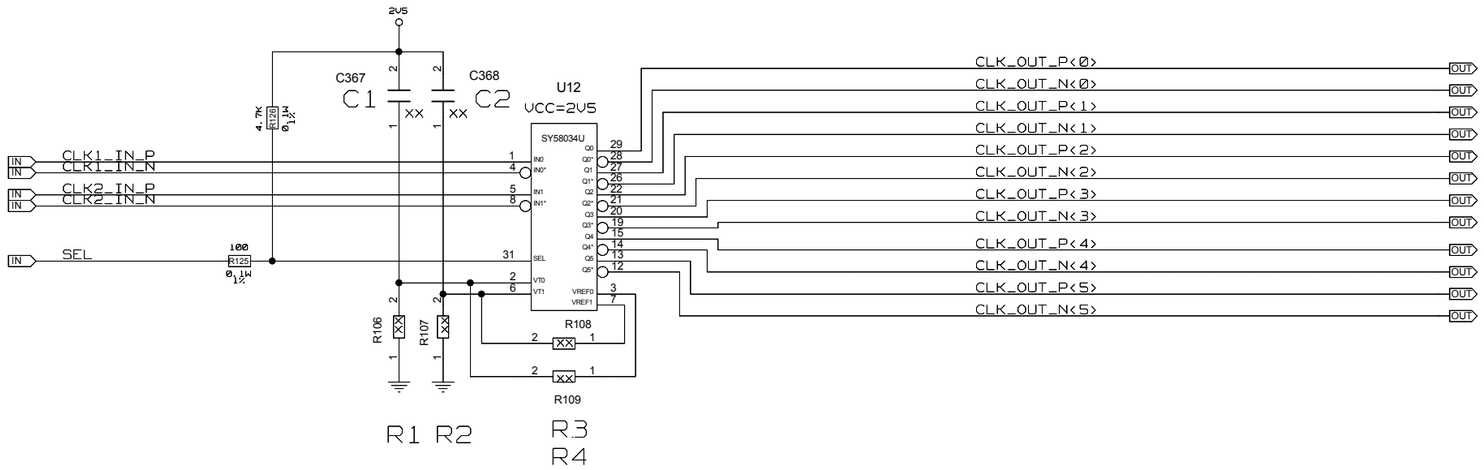

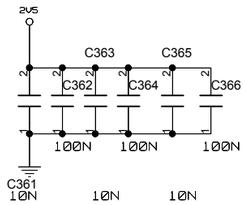

INPUT INTERFACE APPLICATIONS

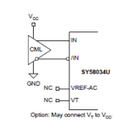

Figure 3a. CML Interface (DC-Coupled)

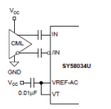

Figure 3b. CML Interface (AC-Coupled)

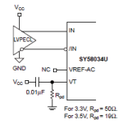

Figure 3c. LVPECL Interface (DC-Coupled)

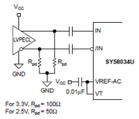

Figure 3d. LVPECL Interface (AC-Coupled)

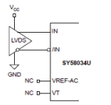

Figure 3e. LVDS Interface

	NAME	DATE	SIGN
CHECKED	E.ROCCO		
CHECKED	U.SCHAEFER		
CHECKED	S.RAVE		
DRAWN	BAUSS		

BLOCK TITLE
CLOCK_CML_FANOUT6_DC

DRAWING TITLE
CLOCK

UNIVERSITY OF MAINZ

SIZE	REV.	DRAWING NO.
C		

SCALE | SHEET OF

REVISIONS				
ZONE	LTR	DESCRIPTION	DATE	APPR.

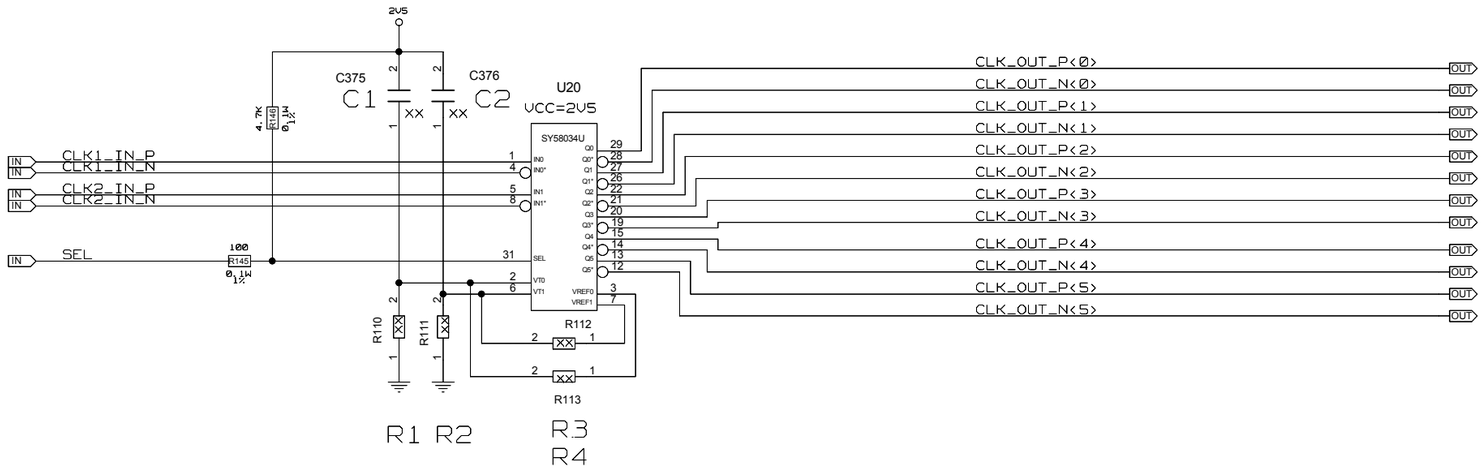

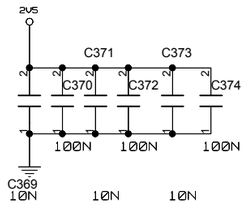

INPUT INTERFACE APPLICATIONS

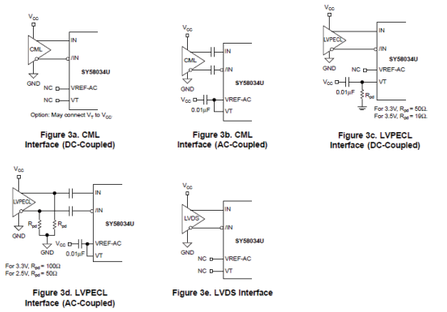

Figure 3a. CML Interface (DC-Coupled)

Figure 3b. CML Interface (AC-Coupled)

Figure 3c. LVPECL Interface (DC-Coupled)

Figure 3d. LVPECL Interface (AC-Coupled)

Figure 3e. LVDS Interface

	NAME	DATE	SIGN
CHECKED	E.ROCCO		
CHECKED	U.SCHAEFER		
CHECKED	S.RAVE		
DRAWN	BAUSS		

BLOCK TITLE
CLOCK_CML_FANOUT6_DC

DRAWING TITLE
CLOCK

UNIVERSITY OF MAINZ

SIZE	REV.	DRAWING NO.
C		

SCALE | SHEET OF

REVISIONS				
ZONE	LTR	DESCRIPTION	DATE	APPR.

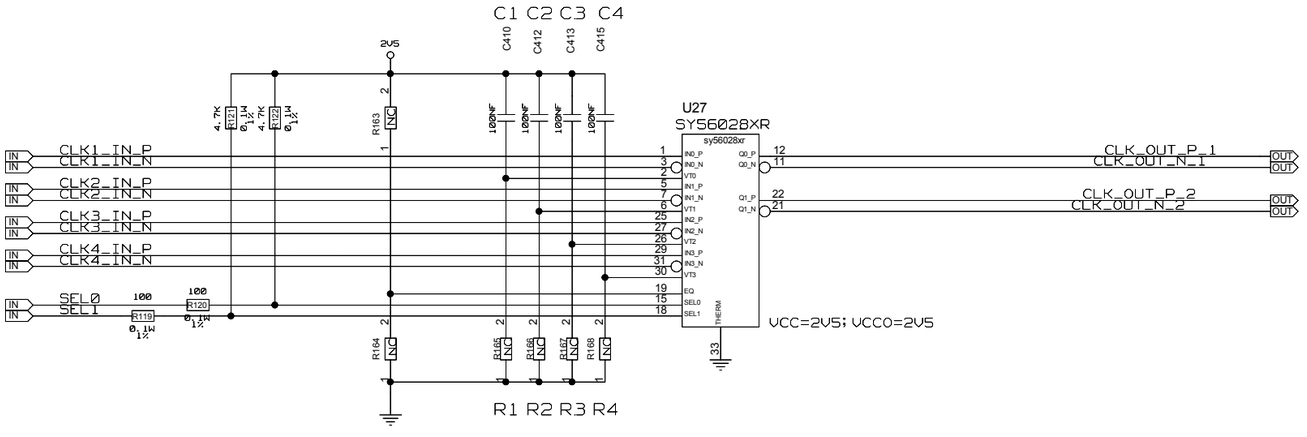

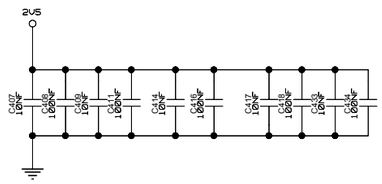

Input Interface Applications

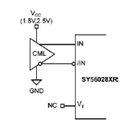

Figure 4a. CML Interface
100 Ω Differential
(DC-Coupled, 1.8V, 2.5V)

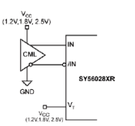

Figure 4b. CML Interface
50 Ω to Vcc
(DC-Coupled, 1.2V,1.8V,2.5V)

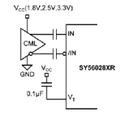

Figure 4c. CML Interface
(AC-Coupled)
*See note in Functional Description
for 1.2V CML driver with AC-Coupling

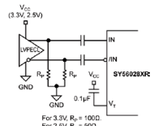

Figure 4d. LVPECL Interface
(AC-Coupled)

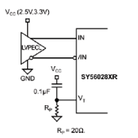

Figure 4e. LVPECL Interface
(DC-Coupled 2.5V and 3.3V)

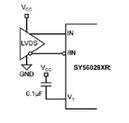

Figure 4f. LVDS Interface

	NAME	DATE	SIGN
CHECKED	E.ROCCO		
CHECKED	U.SCHAEFER		
CHECKED	S.RAVE		
DRAWN	BAUSS		

BLOCK TITLE
MUX_CML_4X2_DC

DRAWING TITLE
CLOCK

UNIVERSITY OF MAINZ

SIZE	REV.	DRAWING NO.
C		
SCALE		SHEET OF

REVISIONS				
ZONE	LTR	DESCRIPTION	DATE	APPR.

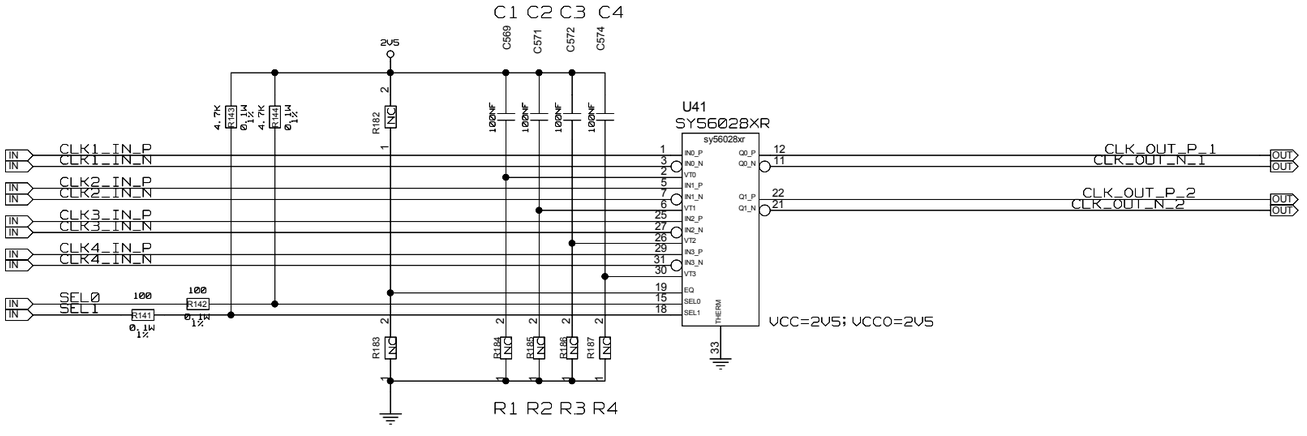

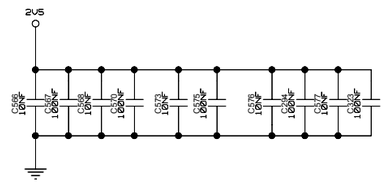

Input Interface Applications

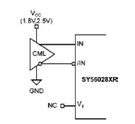

Figure 4a. CML Interface
100 Ω Differential
(DC-Coupled, 1.8V, 2.5V)

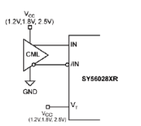

Figure 4b. CML Interface
50 Ω to Vcc
(DC-Coupled, 1.2V,1.8V,2.5V)

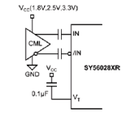

Figure 4c. CML Interface
(AC-Coupled)
*See note in Functional Description
for 1.2V CML driver with AC-Coupling

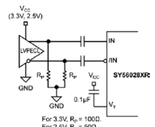

Figure 4d. LVPECL Interface
(AC-Coupled)

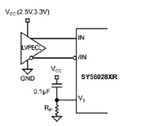

Figure 4e. LVPECL Interface
(DC-Coupled 2.5V and 3.3V)

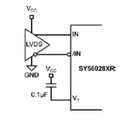

Figure 4f. LVDS Interface

	NAME	DATE	SIGN
CHECKED	E.ROCCO		
CHECKED	U.SCHAEFER		
CHECKED	S.RAVE		
DRAWN	BAUSS		

BLOCK TITLE
MUX_CML_4X2_DC

DRAWING TITLE
CLOCK

UNIVERSITY OF MAINZ

SIZE	REV.	DRAWING NO.
C		
SCALE		SHEET OF

REVISIONS				
ZONE	LTR	DESCRIPTION	DATE	APPR.

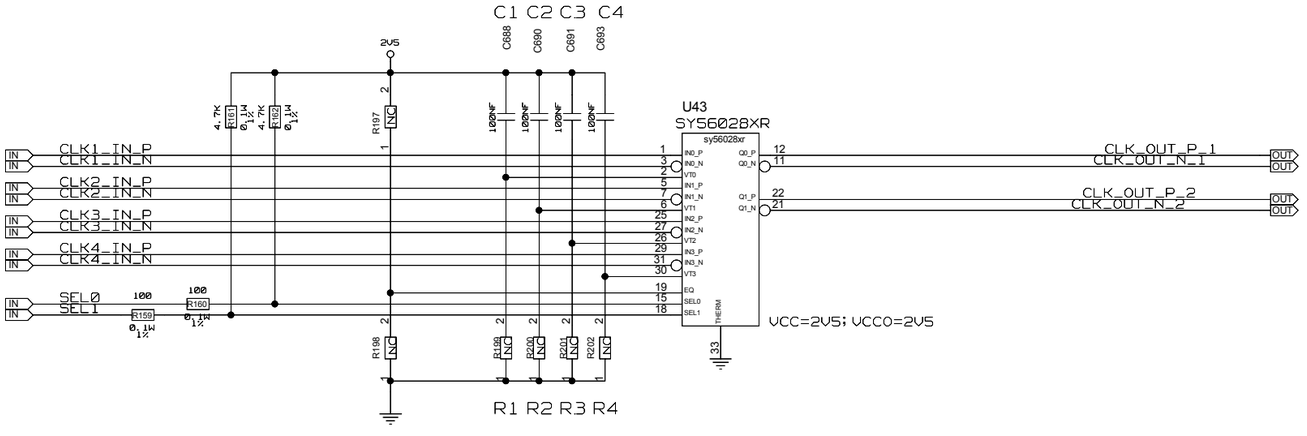

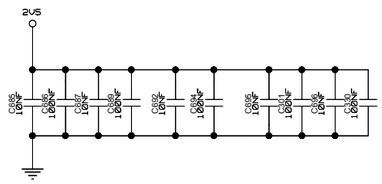

Input Interface Applications

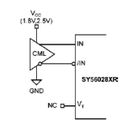

Figure 4a. CML Interface
100 Ω Differential
(DC-Coupled, 1.8V, 2.5V)

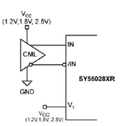

Figure 4b. CML Interface
50 Ω to Vcc
(DC-Coupled, 1.2V,1.8V,2.5V)

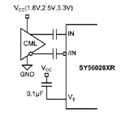

Figure 4c. CML Interface
(AC-Coupled)
*See note in Functional Description
for 1.2V CML driver with AC-Coupling

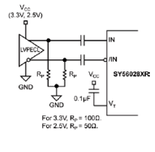

Figure 4d. LVPECL Interface
(AC-Coupled)

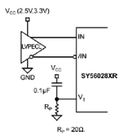

Figure 4e. LVPECL Interface
(DC-Coupled 2.5V and 3.3V)

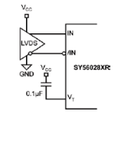

Figure 4f. LVDS Interface

	NAME	DATE	SIGN
CHECKED	E.ROCCO		
CHECKED	U.SCHAEFER		
CHECKED	S.RAVE		
DRAWN	BAUSS		

BLOCK TITLE
MUX_CML_4X2_DC

DRAWING TITLE
CLOCK

UNIVERSITY OF MAINZ

SIZE	REV.	DRAWING NO.
C		
SCALE		SHEET OF

REVISIONS				
ZONE	LTR	DESCRIPTION	DATE	APPR.

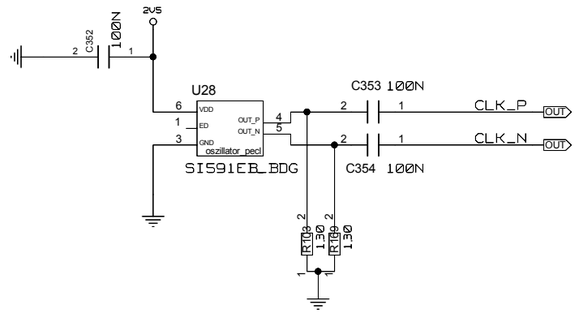

	NAME	DATE	SIGN
CHECKED	E.ROCCO		
CHECKED	U.SCHAEFER		
CHECKED	S.RAVE		
DRAWN	BAUSS		

BLOCK TITLE
CLOCK_LVPECL_AC

DRAWING TITLE
CLOCK

UNIVERSITY OF MAINZ

SIZE C | REV. | DRAWING NO.

SCALE | SHEET OF

REVISIONS				
ZONE	LTR	DESCRIPTION	DATE	APPR.

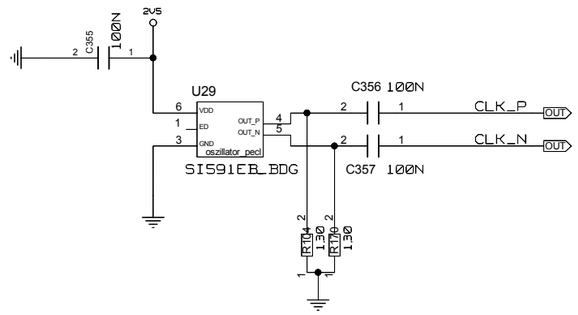

	NAME	DATE	SIGN
CHECKED	E.ROCCO		
CHECKED	U.SCHAEFER		
CHECKED	S.RAVE		
DRAWN	BAUSS		

BLOCK TITLE
CLOCK_LVPECL_AC

DRAWING TITLE
CLOCK

UNIVERSITY OF MAINZ

SIZE C | REV. | DRAWING NO.

SCALE | SHEET OF

REVISIONS				
ZONE	LTR	DESCRIPTION	DATE	APPR.

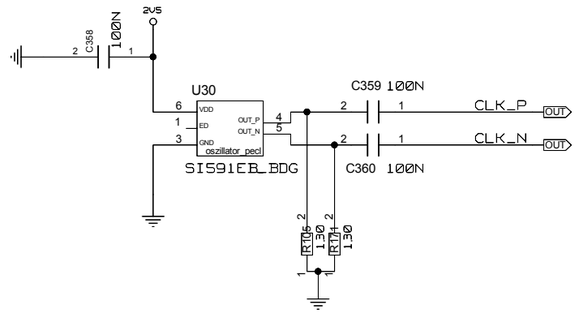

	NAME	DATE	SIGN
CHECKED	E.ROCCO		
CHECKED	U.SCHAEFER		
CHECKED	S.RAVE		
DRAWN	BAUSS		

BLOCK TITLE
CLOCK_LVPECL_AC

DRAWING TITLE
CLOCK

UNIVERSITY OF MAINZ

SIZE C | REV. | DRAWING NO.

SCALE | SHEET OF

REVISIONS				
ZONE	LTR	DESCRIPTION	DATE	APPR.

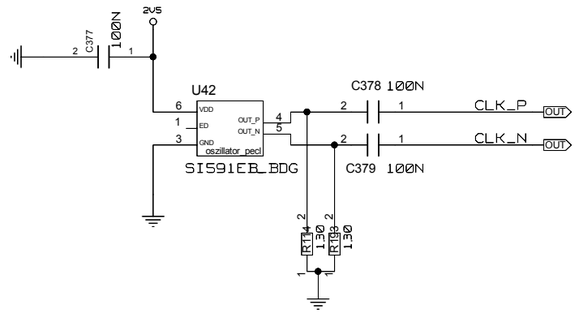

	NAME	DATE	SIGN
CHECKED	E.ROCCO		
CHECKED	U.SCHAEFER		
CHECKED	S.RAVE		
DRAWN	BAUSS		

BLOCK TITLE
CLOCK_LVPECL_AC

DRAWING TITLE
CLOCK

UNIVERSITY OF MAINZ

SIZE C | REV. | DRAWING NO.

SCALE | SHEET OF

REVISIONS				
ZONE	LTR	DESCRIPTION	DATE	APPR.

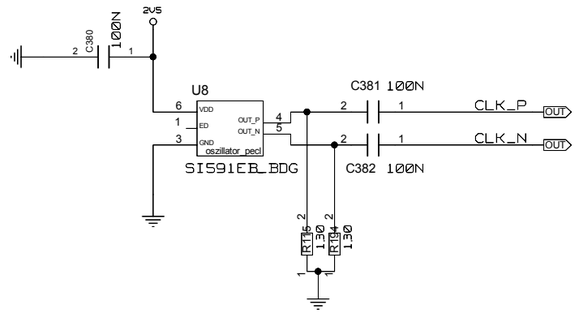

	NAME	DATE	SIGN
CHECKED	E.ROCCO		
CHECKED	U.SCHAEFER		
CHECKED	S.RAVE		
DRAWN	BAUSS		

BLOCK TITLE
CLOCK_LVPECL_AC

DRAWING TITLE
CLOCK

UNIVERSITY OF MAINZ

SIZE C | REV. | DRAWING NO.

SCALE | SHEET OF

REVISIONS				
ZONE	LTR	DESCRIPTION	DATE	APPR.

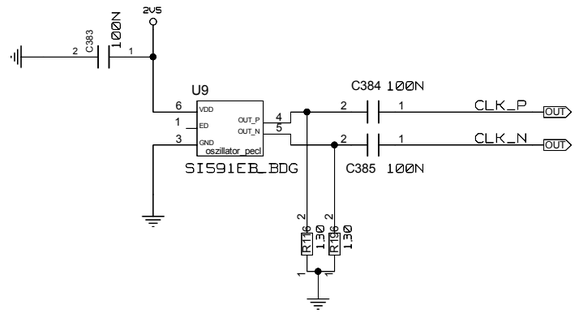

	NAME	DATE	SIGN
CHECKED	E.ROCCO		
CHECKED	U.SCHAEFER		
CHECKED	S.RAVE		
DRAWN	BAUSS		

BLOCK TITLE
CLOCK_LVPECL_AC

DRAWING TITLE
CLOCK

UNIVERSITY OF MAINZ

SIZE C | REV. | DRAWING NO.

SCALE | SHEET OF

REVISIONS				
ZONE	LTR	DESCRIPTION	DATE	APPR.

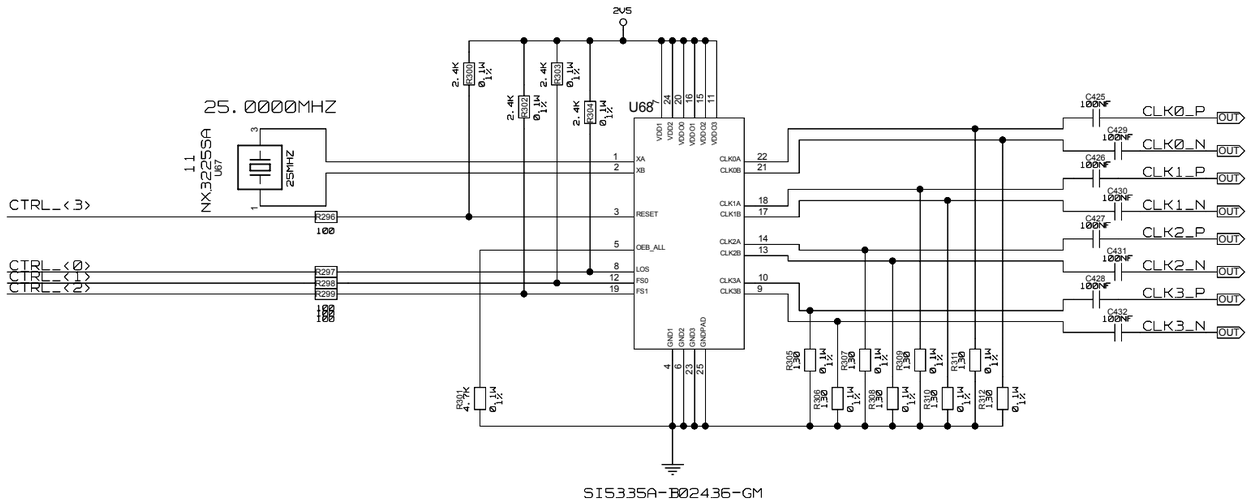

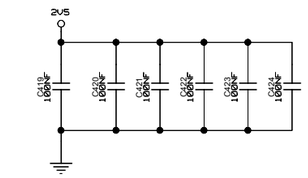

TO CTRL_<3..0>

	NAME	DATE	SIGN
CHECKED	E.ROCCO		
CHECKED	U.SCHAEFER		
CHECKED	S.RAVE		
DRAWN	BAUSS		

BLOCK TITLE: QUAD_CLOCK_GEN

DRAWING TITLE: CLOCK

UNIVERSITY OF MAINZ

SIZE: C | REV. | DRAWING NO.

SCALE | SHEET OF

REVISIONS				
ZONE	LTR	DESCRIPTION	DATE	APPR.

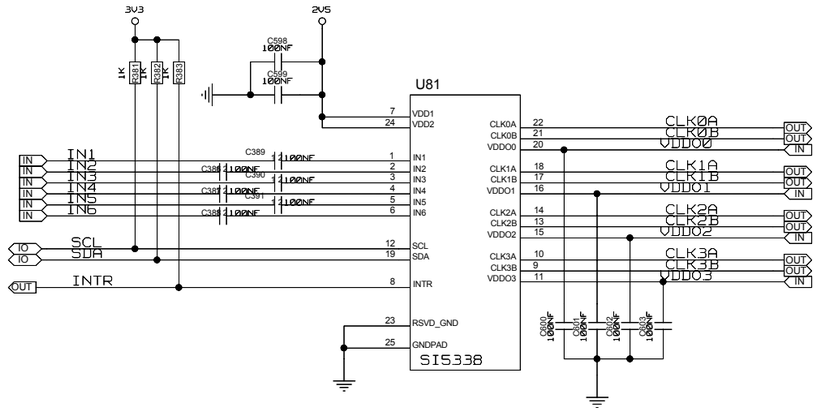

	NAME	DATE	SIGN
CHECKED	E.ROCCO		
CHECKED	U.SCHAEFER		
CHECKED	S.RAVE		
DRAWN	BAUSS	02.12.2015	

BLOCK TITLE: JITTERCLEANER_SI5338

DRAWING TITLE: CLOCK

UNIVERSITY OF MAINZ

SIZE: C | REV. | DRAWING NO.

SCALE | SHEET OF

REVISIONS				
ZONE	LTR	DESCRIPTION	DATE	APPR.

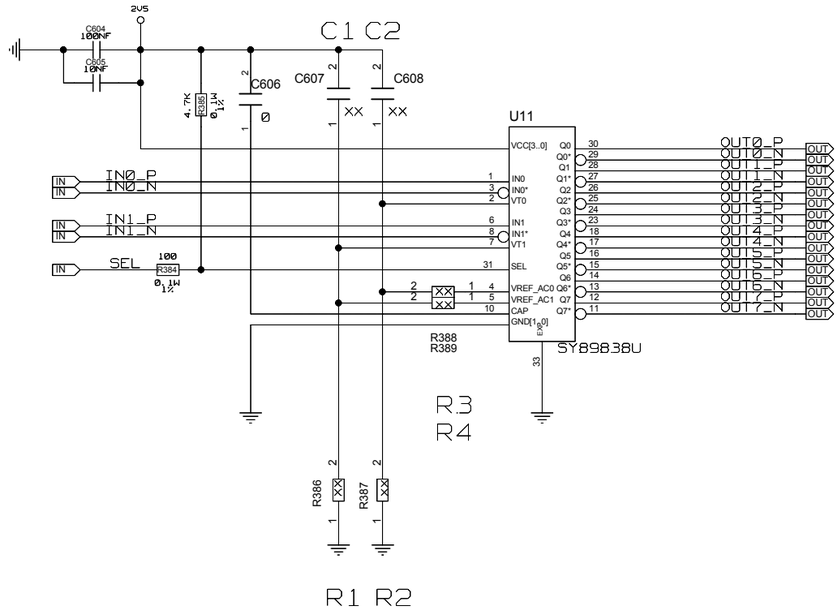

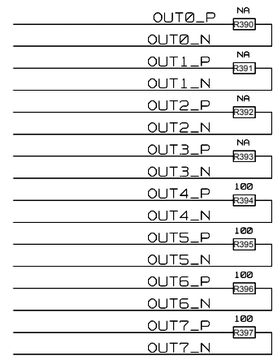

	NAME	DATE	SIGN
CHECKED	E.ROCCO		
CHECKED	U.SCHAEFER		
CHECKED	S.RAVE		
DRAWN	BAUSS		

BLOCK TITLE
CLOCK_LVDS_FANOUT8

DRAWING TITLE
CLOCK

UNIVERSITY OF MAINZ

SIZE C | REV. | DRAWING NO.

SCALE | SHEET OF

IPMC CONNECTOR MOLEX_87782-3003

REVISIONS				
ZONE	LTR	DESCRIPTION	DATE	APPR.

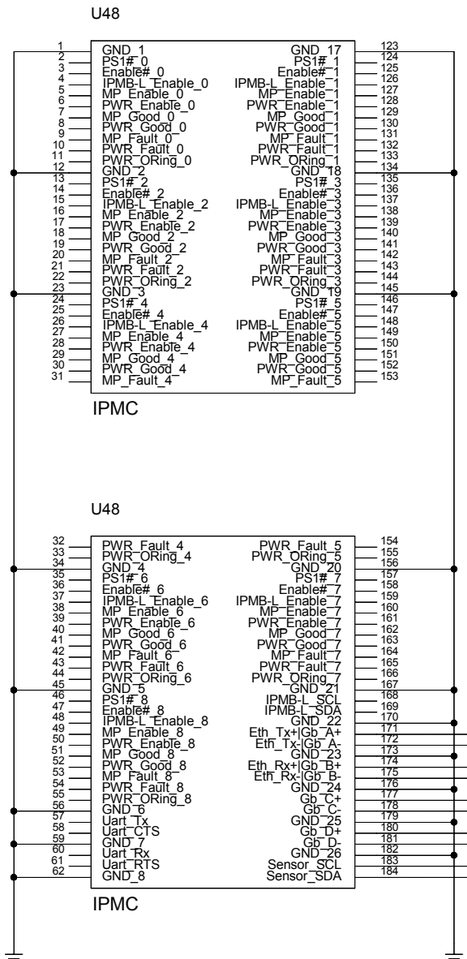

GB_A_P
GB_A_N
GB_B_P
GB_B_N
GB_C_P
GB_C_N
GB_D_P
GB_D_N
IPMC_SENS_SCL
IPMC_SENS_SDA

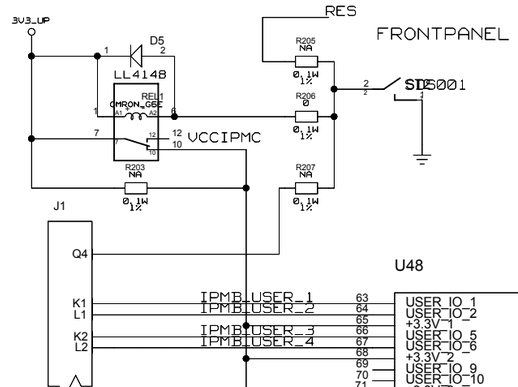

IPMB_USER_1
IPMB_USER_2
IPMB_USER_3
IPMB_USER_4

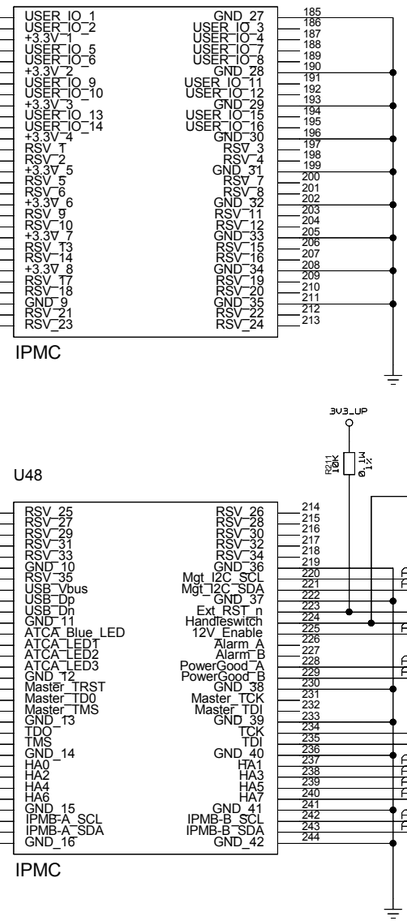

LED_BLUE
LED_RED
LED_GREEN
LED_AMBER
TDO
TMS
ATCA_CTRL<0>
ATCA_CTRL<2>
ATCA_CTRL<4>
ATCA_CTRL<6>
ATCA_CTRL<8>
ATCA_CTRL<9>

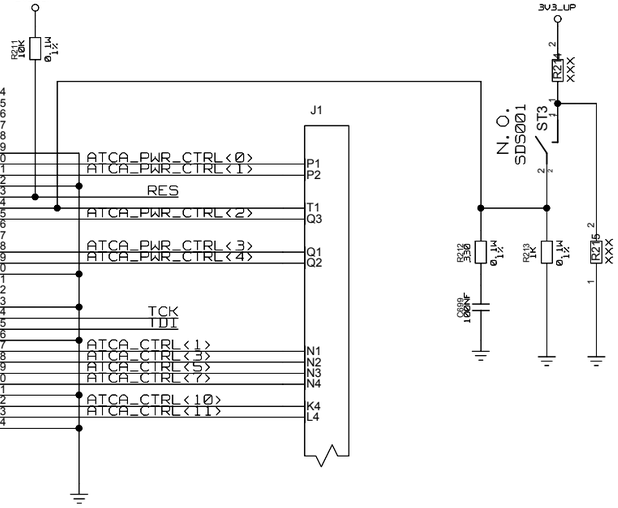

ATCA_HA<0..7> BACKPLANE + MEZZANINE
ATCA_A/B_SCL/SDA BACKPLANE + MEZZANINE

ATCA_CTRL<11..0>
ATCA_PWR_CTRL<4..0>

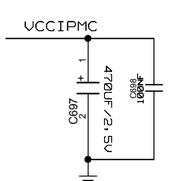

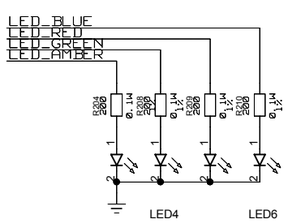

CHANGED 17.12.2015

FRONTPANEL

	NAME	DATE	SIGN
CHECKED	E.ROCCO		
CHECKED	U.SCHAEFER		
CHECKED	S.RAVE		
DRAWN	BAUSS	30.10.2015	

BLOCK TITLE: IPMC

DRAWING TITLE: IPMC CONTROL

UNIVERSITY OF MAINZ

SIZE: C | REV. | DRAWING NO.

SCALE | SHEET OF

REVISIONS				
ZONE	LTR	DESCRIPTION	DATE	APPR.

IPMC JTAG PORT FRONTPANEL

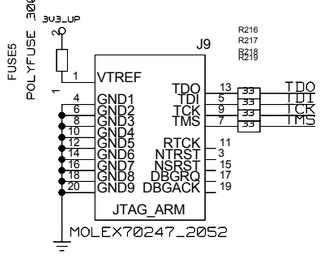

MEMORY

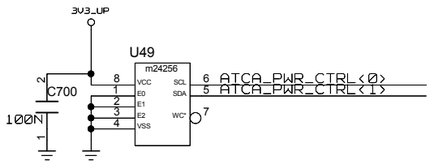

I2C FPGA TEMPERATURE

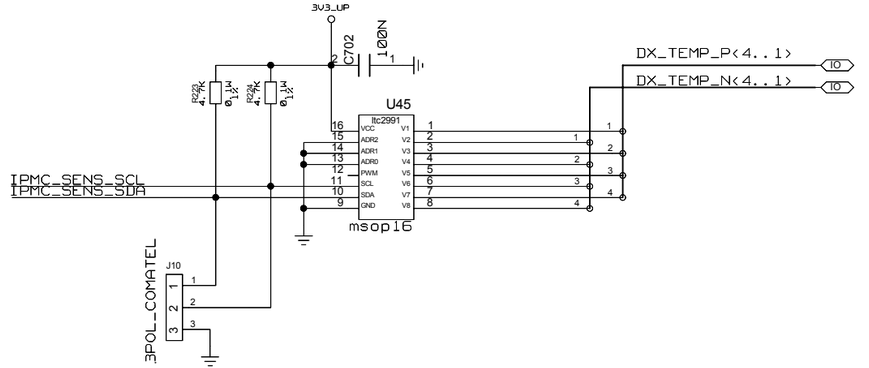

I2C BOARDTEMP

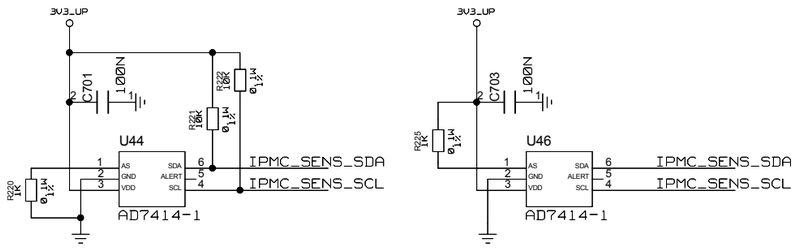

	NAME	DATE	SIGN
CHECKED	E.ROCCO		
CHECKED	U.SCHAEFER		
CHECKED	S.RAVE		
DRAWN	BAUSS	23.07.2015	

BLOCK TITLE: IPMC

DRAWING TITLE: IPMC CONTROL

UNIVERSITY OF MAINZ

SIZE: C | REV. | DRAWING NO.

SCALE | SHEET OF

REVISIONS				
ZONE	LTR	DESCRIPTION	DATE	APPR.

BACKPLANE BASE CHANNEL2

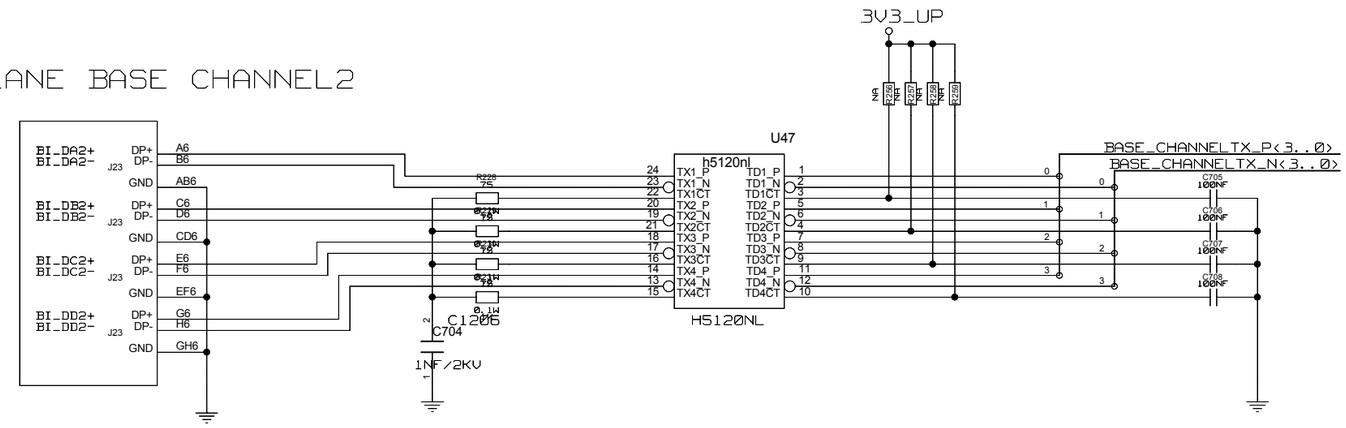

RJ45 FRONTPANEL

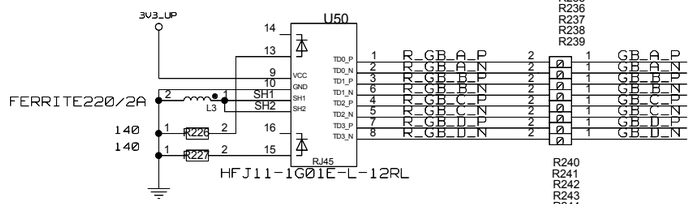

MEZZANINE

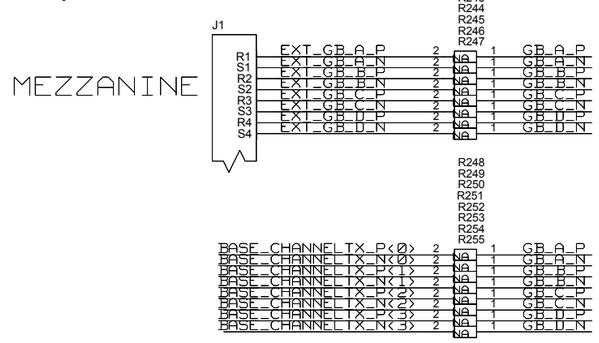

TO IPMC MODUL

	NAME	DATE	SIGN
CHECKED	E.ROCCO		
CHECKED	U.SCHAEFER		
CHECKED	S.RAVE		
DRAWN	BAUSS		

BLOCK TITLE: IPMC

DRAWING TITLE: IPMC CONTROL

UNIVERSITY OF MAINZ

SIZE: C | REV. | DRAWING NO.

SCALE | SHEET OF

REVISIONS				
ZONE	LTR	DESCRIPTION	DATE	APPR.

U51

1KHZ
CPLD_CLK1
GCK_SINGLE

CPLD_IO_U1<11..0>
CPLD_IO_U2<11..0>
CPLD_IO_U3<11..0>
CPLD_IO_U4<11..0>

J1
MEZZANINE
CPLD_EXT<0>
CPLD_EXT<1>
CPLD_EXT<2>
CPLD_EXT<3>
CPLD_EXT<4>
CPLD_EXT<5>
CPLD_EXT<6>
CPLD_EXT<7>
CPLD_EXT<8>
CPLD_EXT<9>
CPLD_EXT<10>
CPLD_EXT<11>
CPLD_EXT<12>
CPLD_EXT<13>
CPLD_EXT<14>
CPLD_EXT<15>
CPLD_EXT<16>
CPLD_EXT<17>
CPLD_EXT<18>
CPLD_EXT<19>

GCK0 GCK1 GCK2
IO_R1_1 IO_N4_1 IO_N2_1 IO_P1_1 IO_L3_1 IO_N1_1 IO_L4_1 IO_M1_1 IO_L5_1 IO_N3_1 IO_P2_1 IO_P4_1 IO_R2_1 IO_T1_1 IO_T2_1 IO_N5_1 IO_R4_1 IO_M5_1 IO_R5_1 IO_K4_1 IO_L2_1 IO_K3_1 IO_L1_1 IO_K5_1 IO_K2_1 IO_J4_1 IO_K1_1 IO_J3_1 IO_J2_1 IO_J5_1 IO_J1_1 IO_R6_1 IO_N6_1 IO_R3_1 IO_M6_1 IO_T3_1 IO_P6_1 IO_T4_1 IO_P7_1 IO_T5_1 IO_N7_1 IO_R7_1 IO_M7_1 IO_R15_1 IO_T16_1 IO_N14_1 IO_R16_1 IO_N15_1 IO_M15_1 IO_M13_1 IO_P16_1 IO_N16_1 IO_L14_1 IO_M14_1 IO_P15_1 IO_P14_1 IO_P13_1 IO_R13_1 IO_N13_1 IO_R14_1 IO_T15_1 IO_R12_1 IO_N11_1 IO_M11_1 IO_N10_1 IO_L15_1 IO_L13_1 IO_M12_1 IO_M16_1 IO_K14_1 IO_L16_1 IO_K15_1 IO_L12_1 IO_K16_1 IO_J14_1 IO_J15_1 IO_J13_1 IO_P10_1 IO_R10_1 IO_T10_1 IO_R9_1 IO_N9_1 IO_M8_1 IO_T8_1 IO_P8_1 IO_R8_1 IO_T7_1 IO_N8_1 IO_T6_1

IO_B3_2 IO_B4_2 IO_C4_2 IO_A2_2 IO_A3_2 IO_A4_2 IO_B5_2 IO_A5_2 IO_E8_2 IO_B6_2 IO_C7_2 IO_D3_2 IO_C3_2 IO_E3_2 IO_B2_2 IO_D4_2 IO_D2_2 IO_E5_2 IO_B1_2 IO_E4_2 IO_C1_2 IO_E2_2 IO_A6_2 IO_D7_2 IO_B7_2 IO_E9_2 IO_A7_2 IO_D8_2 IO_B8_2 IO_C8_2 IO_A8_2 IO_E11_2 IO_E10_2 IO_F2_2 IO_F3_2 IO_G4_2 IO_G3_2 IO_F5_2 IO_G5_2 IO_H2_2 IO_H4_2 IO_H3_2 IO_H1_2 IO_H5_2 IO_B13_2 IO_B14_2 IO_C13_2 IO_A15_2 IO_C12_2 IO_B12_2 IO_D13_2 IO_A14_2 IO_E13_2 IO_A13_2 IO_C11_2 IO_A12_2 IO_A16_2 IO_B15_2 IO_C14_2 IO_G11_2 IO_B16_2 IO_D15_2 IO_E14_2 IO_C16_2 IO_E14_2 IO_E13_2 IO_E15_2 IO_G13_2 IO_B11_2 IO_D11_2 IO_A11_2 IO_D10_2 IO_B10_2 IO_E12_2 IO_F12_2 IO_B9_2 IO_C9_2 IO_C10_2 IO_A9_2 IO_D9_2 IO_F15_2 IO_G14_2 IO_E16_2 IO_H12_2 IO_F16_2 IO_H16_2 IO_G15_2 IO_H13_2 IO_G16_2 IO_H14_2 IO_H15_2 IO_J12_2

AVAGO_CTRL<47..0>
CLK_CTRL<14..0>

ST5
LED MEZZA.

XC2C256
XC2C256_FG256
xc2c256_FT256

J11
JTAG_USB
3V3
FUSE2
POLYFUSE 300MA
VREF TDI TDO TMS TCK CONNECTOR
R11 A10 N12 P12

1V8_CPLD 3V3
F4
VCCAUX VCC[3..0] VCCIO1[7..0] VCCIO2[6..0] GND[19..0]

IN CPLD_CLK1

CPLD CLOCK

1V8_CPLD
U55
C721 100NF
C728 100NF
GCK_P
GCK_N
IN
IN
GCK_SINGLE
SN65LVDS4

3V3
VCC=3V3
C260
NC
U54
SN74AHC1G14
C710 100NF
R261 51
R259 162
1KHZ
C722
XX

1V8_CPLD
C711 C712 C713 C714 C715 C716 C717 C718 C720 C723 C724
3V3
C725 C726 C727 C729 C730 C731 C732 C733 C734
10N U37

3V3
D6
RS3J_13_F
C709 100NF
U53
mic68400
1V8_CPLD
1.8
C710 10UF

	NAME	DATE	SIGN
CHECKED	E.ROCCO		
CHECKED	U.SCHAEFER		
CHECKED	S.RAVE		
DRAWN	BAUSS	22.07.2015	

BLOCK TITLE: CPLD

DRAWING TITLE: JFEX

UNIVERSITY OF MAINZ

SIZE: C | REV. | DRAWING NO.

SCALE | SHEET 1 OF 1

REVISIONS				
ZONE	LTR	DESCRIPTION	DATE	APPR.

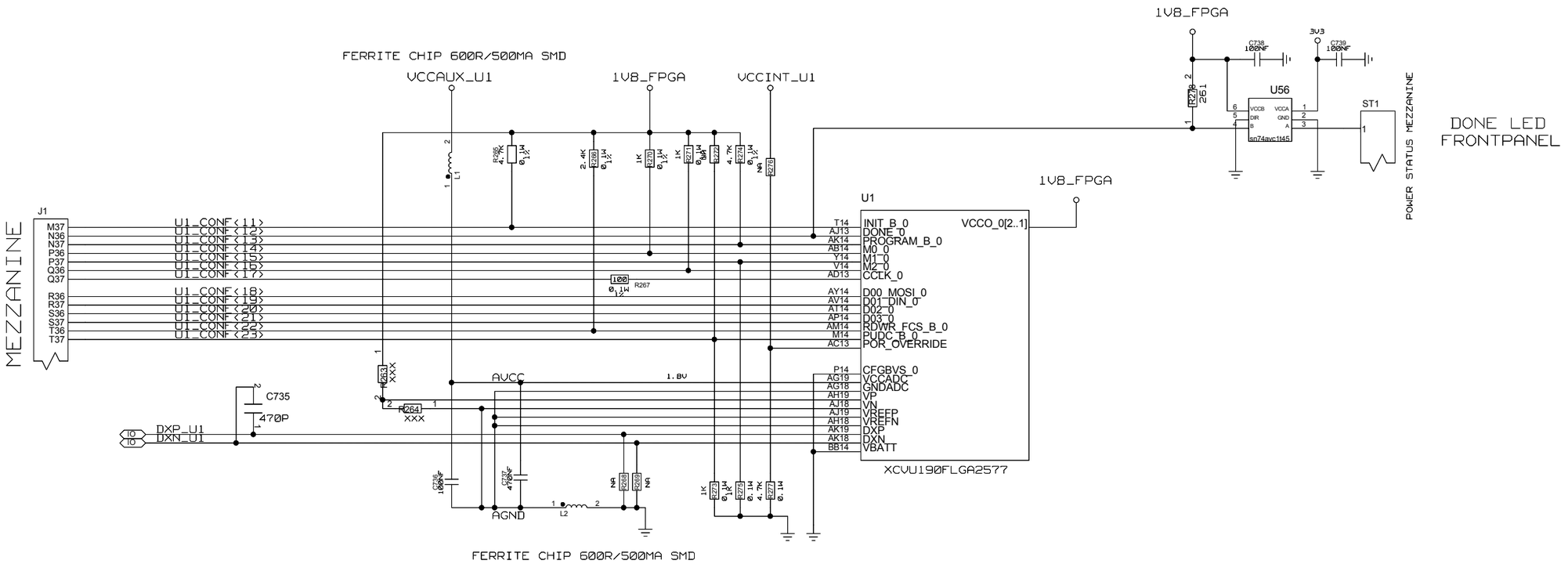

	NAME	DATE	SIGN
CHECKED	E.ROCCO		
CHECKED	U.SCHAEFER		
CHECKED	S.RAVE		
DRAWN	BAUSS	17.09.2015	

BLOCK TITLE: CONFIGURATION PROCESSOR U1

DRAWING TITLE: JFEX

UNIVERSITY OF MAINZ

SIZE: C | REV. | DRAWING NO.

SCALE | SHEET 1 OF 1

REVISIONS				
ZONE	LTR	DESCRIPTION	DATE	APPR.

BACKPLANE BASE CHANNEL1

MEZZANINE

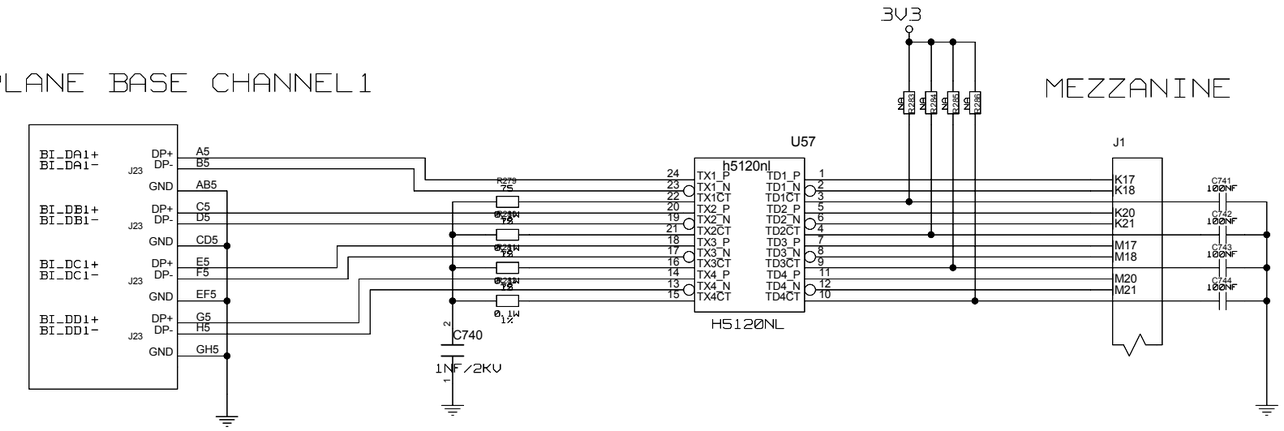

	NAME	DATE	SIGN
CHECKED	E.ROCCO		
CHECKED	U.SCHAEFER		
CHECKED	S.RAVE		
DRAWN	BAUSS	05.11.2015	

BLOCK TITLE: IPBUS

DRAWING TITLE: IPBUS

UNIVERSITY OF MAINZ

SIZE: C | REV. | DRAWING NO.

SCALE | SHEET OF

REVISIONS				
ZONE	LTR	DESCRIPTION	DATE	APPR.

CLOSE TOGETHER
NEAR FRONTPANEL

LEVELTRANSLATOR

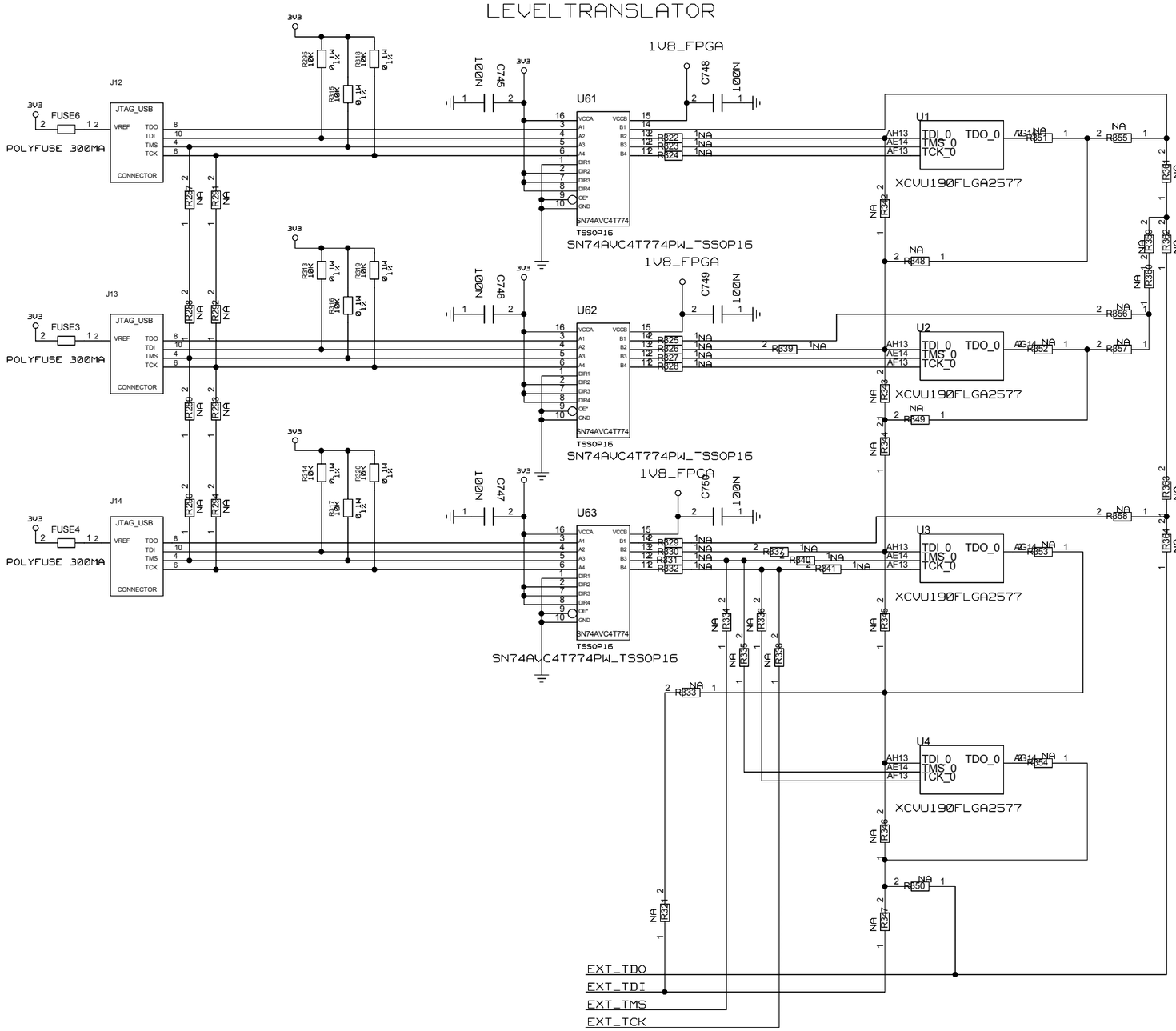

	NAME	DATE	SIGN
CHECKED	E.ROCCO		
CHECKED	U.SCHAEFER		
CHECKED	S.RAVE		
DRAWN	BAUSS	15.07.2015	

BLOCK TITLE
JTAG

DRAWING TITLE
JTAG CHAIN

UNIVERSITY OF MAINZ

SIZE	REV.	DRAWING NO.
C		
SCALE		SHEET OF

REVISIONS				
ZONE	LTR	DESCRIPTION	DATE	APPR.

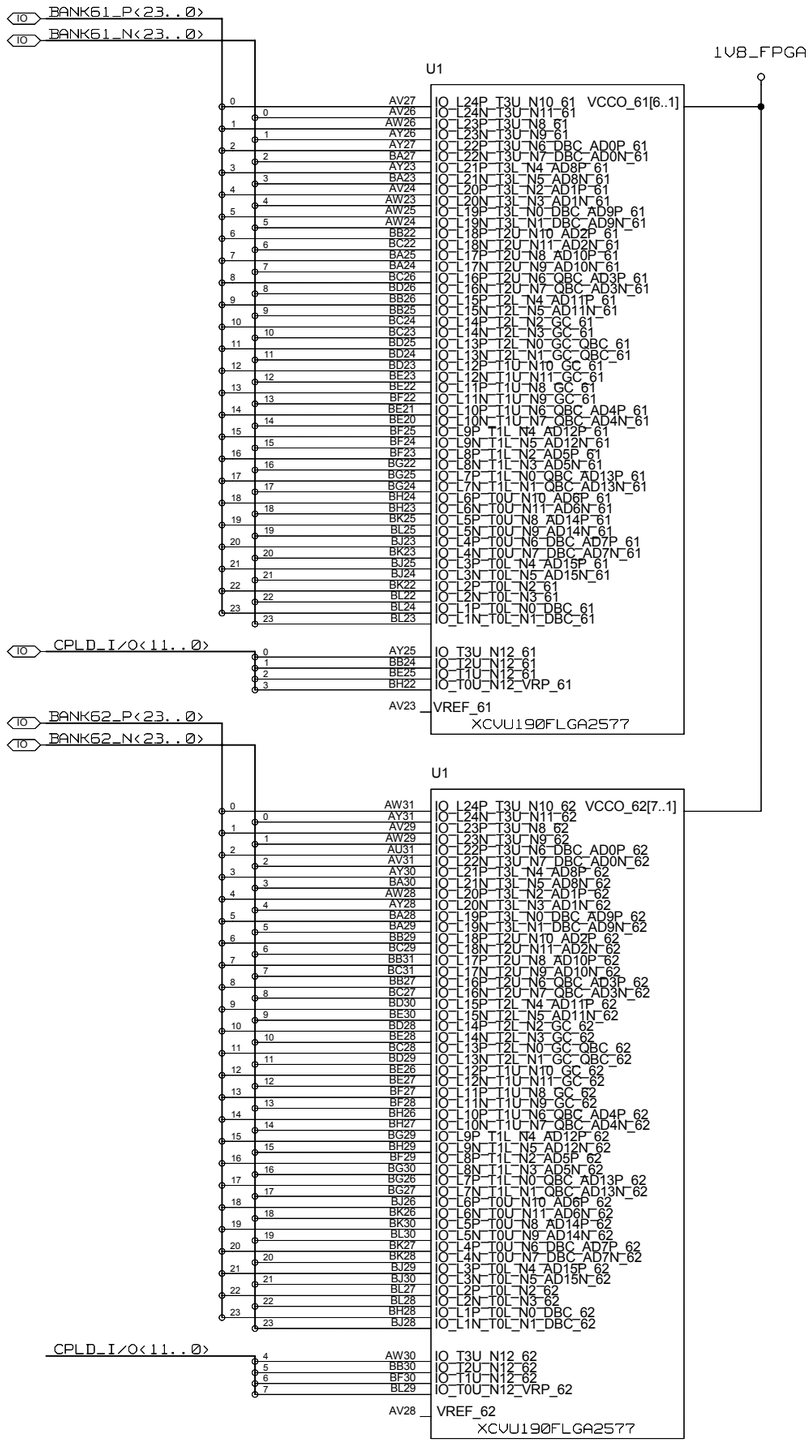

BANK
61
62
63

	NAME	DATE	SIGN
CHECKED	E.ROCCO		
CHECKED	U.SCHAEFER		
CHECKED	S.RAVE		
DRAWN	BAUSS	25. 08. 2015	

BLOCK TITLE: U1_PARALLEL_I/O

DRAWING TITLE: JFEX

UNIVERSITY OF MAINZ

SIZE: C | REV. | DRAWING NO.

SCALE | SHEET 1 OF 5

REVISIONS				
ZONE	LTR	DESCRIPTION	DATE	APPR.

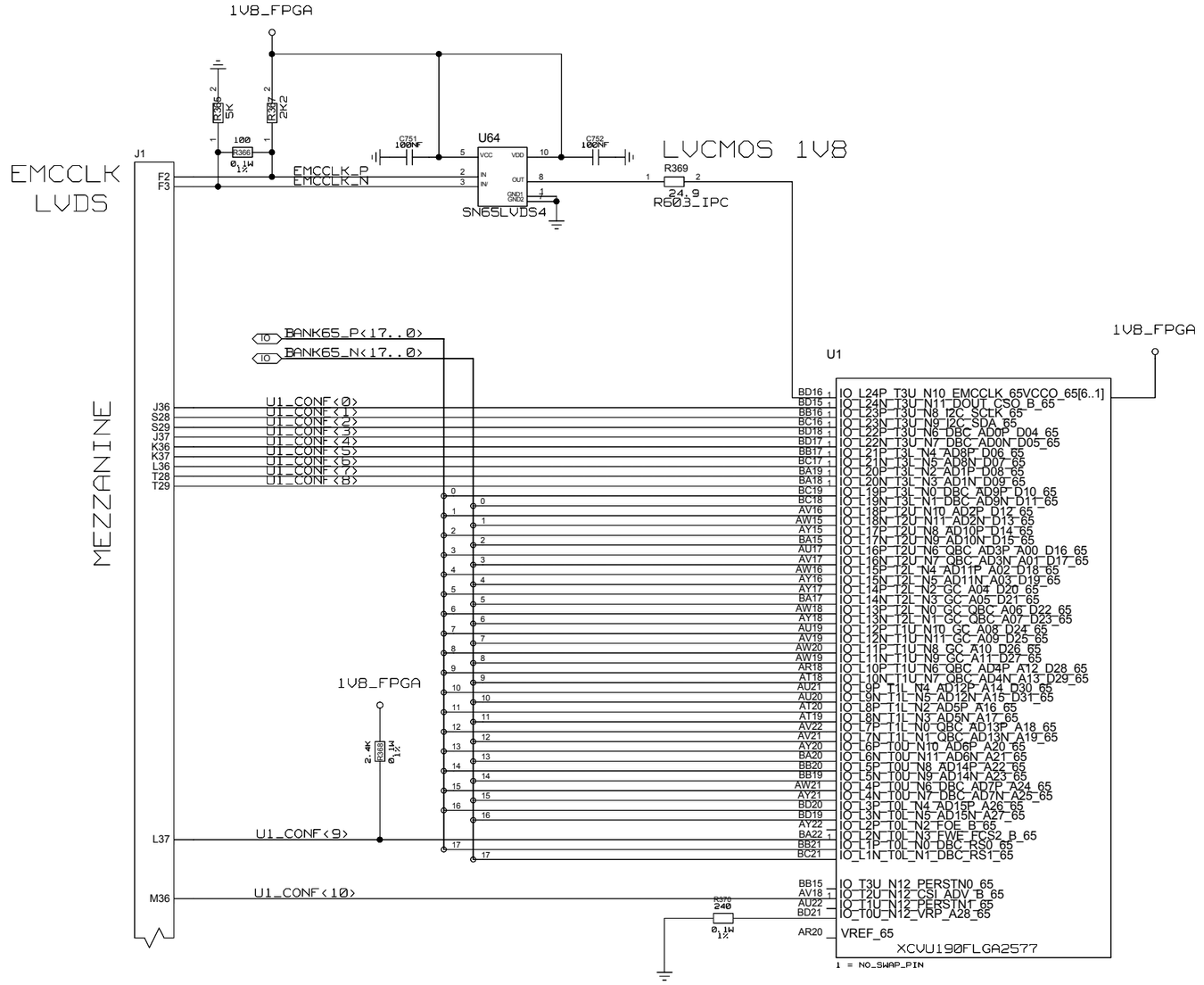

BANK
65

	NAME	DATE	SIGN
CHECKED	E.ROCCO		
CHECKED	U.SCHAEFER		
CHECKED	S.RAVE		
DRAWN	BAUSS	25.08.2015	

BLOCK TITLE
U1_PARALLEL_I/O

DRAWING TITLE
JFEX

UNIVERSITY OF MAINZ

SIZE C | REV. | DRAWING NO.

SCALE | SHEET 2 OF 5

REVISIONS				
ZONE	LTR	DESCRIPTION	DATE	APPR.

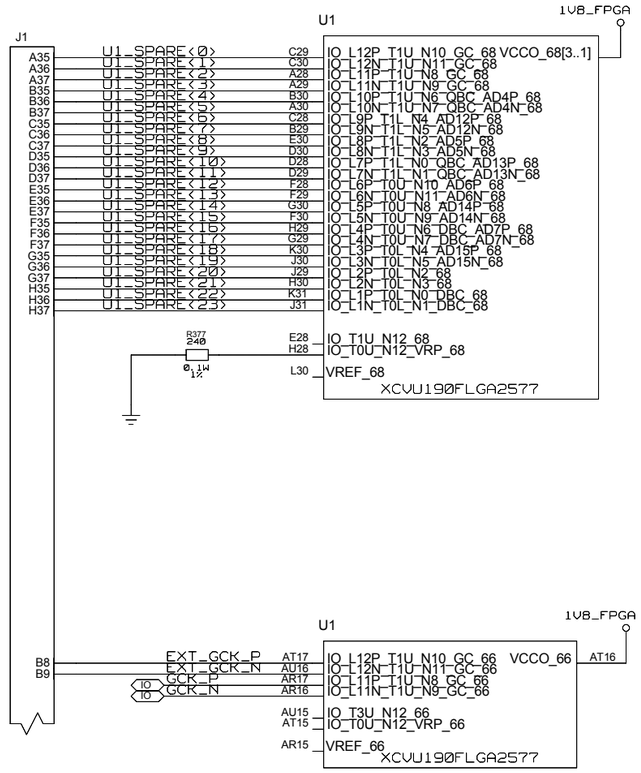

BANK
66
68

	NAME	DATE	SIGN
CHECKED	E.ROCCO		
CHECKED	U.SCHAEFER		
CHECKED	S.RAVE		
DRAWN	BAUSS	25.08.2015	

BLOCK TITLE
U1_PARALLEL_I/O

DRAWING TITLE
JFEX

UNIVERSITY OF MAINZ

SIZE C | REV. | DRAWING NO.

SCALE | SHEET 3 OF 5

REVISIONS				
ZONE	LTR	DESCRIPTION	DATE	APPR.

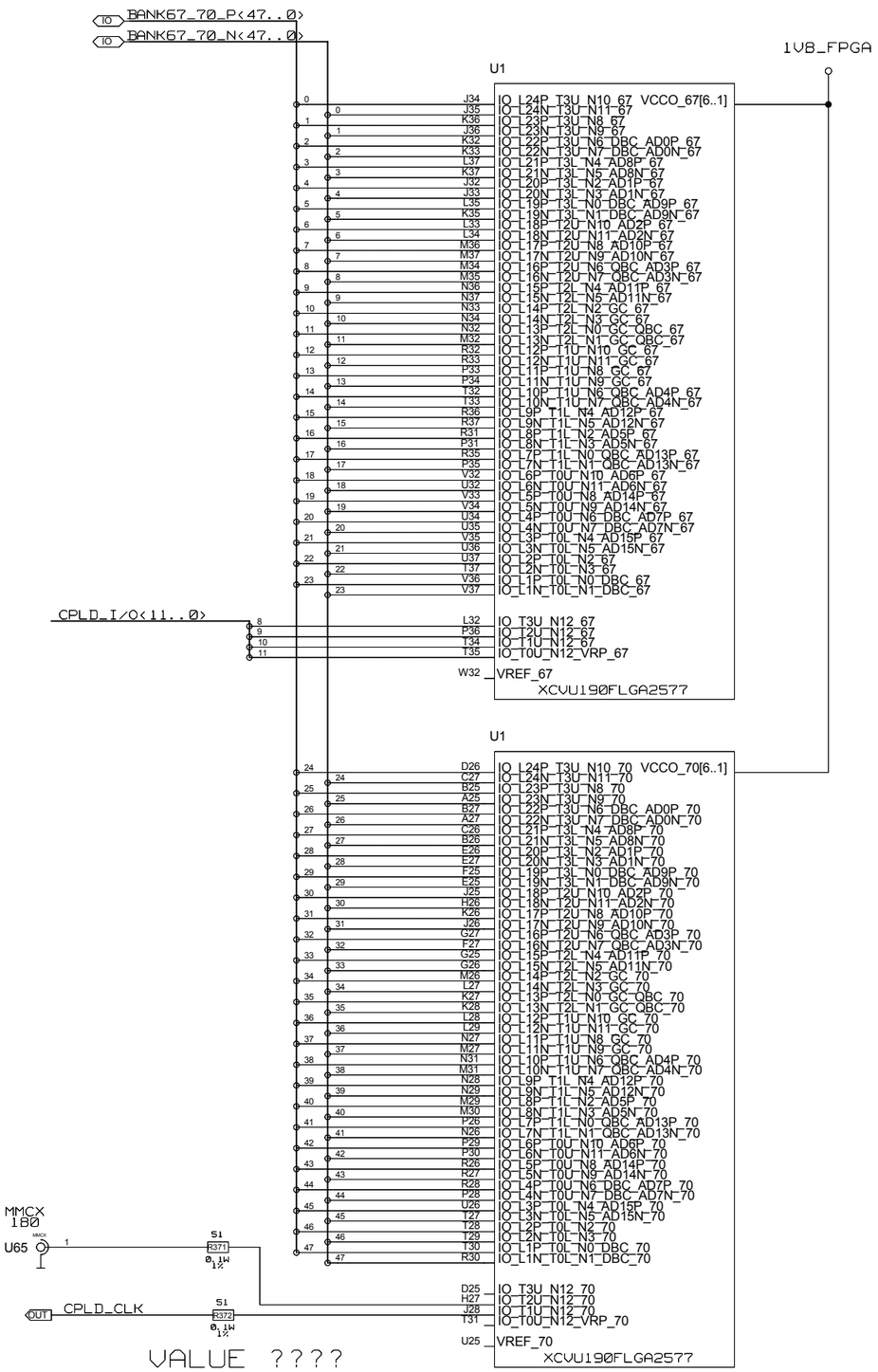

BANK
67
70

	NAME	DATE	SIGN
CHECKED	E.ROCCO		
CHECKED	U.SCHAEFER		
CHECKED	S.RAVE		
DRAWN	BAUSS	25.08.2015	

BLOCK TITLE: U1_PARALLEL_I/O

DRAWING TITLE: JFEX

UNIVERSITY OF MAINZ

SIZE: C | REV. | DRAWING NO.

SCALE | SHEET 4 OF 5

REVISIONS				
ZONE	LTR	DESCRIPTION	DATE	APPR.

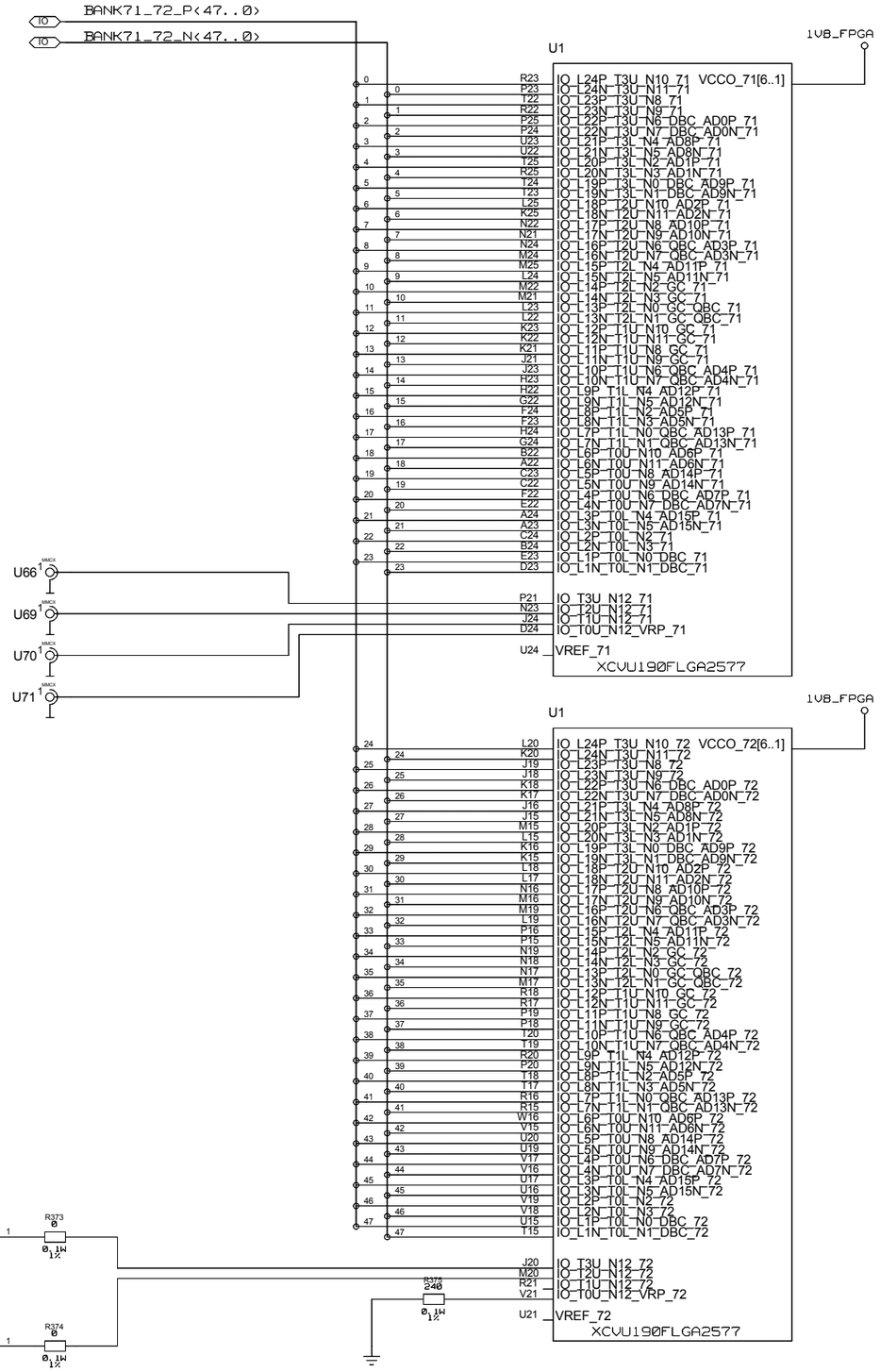

BANK
71
72

	NAME	DATE	SIGN
CHECKED	E.ROCCO		
CHECKED	U.SCHAEFER		
CHECKED	S.RAVE		
DRAWN	BAUSS	25.08.2015	

BLOCK TITLE: U1_PARALLEL_I/O

DRAWING TITLE: JFEX

UNIVERSITY OF MAINZ

SIZE: C | REV. | DRAWING NO.

SCALE | SHEET 5 OF 5

REVISIONS				
ZONE	LTR	DESCRIPTION	DATE	APPR.

AC COUPLING

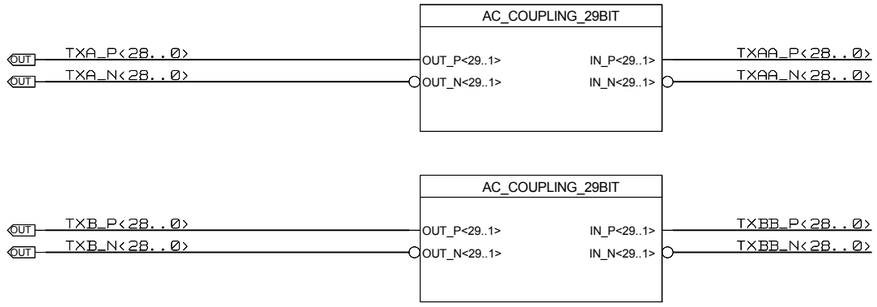

	NAME	DATE	SIGN
CHECKED	E.ROCCO		
CHECKED	U.SCHAEFER		
CHECKED	S.RAVE		
DRAWN	BAUSS	07.08.2015	

BLOCK TITLE
U1_MGT_REAL_TIME

UNIVERSITY OF MAINZ

DRAWING TITLE
I/O + AC COUPLING

SIZE C | REV. | DRAWING NO.

SCALE | SHEET 1 OF 7

REVISIONS				
ZONE	LTR	DESCRIPTION	DATE	APPR.

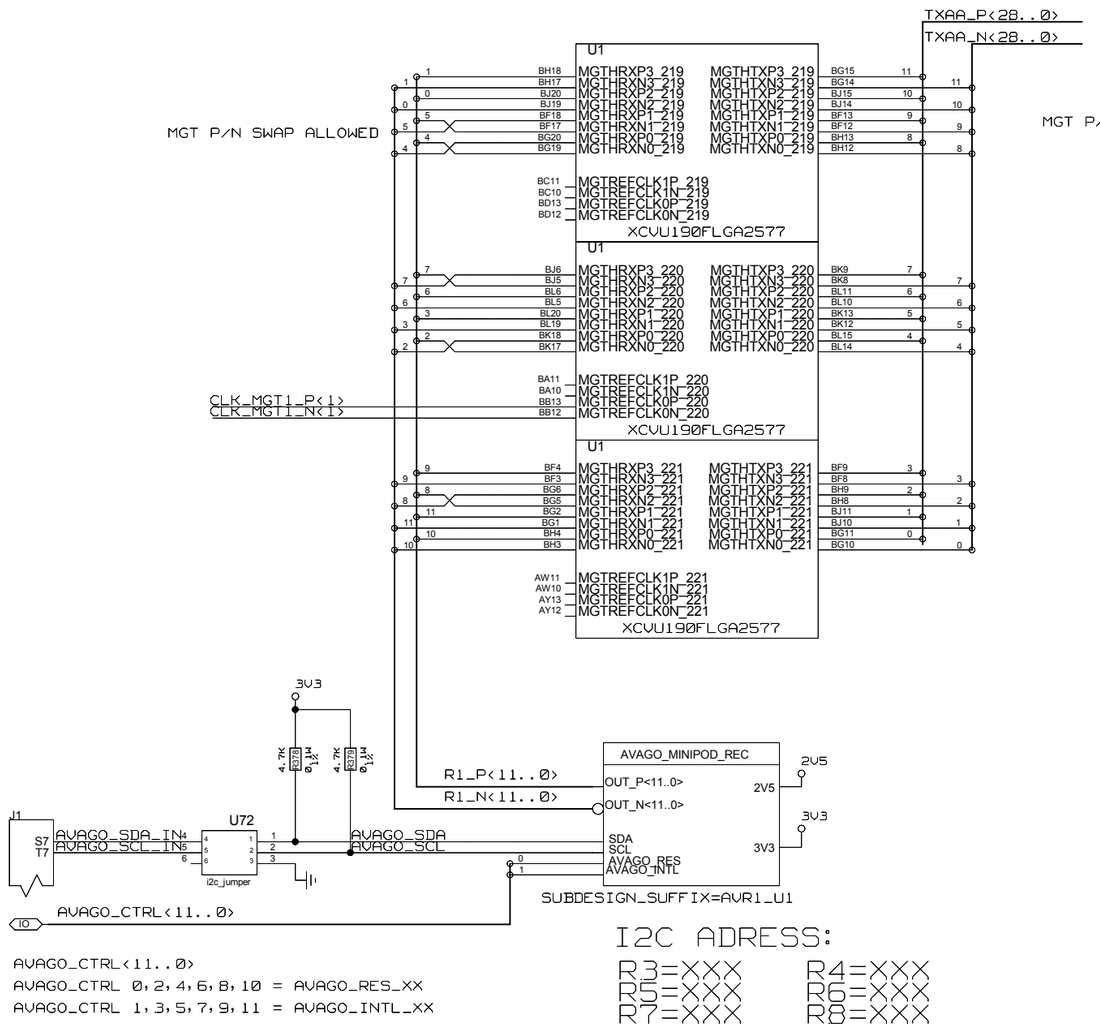

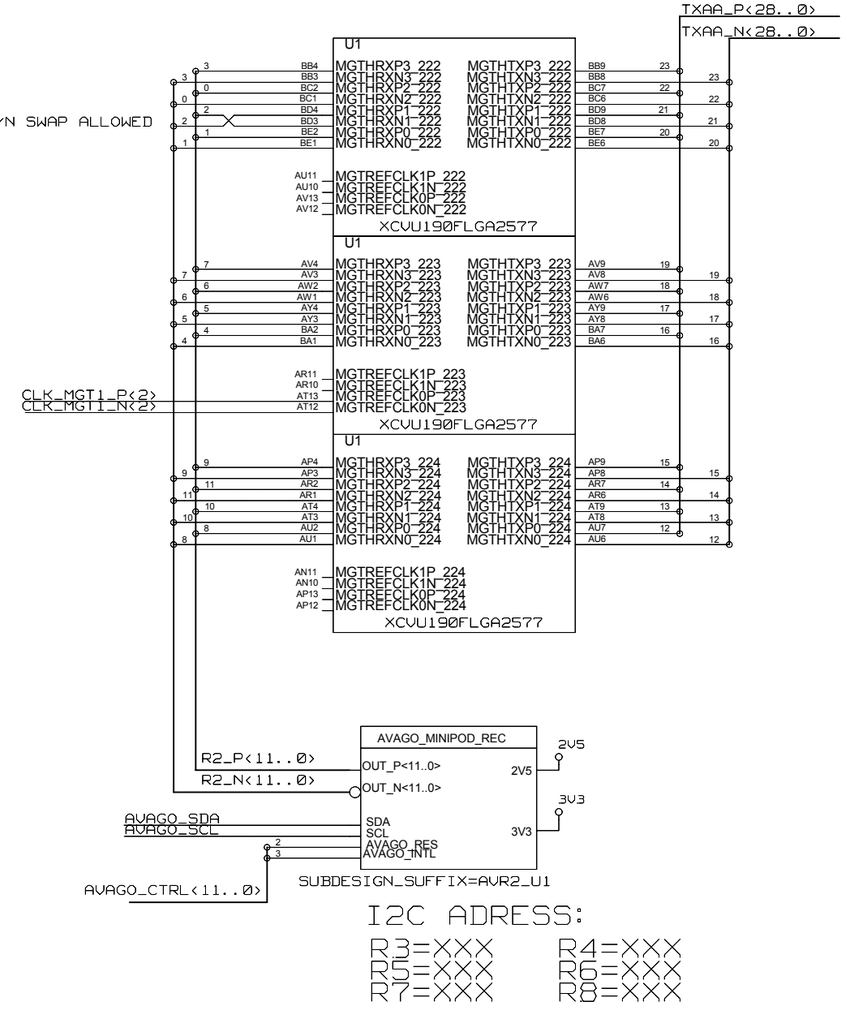

BANK
219
220
221
222
223
224

	NAME	DATE	SIGN
CHECKED	E.ROCCO		
CHECKED	U.SCHAEFER		
CHECKED	S.RAVE		
DRAWN	BAUSS	07.08.2015	

BLOCK TITLE: U1_MGT_REAL_TIME

DRAWING TITLE: AVAGO TXA

UNIVERSITY OF MAINZ

SIZE	REV.	DRAWING NO.
C		
SCALE		SHEET 2 OF 7

REVISIONS				
ZONE	LTR	DESCRIPTION	DATE	APPR.

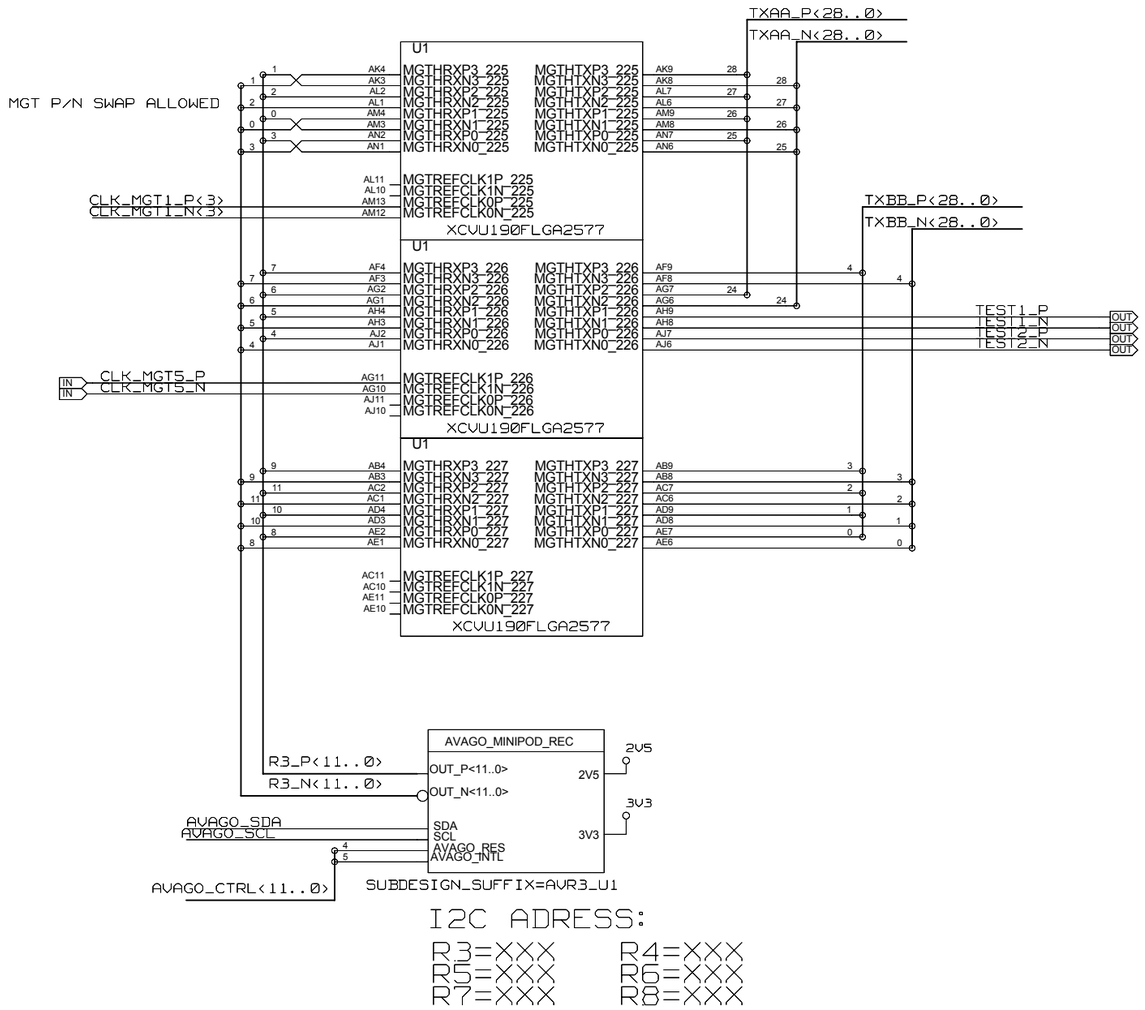

BANK
225
226
227

	NAME	DATE	SIGN
CHECKED	E.ROCCO		
CHECKED	U.SCHAEFER		
CHECKED	S.RAVE		
DRAWN	BAUSS	07.08.2015	

BLOCK TITLE: U1_MGT_REAL_TIME

DRAWING TITLE: AVAGO TXA + TXB

UNIVERSITY OF MAINZ

SIZE: C | REV. | DRAWING NO.

SCALE | SHEET 3 OF 7

REVISIONS				
ZONE	LTR	DESCRIPTION	DATE	APPR.

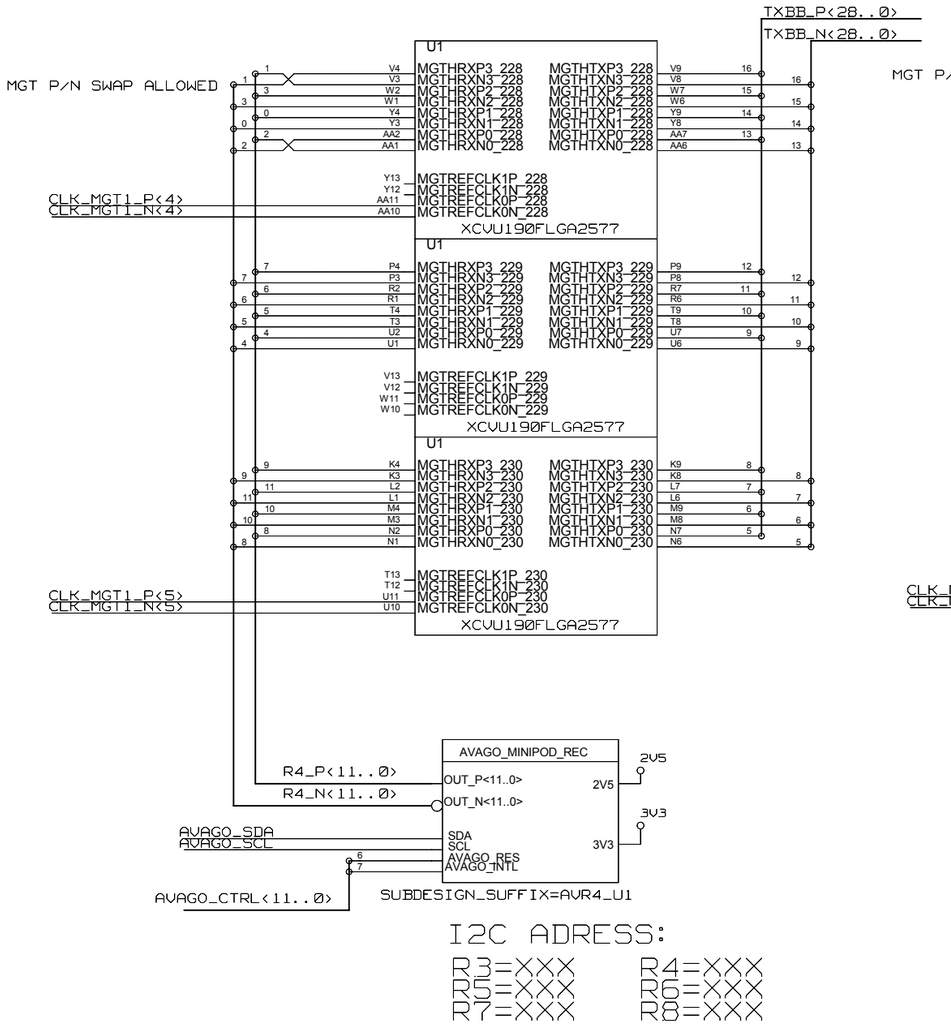

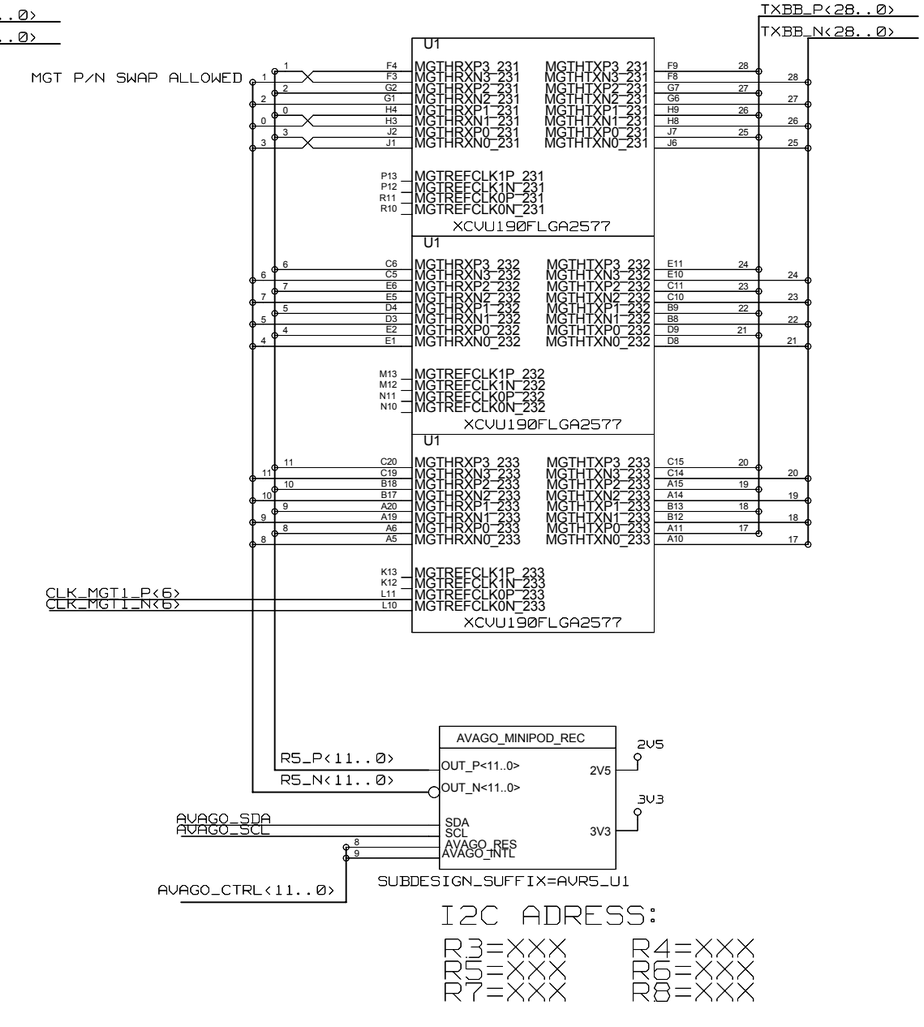

I2C ADRESS:

R3=XXX R4=XXX
R5=XXX R6=XXX
R7=XXX R8=XXX

BANK

228 229 230 231 232 233

	NAME	DATE	SIGN
CHECKED	E.ROCCO		
CHECKED	U.SCHAEFER		
CHECKED	S.RAVE		
DRAWN	BAUSS	07.08.2015	

BLOCK TITLE: U1_MGT_REAL_TIME

DRAWING TITLE: AVAGO TXB

UNIVERSITY OF MAINZ

SIZE C | REV. | DRAWING NO.

SCALE | SHEET 4 OF 7

REVISIONS				
ZONE	LTR	DESCRIPTION	DATE	APPR.

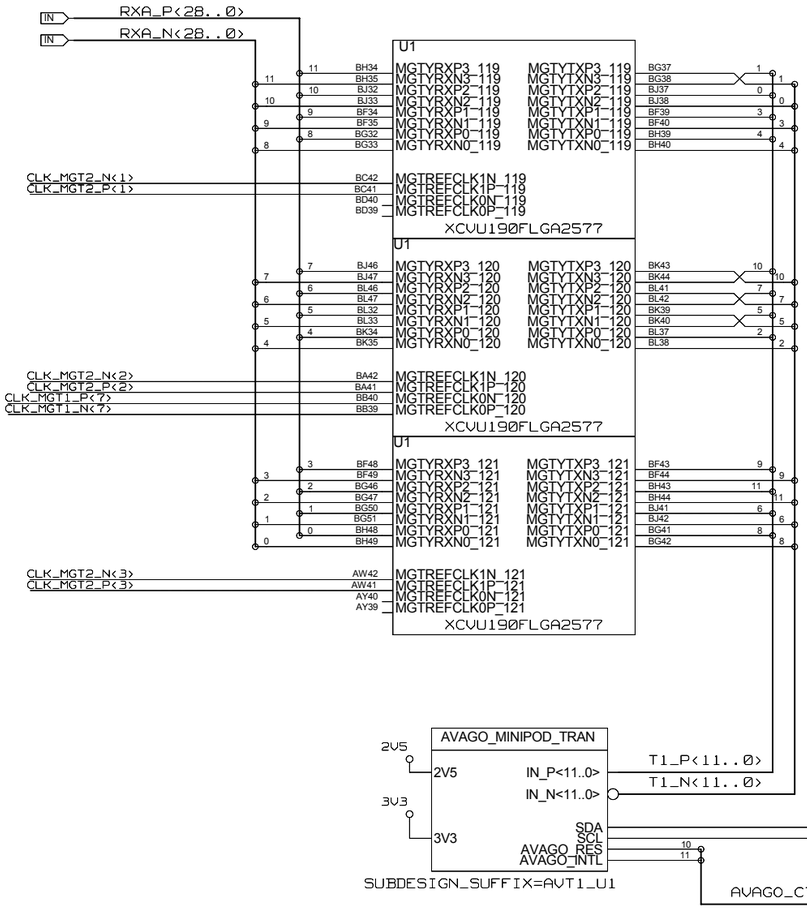

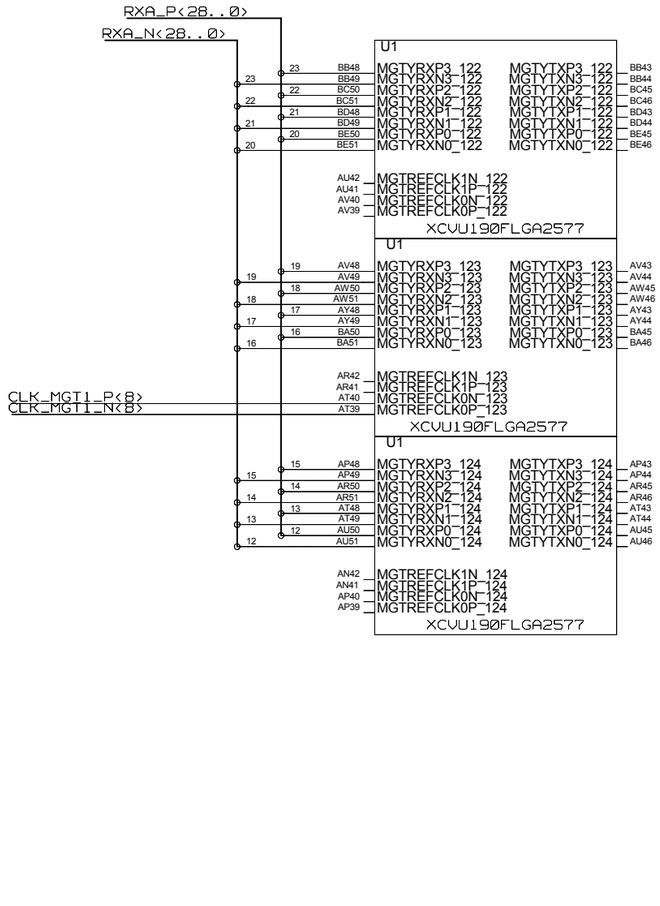

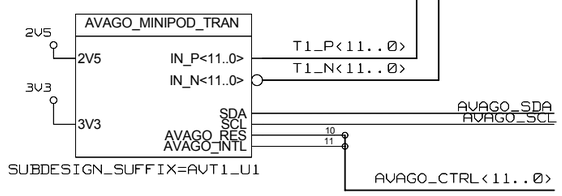

I2C ADRESS:

R3=XXX R4=XXX
R5=XXX R6=XXX
R7=XXX R8=XXX

BANK
119
120
121
122
123
124

	NAME	DATE	SIGN
CHECKED	E.ROCCO		
CHECKED	U.SCHAEFER		
CHECKED	S.RAVE		
DRAWN	BAUSS	07.08.2015	

BLOCK TITLE: U1_MGT_REAL_TIME

DRAWING TITLE: AVAGO RXA

UNIVERSITY OF MAINZ

SIZE: C | REV. | DRAWING NO.

SCALE | SHEET 5 OF 7

REVISIONS				
ZONE	LTR	DESCRIPTION	DATE	APPR.

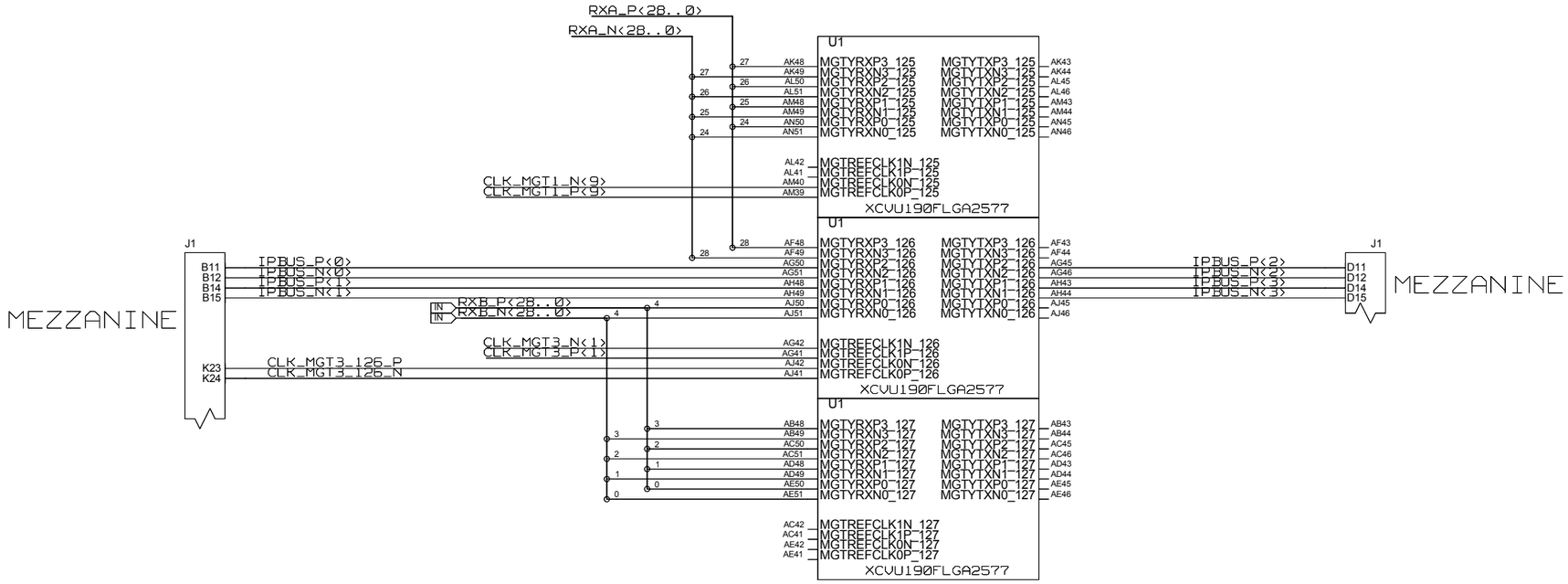

BANK
125
126
127

	NAME	DATE	SIGN
CHECKED	E.ROCCO		
CHECKED	U.SCHAEFER		
CHECKED	S.RAVE		
DRAWN	BAUSS	07.08.2015	

BLOCK TITLE: U1_MGT_REAL_TIME

DRAWING TITLE: RXA + RXB TXD + IPBUS

UNIVERSITY OF MAINZ

SIZE	REV.	DRAWING NO.
C		
SCALE		SHEET 6 OF 7

REVISIONS				
ZONE	LTR	DESCRIPTION	DATE	APPR.

PLACE CLOSE TO U2

PLACE CLOSE TO U1

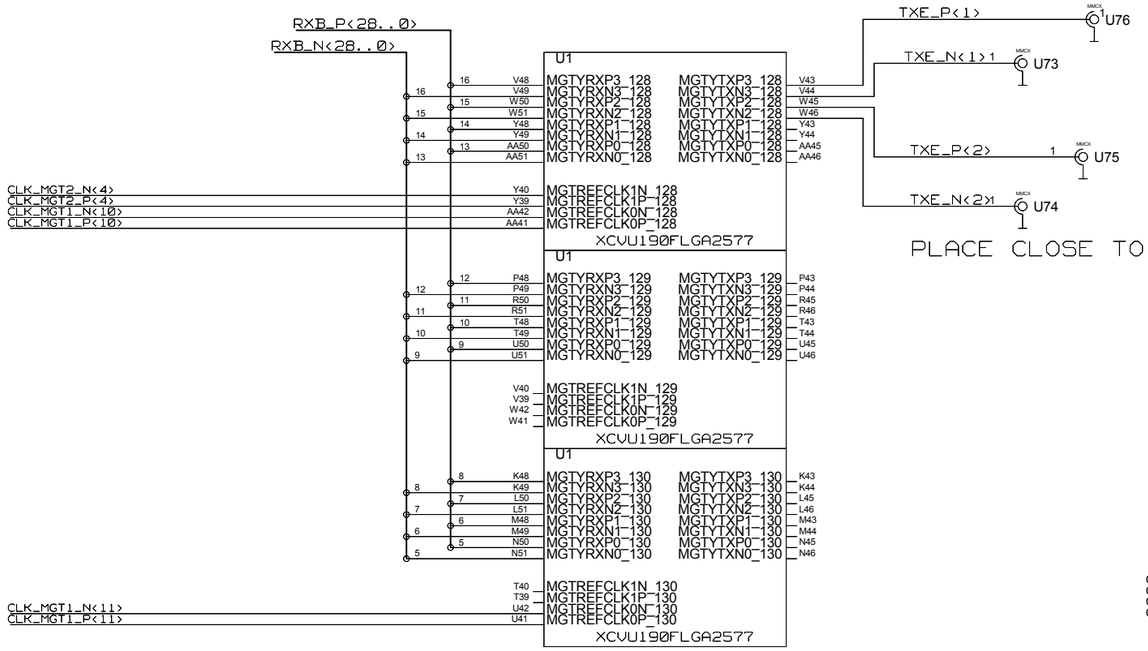

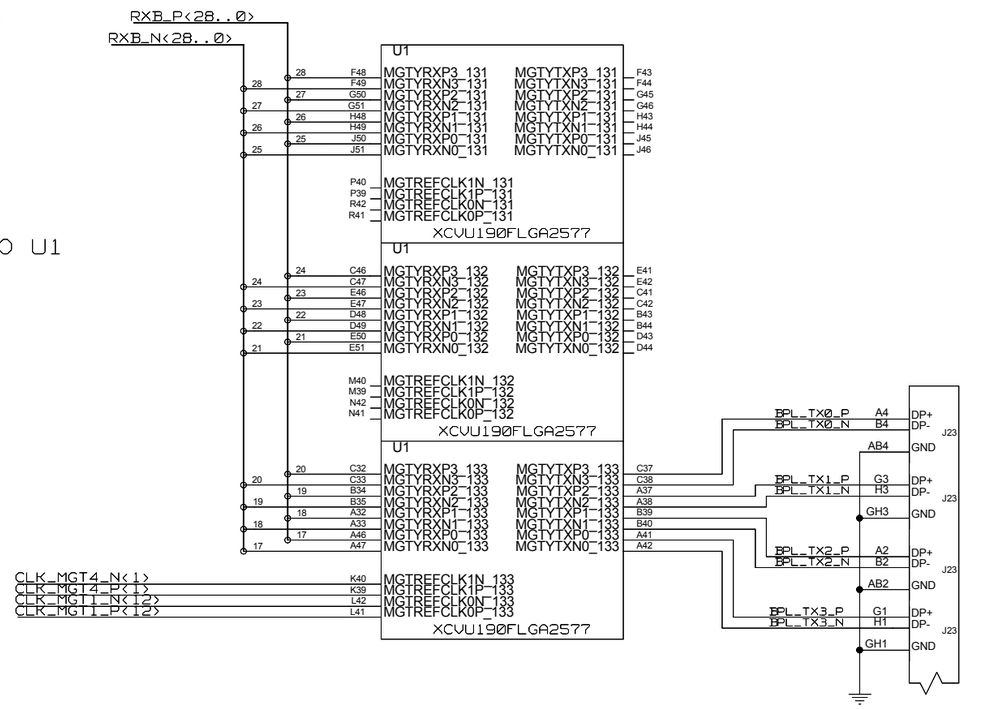

BANK
128
129
130
131
132
133

	NAME	DATE	SIGN
CHECKED	E.ROCCO		
CHECKED	U.SCHAEFER		
CHECKED	S.RAVE		
DRAWN	BAUSS	07.08.2015	

BLOCK TITLE: U1_MGT_REAL_TIME

DRAWING TITLE: RXB + TXC

UNIVERSITY OF MAINZ

SIZE	REV.	DRAWING NO.
C		
SCALE		SHEET 7 OF 7

REVISIONS				
ZONE	LTR	DESCRIPTION	DATE	APPR.

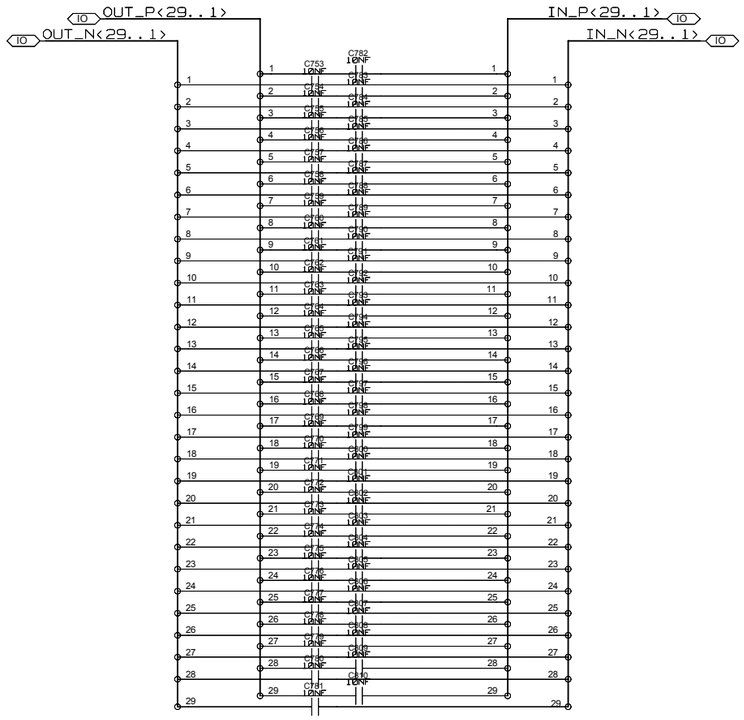

	NAME	DATE	SIGN
CHECKED	E.ROCCO		
CHECKED	U.SCHAEFER		
CHECKED	S.RAVE		
DRAWN	BAUSS		

BLOCK TITLE

DRAWING TITLE

UNIVERSITY OF MAINZ

SIZE C | REV. | DRAWING NO.

SCALE | SHEET OF

REVISIONS				
ZONE	LTR	DESCRIPTION	DATE	APPR.

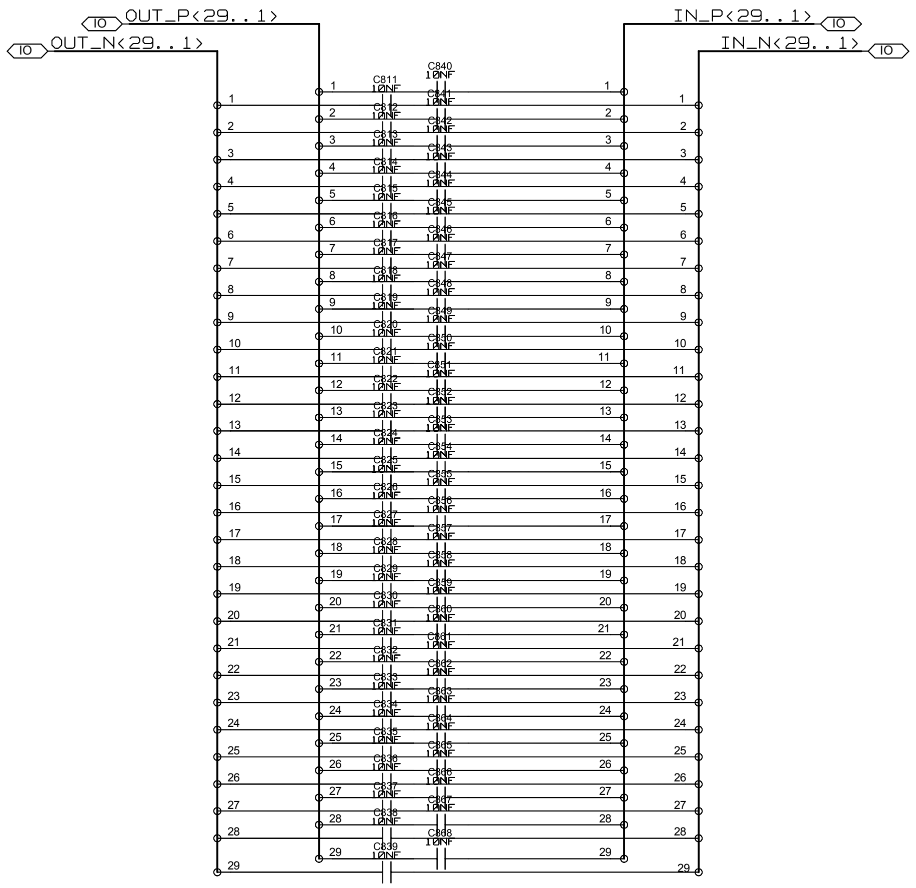

	NAME	DATE	SIGN
CHECKED	E.ROCCO		
CHECKED	U.SCHAEFER		
CHECKED	S.RAVE		
DRAWN	BAUSS		

DRAWING TITLE

BLOCK TITLE

UNIVERSITY OF MAINZ

SIZE C | REV. | DRAWING NO.

SCALE | SHEET OF

REVISIONS				
ZONE	LTR	DESCRIPTION	DATE	APPR.

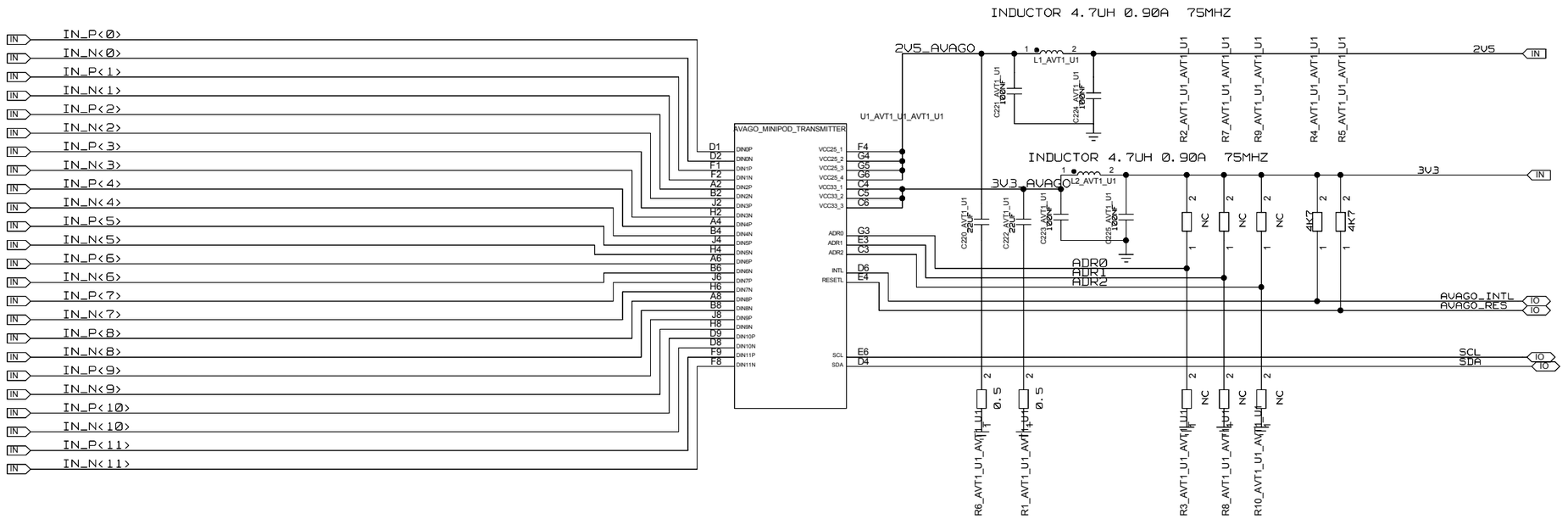

UNIVERSITY OF MAINZ	DRAWING TITLE: AVAGO TRANSMITTER		
	SIZE: C	REV.	DRAWING NO.
	SCALE		SHEET OF

REVISIONS				
ZONE	LTR	DESCRIPTION	DATE	APPR.

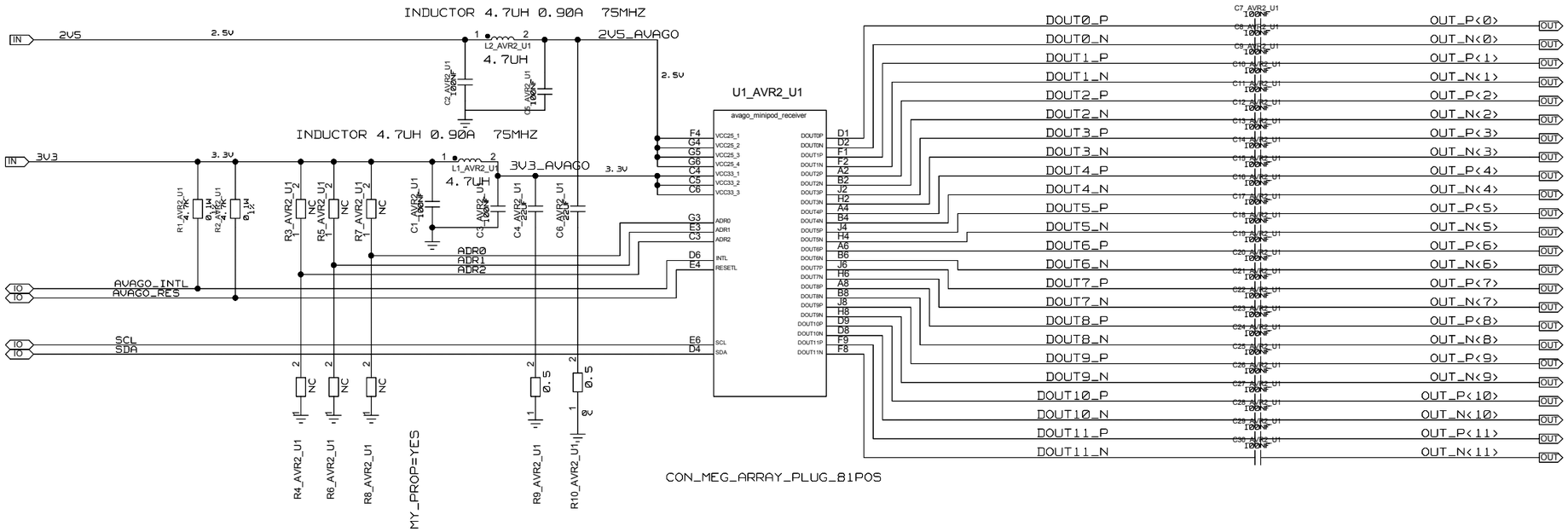

UNIVERSITY OF MAINZ	DRAWING TITLE: AVAGO RECEIVER		
	SIZE: C	REV.	DRAWING NO.
	SCALE		SHEET OF

REVISIONS				
ZONE	LTR	DESCRIPTION	DATE	APPR.

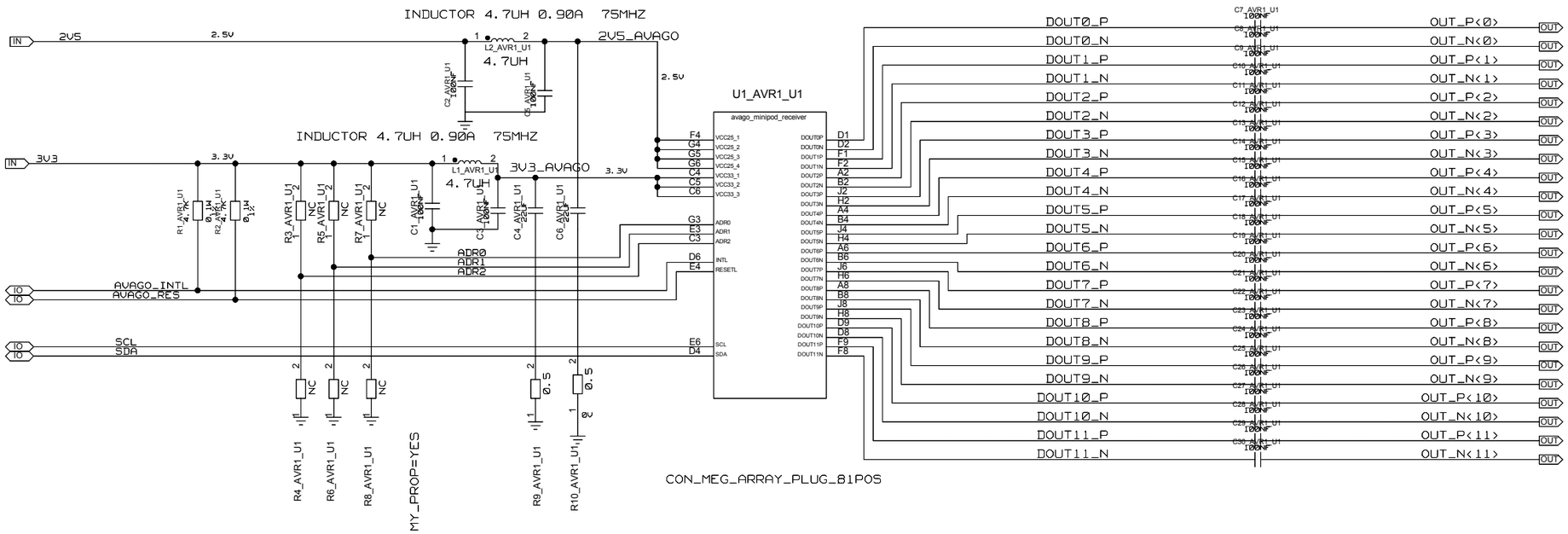

UNIVERSITY OF MAINZ	DRAWING TITLE: AVAGO RECEIVER		
	SIZE: C	REV.	DRAWING NO.
	SCALE		SHEET OF

REVISIONS				
ZONE	LTR	DESCRIPTION	DATE	APPR.

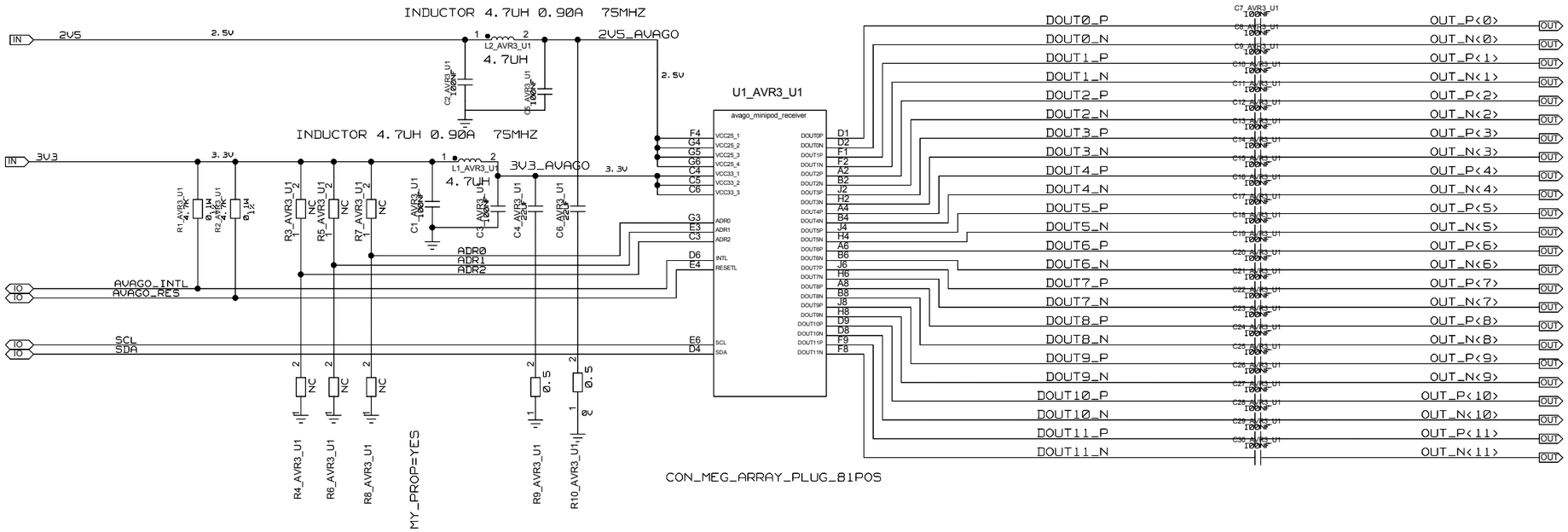

UNIVERSITY OF MAINZ	DRAWING TITLE: AVAGO RECEIVER		
	SIZE: C	REV.	DRAWING NO.
	SCALE		SHEET OF

REVISIONS				
ZONE	LTR	DESCRIPTION	DATE	APPR.

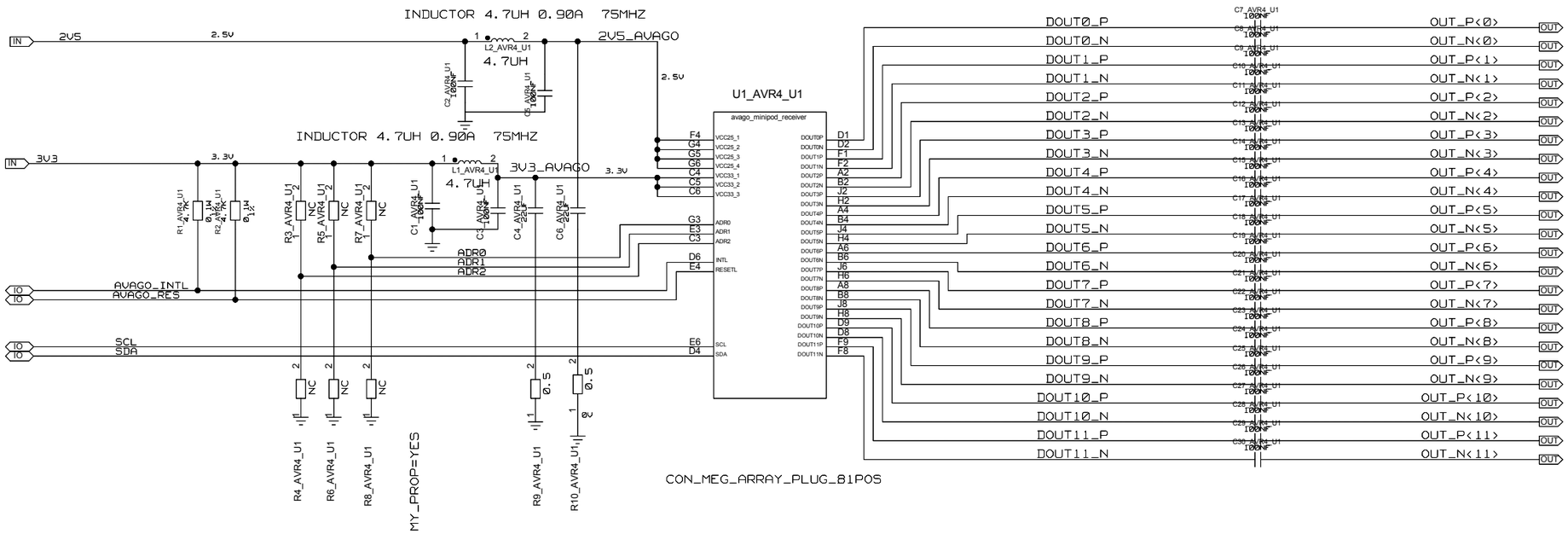

UNIVERSITY OF MAINZ	DRAWING TITLE: AVAGO RECEIVER		
	SIZE: C	REV.	DRAWING NO.
	SCALE		SHEET OF

REVISIONS				
ZONE	LTR	DESCRIPTION	DATE	APPR.

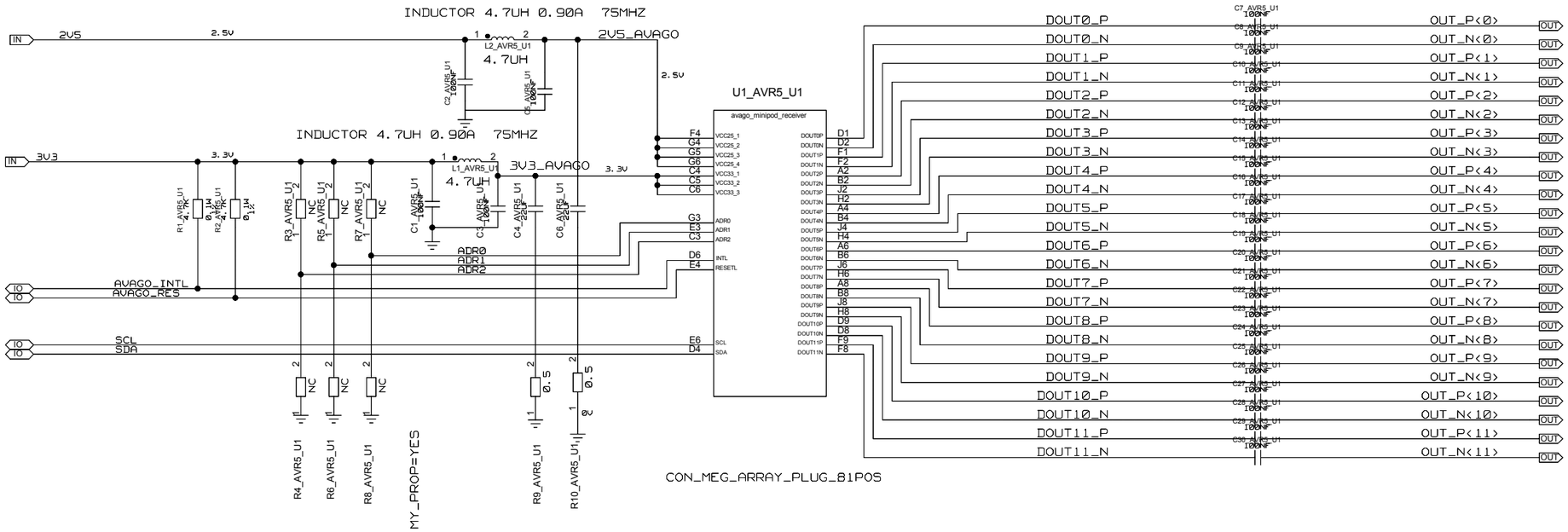

UNIVERSITY OF MAINZ	DRAWING TITLE: AVAGO RECEIVER		
	SIZE: C	REV.	DRAWING NO.
	SCALE		SHEET OF