REVISIONS				
ZONE	LTR	DESCRIPTION	DATE	APPR.

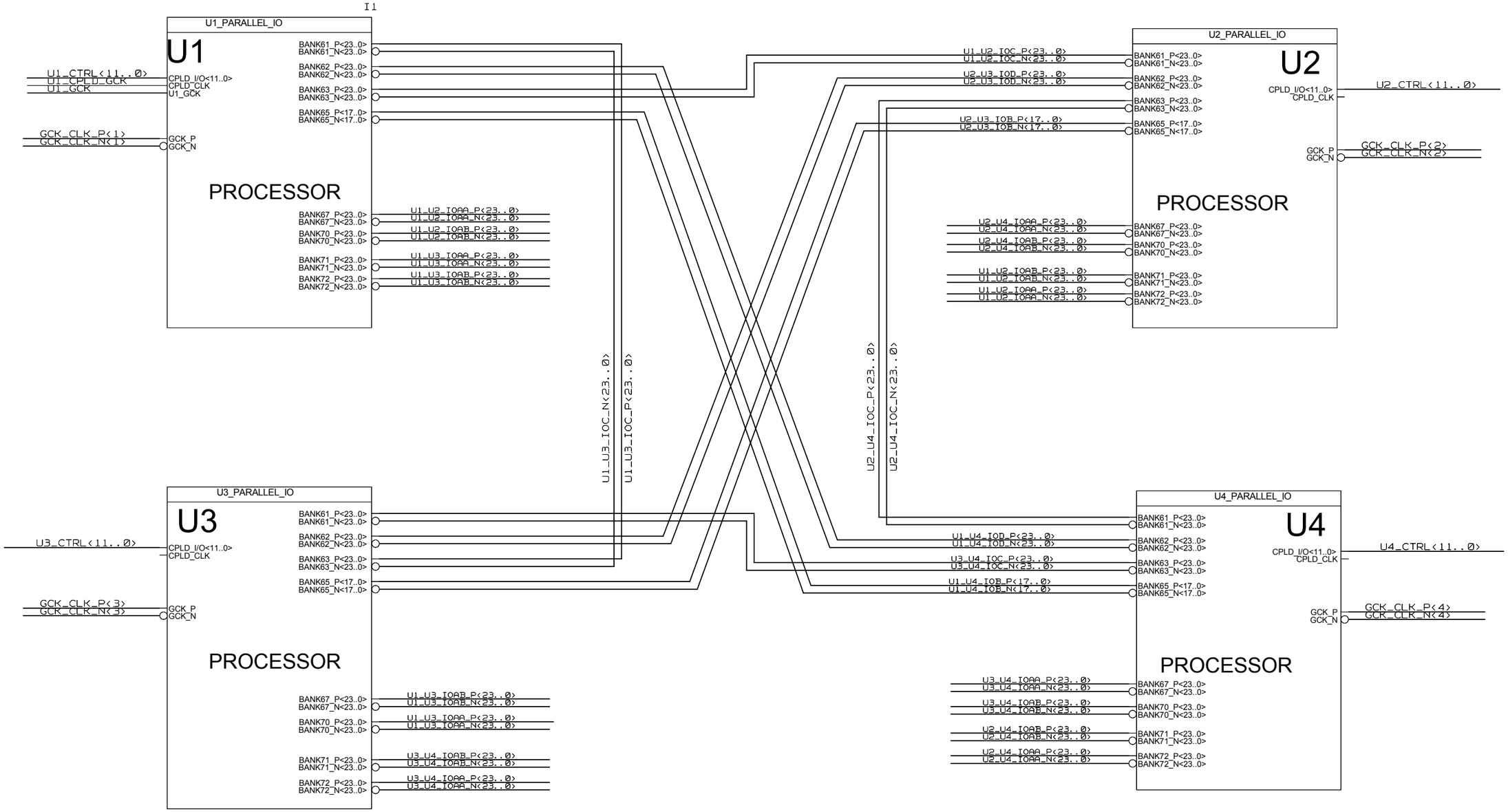

	NAME	DATE	SIGN
CHECKED	J. V.DE SOUZA		
CHECKED	U.SCHAEFER		
CHECKED	S.RAVE		
DRAWN	BAUSS		
BLOCK TITLE			

DRAWING TITLE

UNIVERSITY OF MAINZ

SIZE C | REV. | DRAWING NO.

SCALE | SHEET OF

REVISIONS				
ZONE	LTR	DESCRIPTION	DATE	APPR.

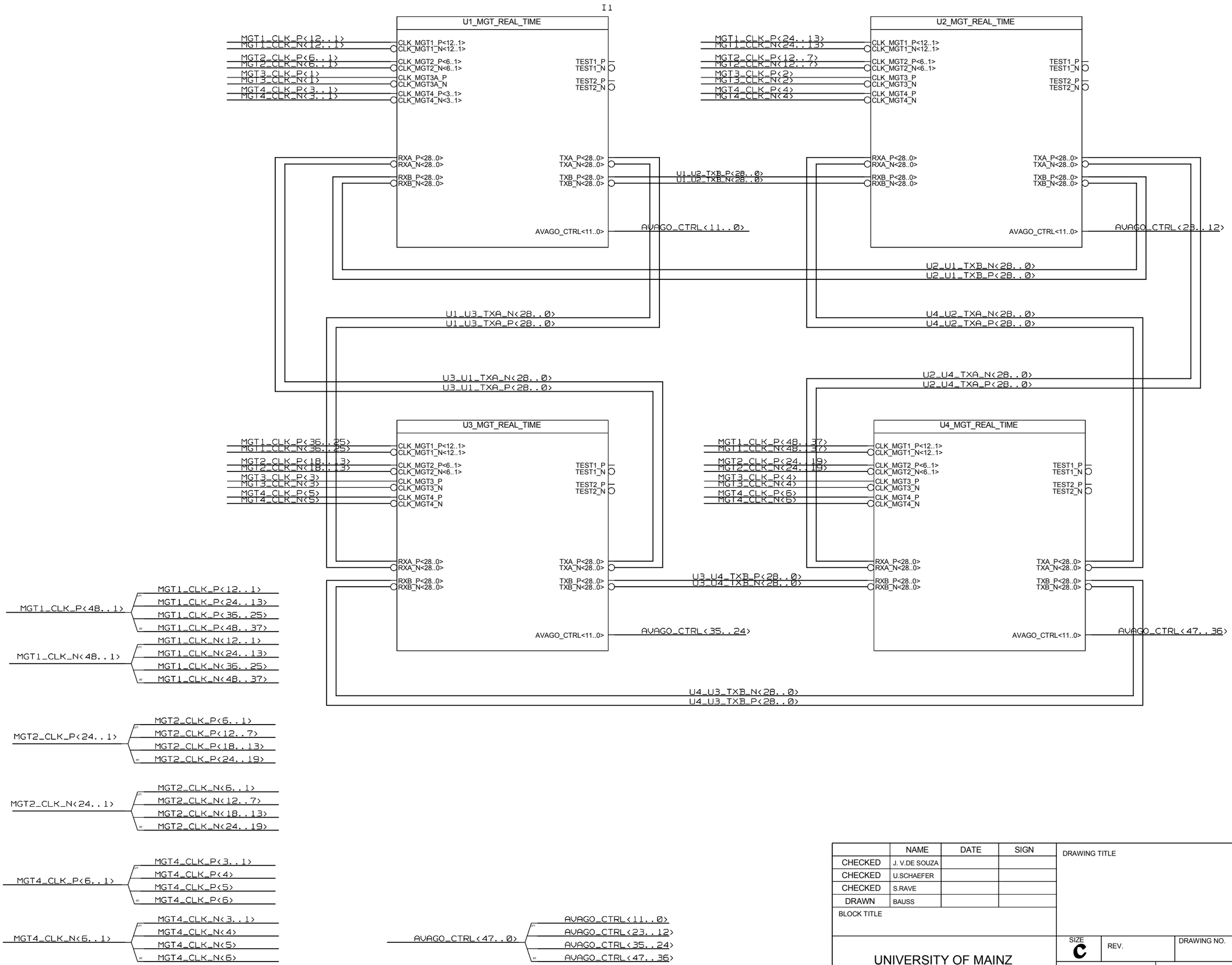

	NAME	DATE	SIGN
CHECKED	J. V.DE SOUZA		
CHECKED	U.SCHAEFER		
CHECKED	S.RAVE		
DRAWN	BAUSS		

BLOCK TITLE

DRAWING TITLE

UNIVERSITY OF MAINZ

SIZE C | REV. | DRAWING NO.

SCALE | SHEET OF

REVISIONS				
ZONE	LTR	DESCRIPTION	DATE	APPR.

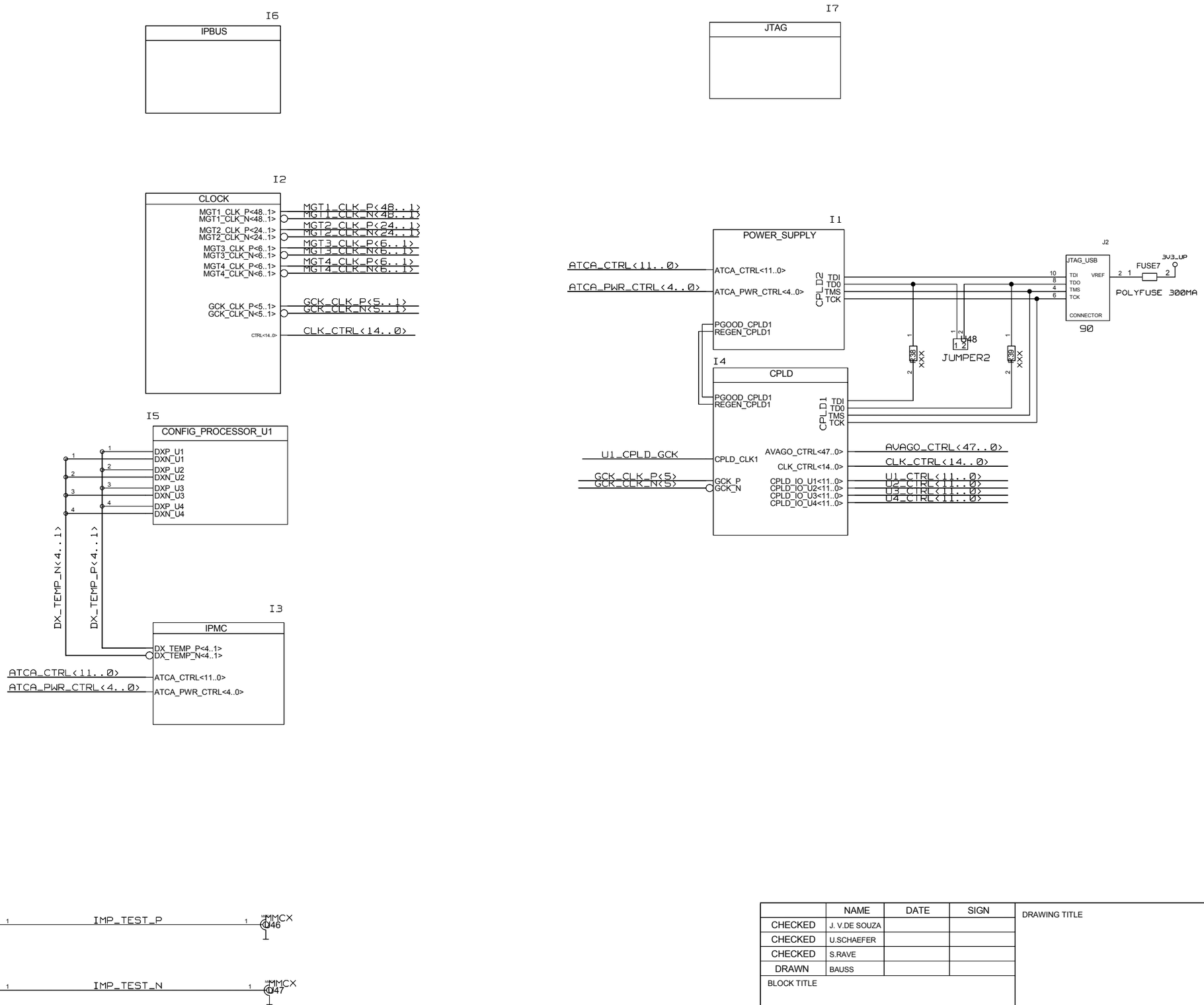

	NAME	DATE	SIGN
CHECKED	J. V.DE SOUZA		
CHECKED	U.SCHAEFER		
CHECKED	S.RAVE		
DRAWN	BAUSS		

BLOCK TITLE

DRAWING TITLE

UNIVERSITY OF MAINZ

SIZE C | REV. | DRAWING NO.

SCALE | SHEET OF

REVISIONS				
ZONE	LTR	DESCRIPTION	DATE	APPR.

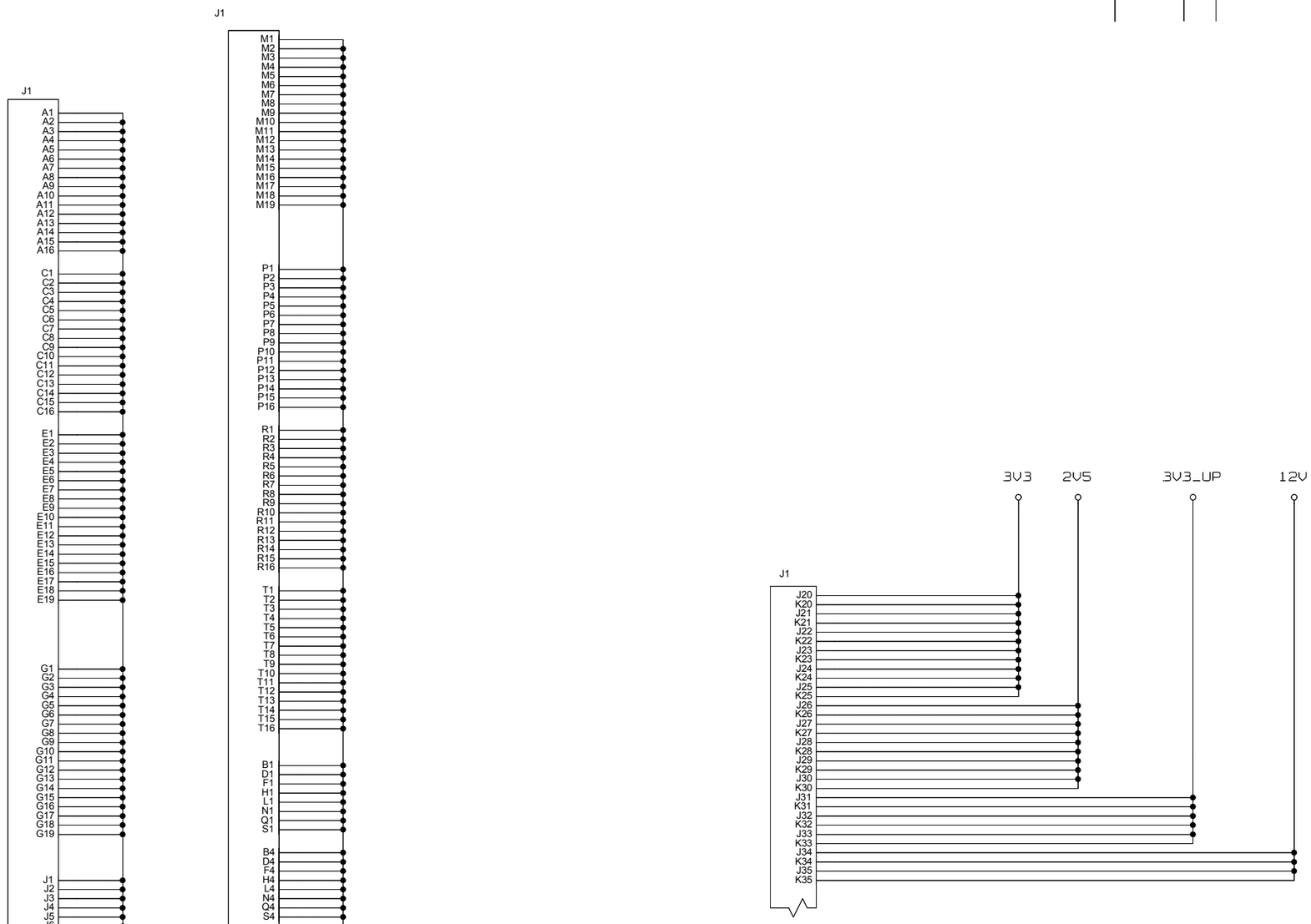

	NAME	DATE	SIGN
CHECKED	J. V.DE SOUZA		
CHECKED	U.SCHAEFER		
CHECKED	S.RAVE		
DRAWN	BAUSS		

BLOCK TITLE

DRAWING TITLE

UNIVERSITY OF MAINZ

SIZE C | REV. | DRAWING NO.

SCALE | SHEET OF

REVISIONS				
ZONE	LTR	DESCRIPTION	DATE	APPR.

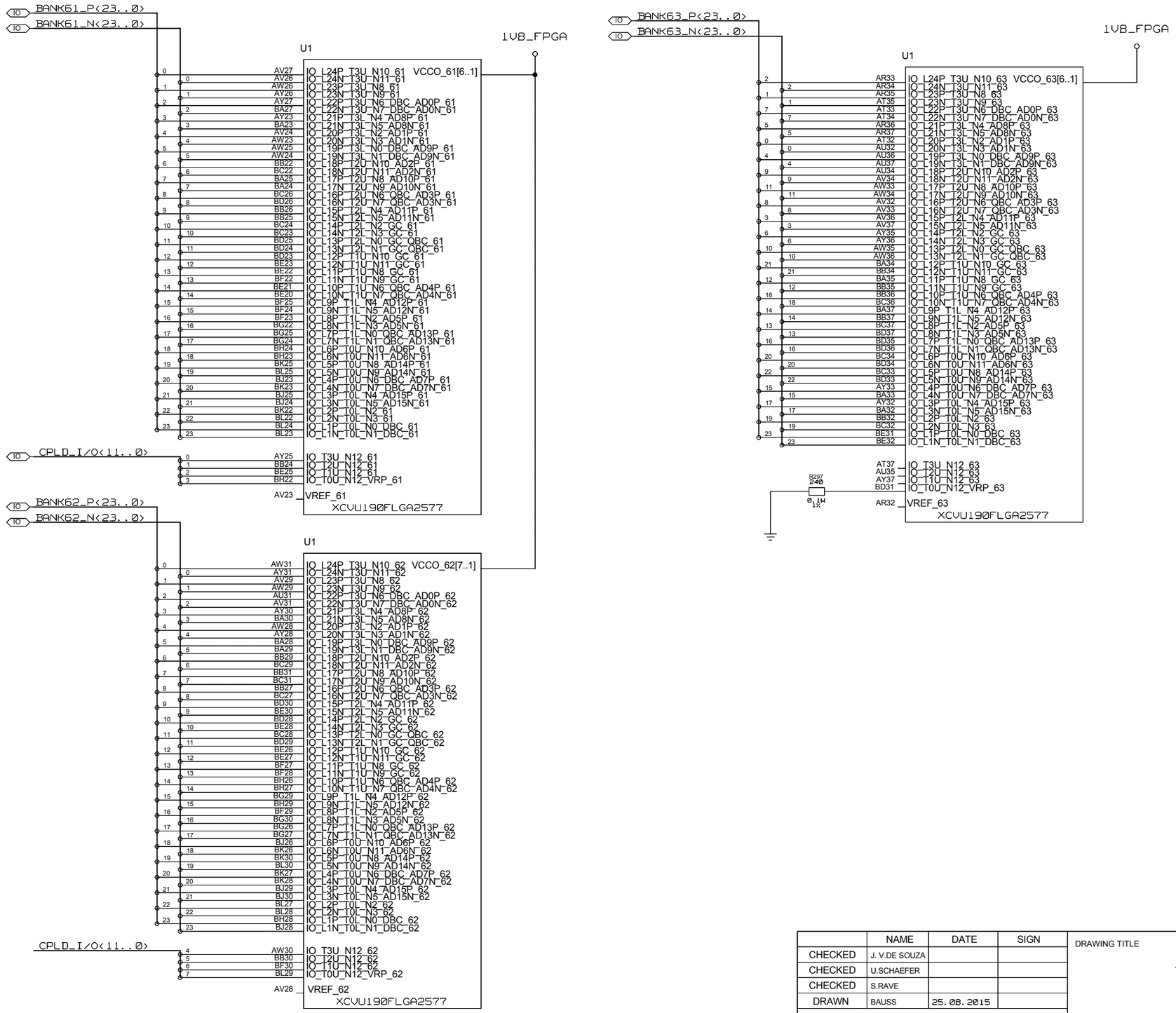

BANK
61
62
63

	NAME	DATE	SIGN
CHECKED	J. V.DE SOUZA		
CHECKED	U.SCHAEFER		
CHECKED	S.RAVE		
DRAWN	BAUSS	25.08.2015	

BLOCK TITLE: U1_PARALLEL_I/O

DRAWING TITLE: JFEX

UNIVERSITY OF MAINZ

SIZE: C | REV. | DRAWING NO.

SCALE | SHEET 1 OF 5

REVISIONS				
ZONE	LTR	DESCRIPTION	DATE	APPR.

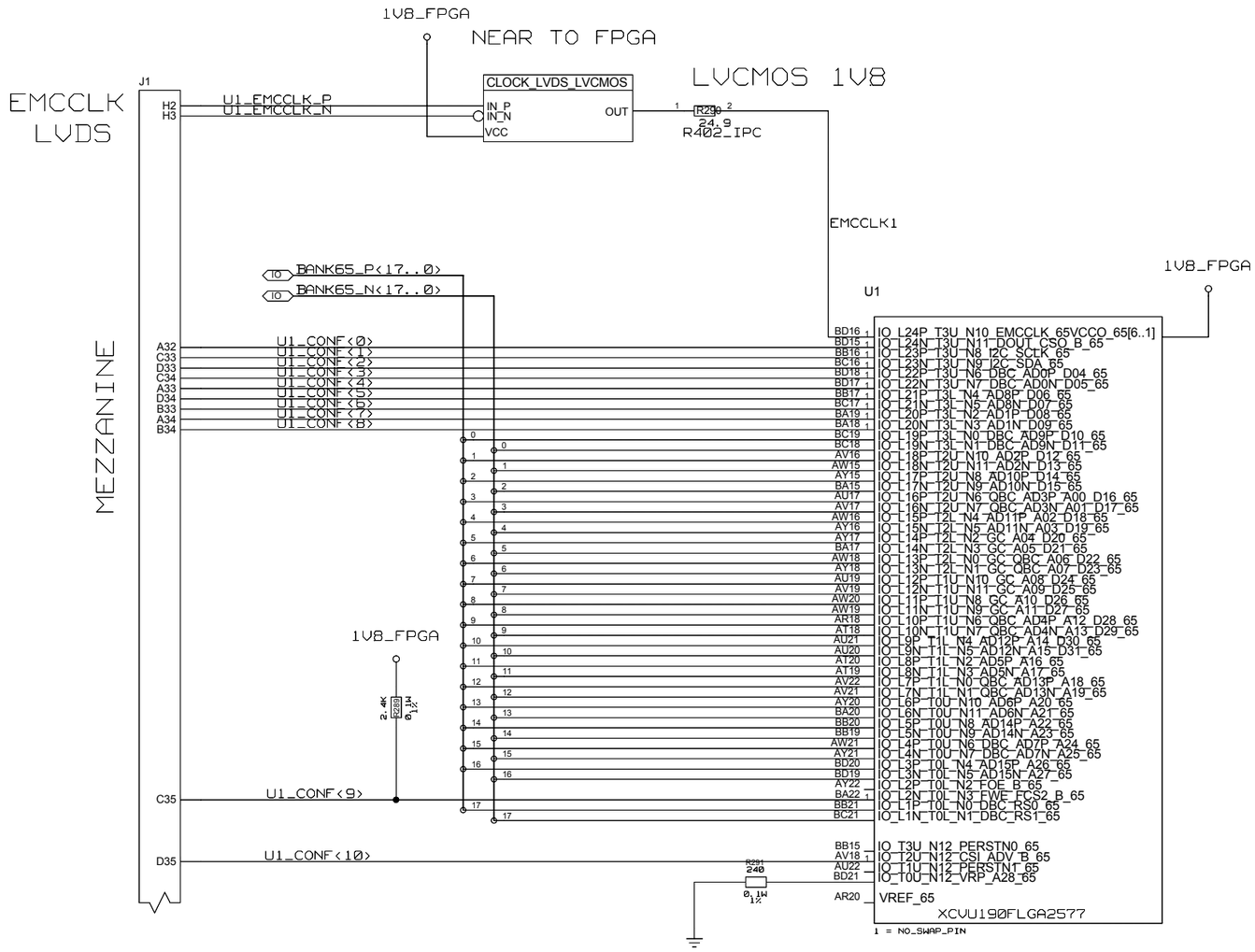

BANK
65

	NAME	DATE	SIGN
CHECKED	J. V.DE SOUZA		
CHECKED	U.SCHAEFER		
CHECKED	S.RAVE		
DRAWN	BAUSS	25.08.2015	

BLOCK TITLE
U1_PARALLEL_I/O

DRAWING TITLE
JFEX

UNIVERSITY OF MAINZ

SIZE C | REV. | DRAWING NO.

SCALE | SHEET 2 OF 5

REVISIONS				
ZONE	LTR	DESCRIPTION	DATE	APPR.

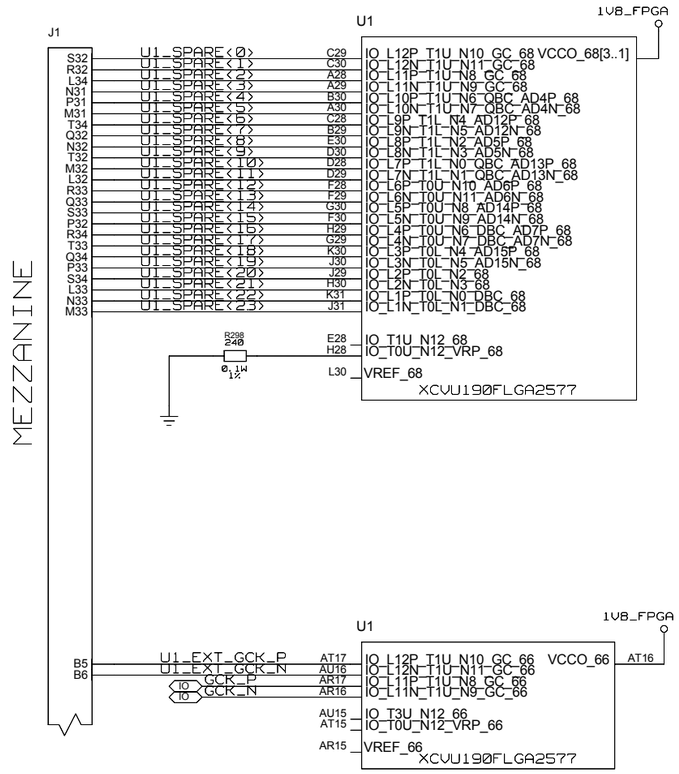

BANK
66
68

	NAME	DATE	SIGN
CHECKED	J. V.DE SOUZA		
CHECKED	U.SCHAEFER		
CHECKED	S.RAVE		
DRAWN	BAUSS	25.08.2015	

BLOCK TITLE
U1_PARALLEL_I/O

DRAWING TITLE
JFEX

UNIVERSITY OF MAINZ

SIZE C | REV. | DRAWING NO.

SCALE | SHEET 3 OF 5

REVISIONS				
ZONE	LTR	DESCRIPTION	DATE	APPR.

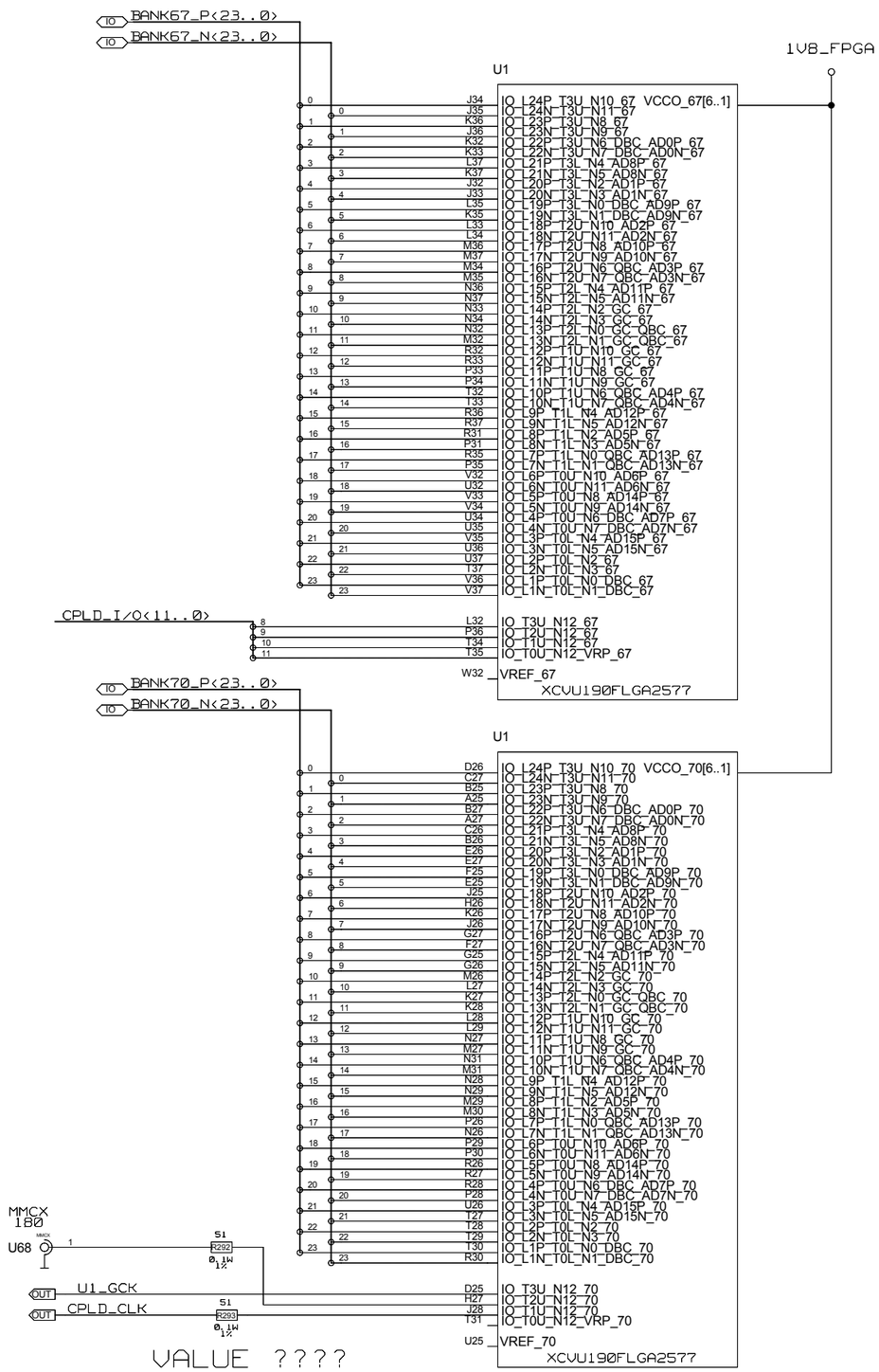

VALUE ????

BANK
67
70

	NAME	DATE	SIGN
CHECKED	J. V.DE SOUZA		
CHECKED	U.SCHAEFER		
CHECKED	S.RAVE		
DRAWN	BAUSS	25.08.2015	

BLOCK TITLE
U1_PARALLEL_I/O

DRAWING TITLE
JFEX

UNIVERSITY OF MAINZ

SIZE C | REV. | DRAWING NO.

SCALE

SHEET 4 OF 5

REVISIONS				
ZONE	LTR	DESCRIPTION	DATE	APPR.

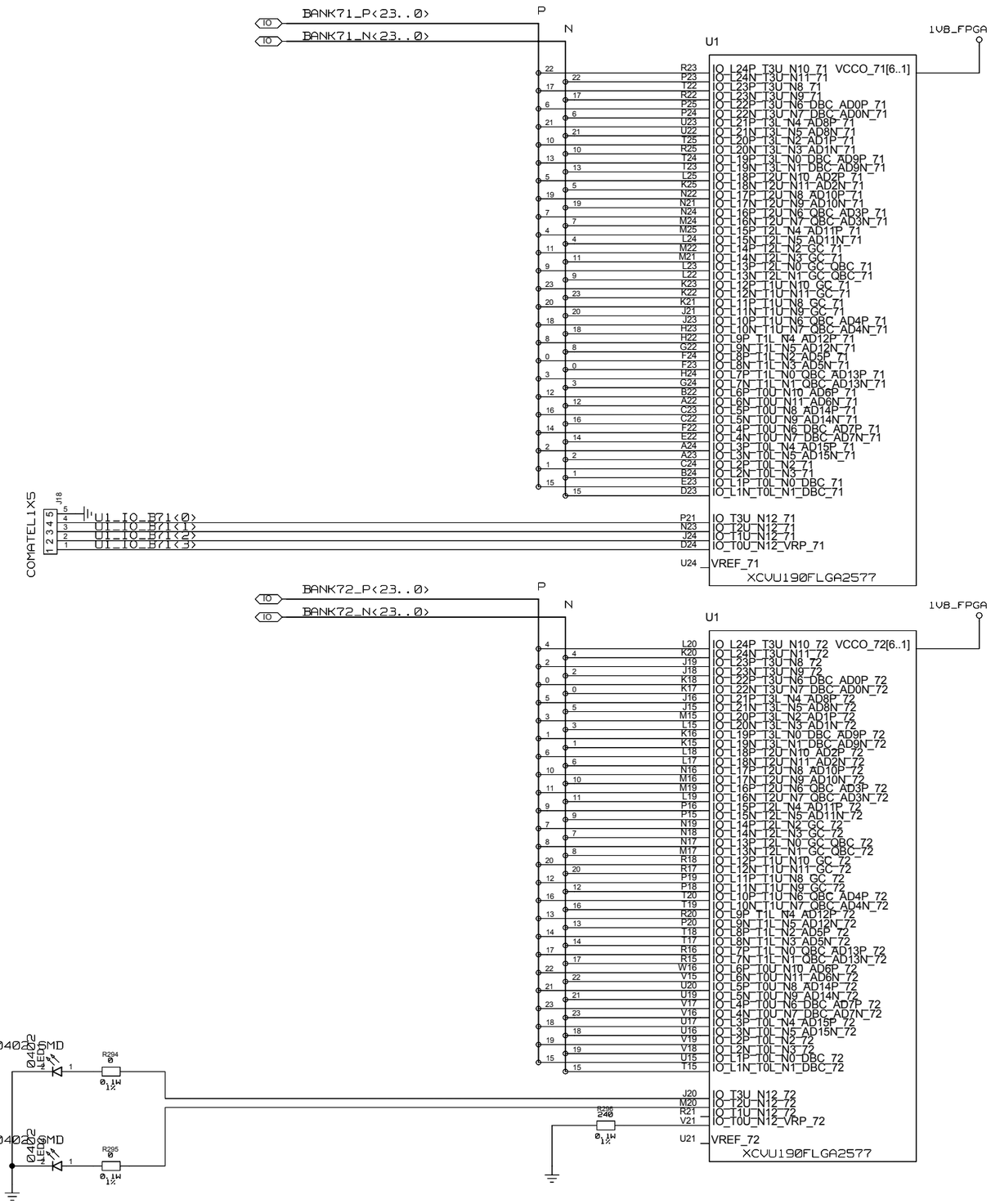

BANK
71
72

	NAME	DATE	SIGN
CHECKED	J. V.DE SOUZA		
CHECKED	U.SCHAEFER		
CHECKED	S.RAVE		
DRAWN	BAUSS	25.08.2015	

BLOCK TITLE
U1_PARALLEL_I/O

DRAWING TITLE
JFEX

UNIVERSITY OF MAINZ

SIZE C | REV. | DRAWING NO.

SCALE | SHEET 5 OF 5

REVISIONS				
ZONE	LTR	DESCRIPTION	DATE	APPR.

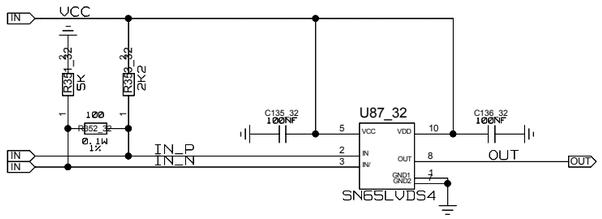

	NAME	DATE	SIGN
CHECKED	J. V.DE SOUZA		
CHECKED	U.SCHAEFER		
CHECKED	S.RAVE		
DRAWN	BAUSS		

BLOCK TITLE
CLOCK_LVDS_LVCMOS

DRAWING TITLE
JFEX

UNIVERSITY OF MAINZ

SIZE C | REV. | DRAWING NO.

SCALE | SHEET OF

REVISIONS				
ZONE	LTR	DESCRIPTION	DATE	APPR.

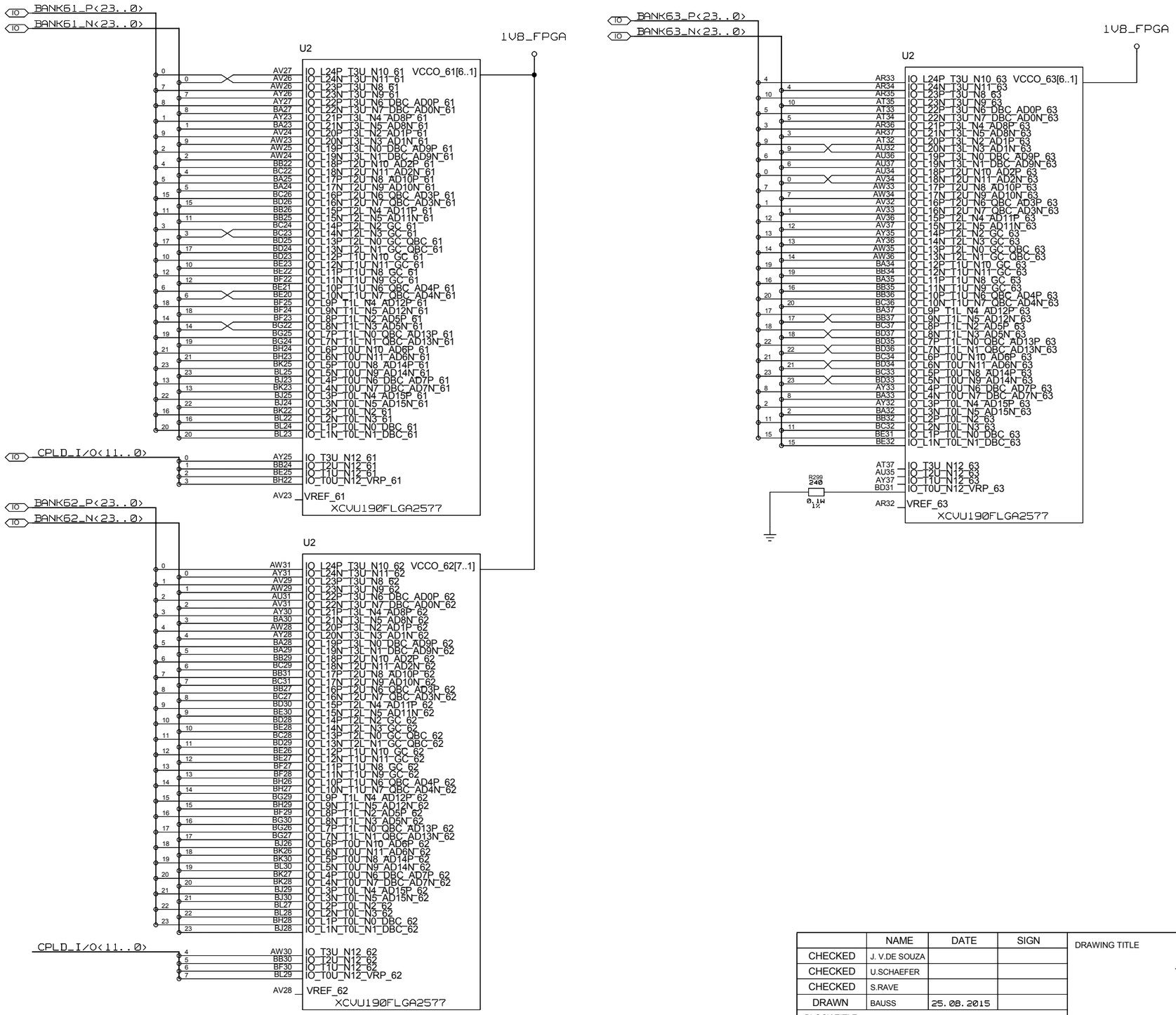

BANK
61
62
63

	NAME	DATE	SIGN
CHECKED	J. V.DE SOUZA		
CHECKED	U.SCHAEFER		
CHECKED	S.RAVE		
DRAWN	BAUSS	25.08.2015	

BLOCK TITLE: U2_PARALLEL_I/O

DRAWING TITLE: JFEX

UNIVERSITY OF MAINZ

SIZE: C | REV. | DRAWING NO.

SCALE | SHEET 1 OF 5

REVISIONS				
ZONE	LTR	DESCRIPTION	DATE	APPR.

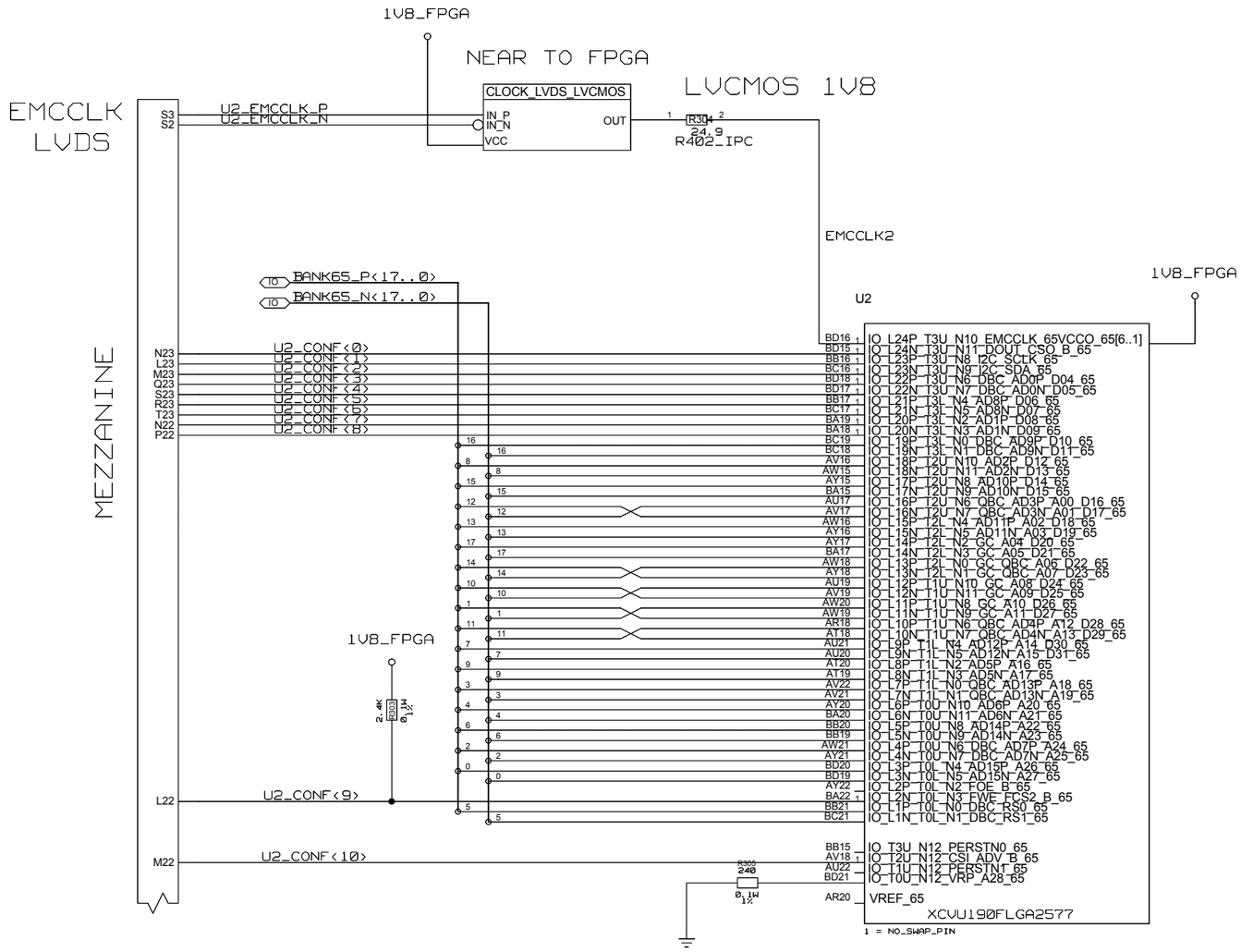

BANK
65

	NAME	DATE	SIGN
CHECKED	J. V.DE SOUZA		
CHECKED	U.SCHAEFER		
CHECKED	S.RAVE		
DRAWN	BAUSS	25.08.2015	

BLOCK TITLE
U2_PARALLEL_I/O

DRAWING TITLE
JFEX

UNIVERSITY OF MAINZ

SIZE C | REV. | DRAWING NO.

SCALE | SHEET 2 OF 5

REVISIONS				
ZONE	LTR	DESCRIPTION	DATE	APPR.

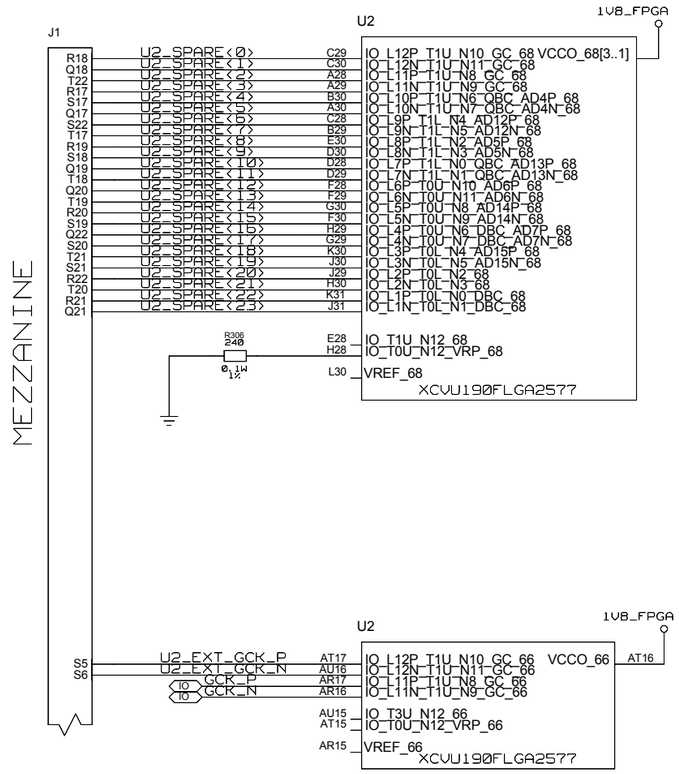

BANK
66
68

	NAME	DATE	SIGN
CHECKED	J. V.DE SOUZA		
CHECKED	U.SCHAEFER		
CHECKED	S.RAVE		
DRAWN	BAUSS	25.08.2015	

BLOCK TITLE
U2_PARALLEL_I/O

DRAWING TITLE
JFEX

UNIVERSITY OF MAINZ

SIZE C | REV. | DRAWING NO.

SCALE | SHEET 3 OF 5

REVISIONS				
ZONE	LTR	DESCRIPTION	DATE	APPR.

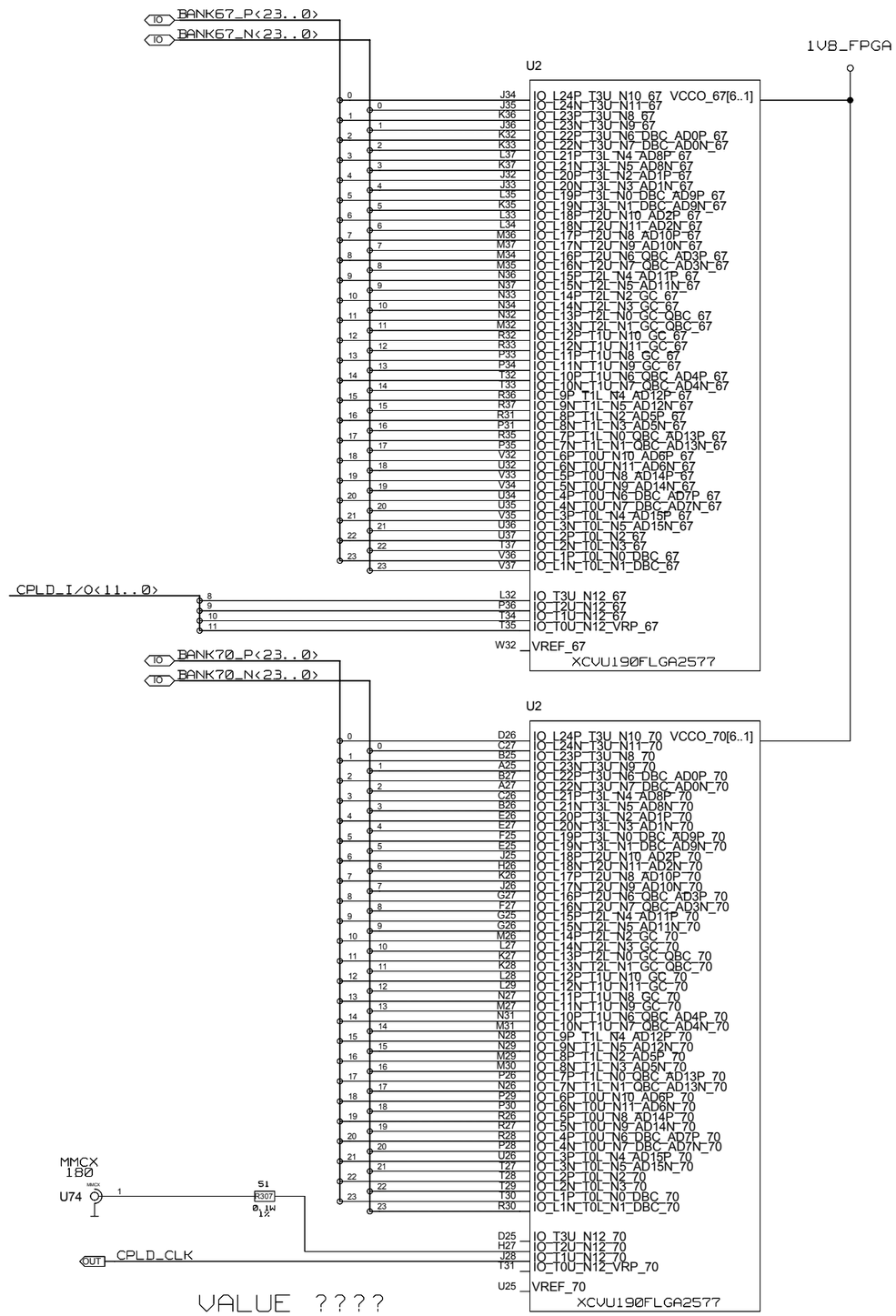

BANK
67
70

	NAME	DATE	SIGN
CHECKED	J. V.DE SOUZA		
CHECKED	U.SCHAEFER		
CHECKED	S.RAVE		
DRAWN	BAUSS	25.08.2015	

BLOCK TITLE
U2_PARALLEL_I/O

DRAWING TITLE
JFEX

UNIVERSITY OF MAINZ

SIZE C | REV. | DRAWING NO.

SCALE

SHEET 4 OF 5

REVISIONS				
ZONE	LTR	DESCRIPTION	DATE	APPR.

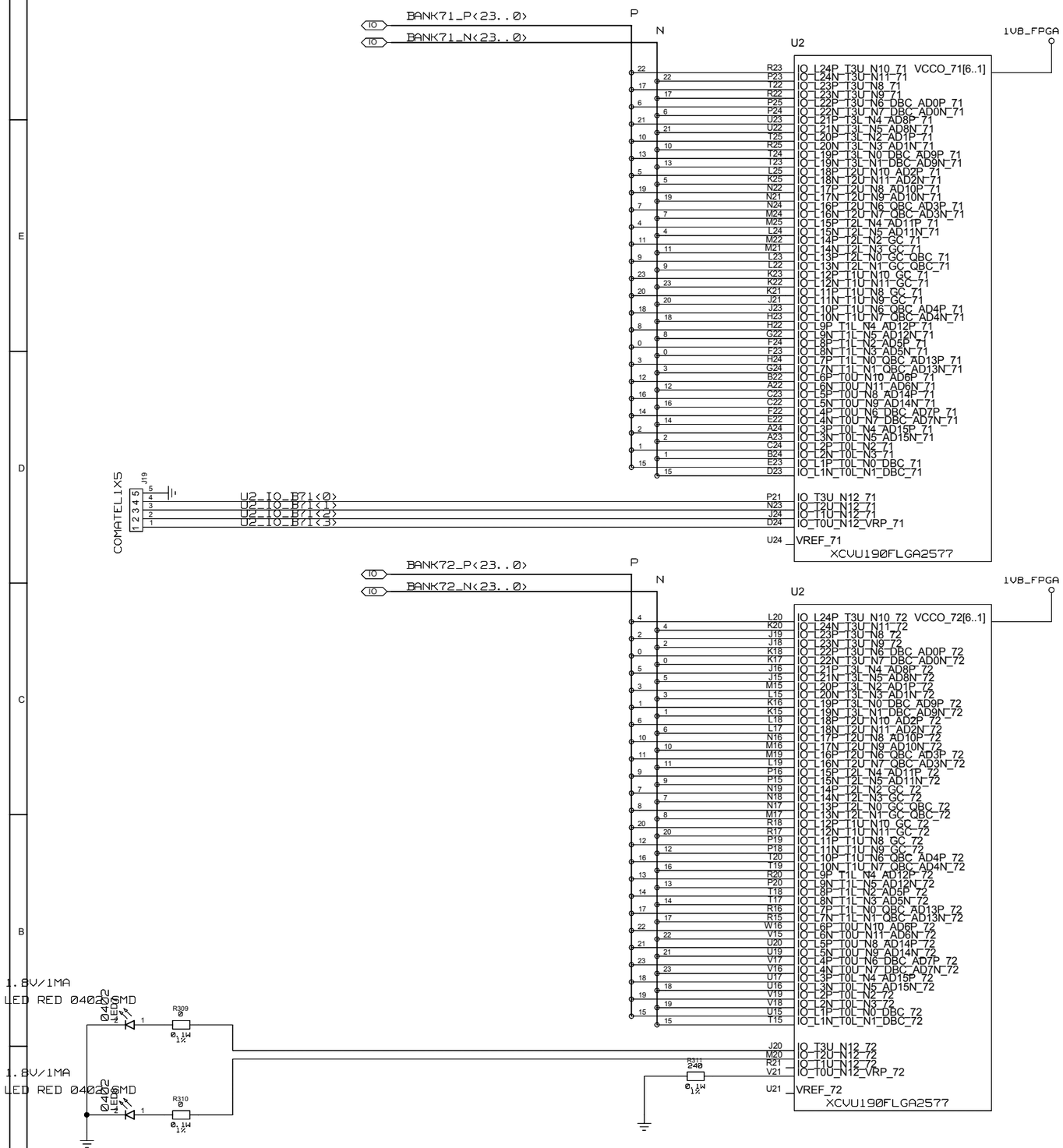

BANK
71
72

	NAME	DATE	SIGN
CHECKED	J. V.DE SOUZA		
CHECKED	U.SCHAEFER		
CHECKED	S.RAVE		
DRAWN	BAUSS	25.08.2015	

BLOCK TITLE: U2_PARALLEL_I/O

DRAWING TITLE: JFEX

UNIVERSITY OF MAINZ

SIZE: C | REV. | DRAWING NO.

SCALE | SHEET 5 OF 5

REVISIONS				
ZONE	LTR	DESCRIPTION	DATE	APPR.

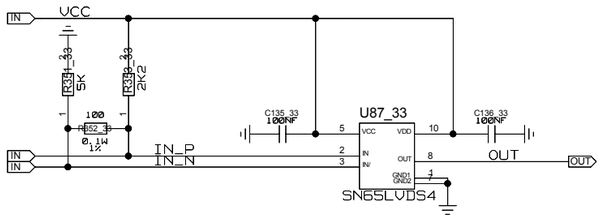

	NAME	DATE	SIGN
CHECKED	J. V.DE SOUZA		
CHECKED	U.SCHAEFER		
CHECKED	S.RAVE		
DRAWN	BAUSS		

BLOCK TITLE
CLOCK_LVDS_LVCMOS

DRAWING TITLE
JFEX

UNIVERSITY OF MAINZ

SIZE C | REV. | DRAWING NO.

SCALE | SHEET OF

REVISIONS				
ZONE	LTR	DESCRIPTION	DATE	APPR.

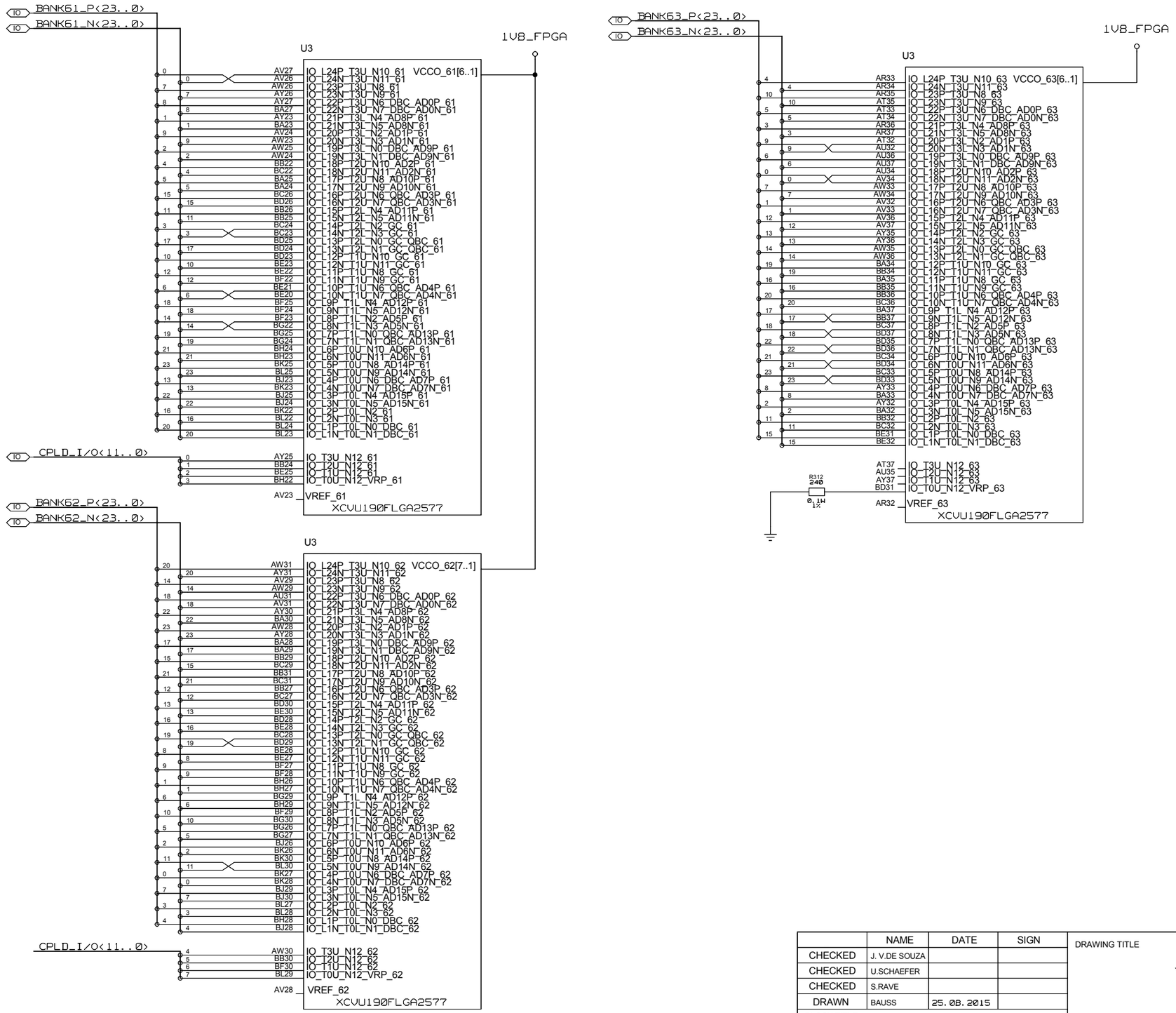

BANK
61
62
63

	NAME	DATE	SIGN
CHECKED	J. V.DE SOUZA		
CHECKED	U.SCHAEFER		
CHECKED	S.RAVE		
DRAWN	BAUSS	25.08.2015	

BLOCK TITLE: U3_PARALLEL_I/O

DRAWING TITLE: JFEX

UNIVERSITY OF MAINZ

SIZE: C | REV. | DRAWING NO.

SCALE | SHEET 1 OF 5

REVISIONS				
ZONE	LTR	DESCRIPTION	DATE	APPR.

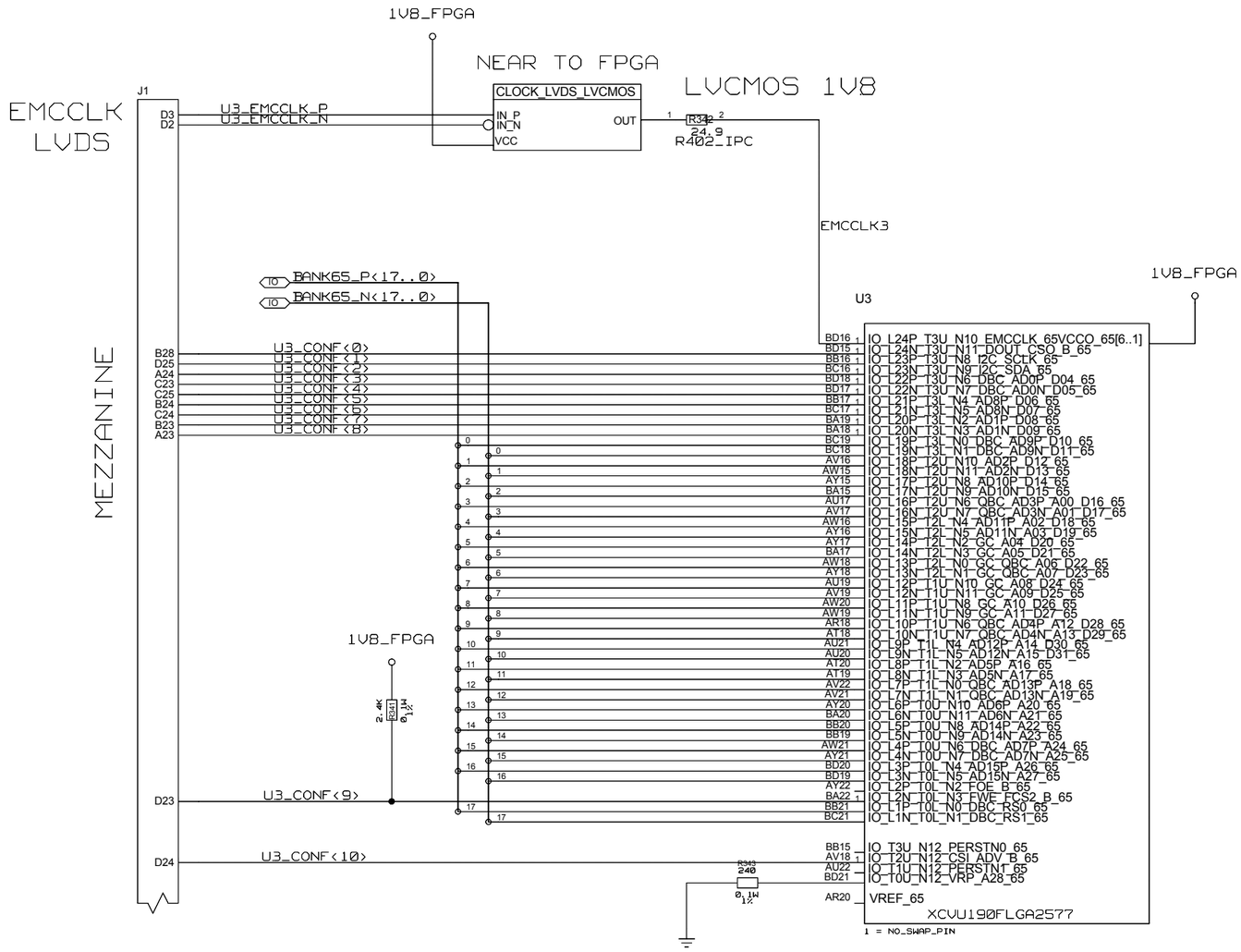

BANK
65

	NAME	DATE	SIGN
CHECKED	J. V.DE SOUZA		
CHECKED	U.SCHAEFER		
CHECKED	S.RAVE		
DRAWN	BAUSS	25.08.2015	

BLOCK TITLE
U3_PARALLEL_I/O

DRAWING TITLE
JFEX

UNIVERSITY OF MAINZ

SIZE C | REV. | DRAWING NO.

SCALE | SHEET 2 OF 5

REVISIONS				
ZONE	LTR	DESCRIPTION	DATE	APPR.

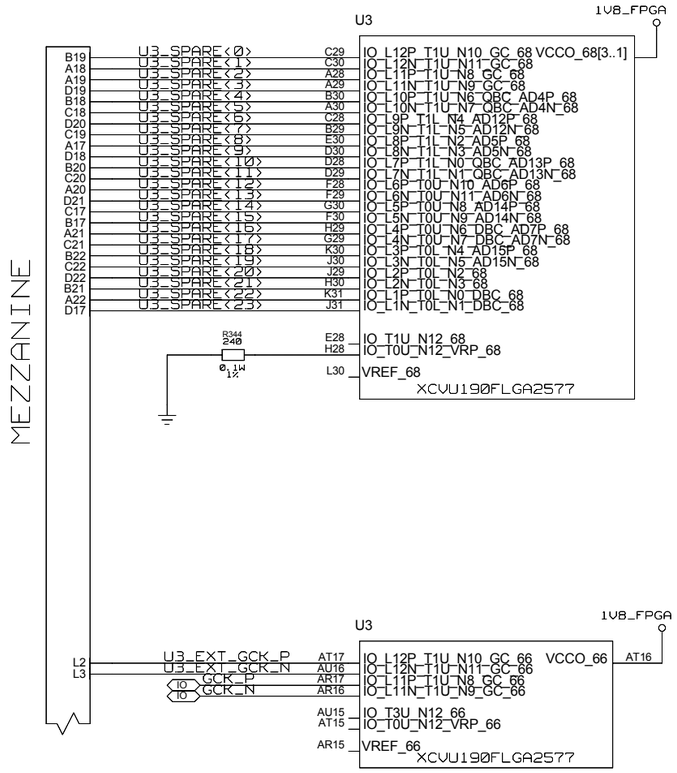

BANK
66
68

	NAME	DATE	SIGN
CHECKED	J. V.DE SOUZA		
CHECKED	U.SCHAEFER		
CHECKED	S.RAVE		
DRAWN	BAUSS	25.08.2015	

BLOCK TITLE
U3_PARALLEL_I/O

DRAWING TITLE
JFEX

UNIVERSITY OF MAINZ

SIZE C | REV. | DRAWING NO.

SCALE | SHEET 3 OF 5

REVISIONS				
ZONE	LTR	DESCRIPTION	DATE	APPR.

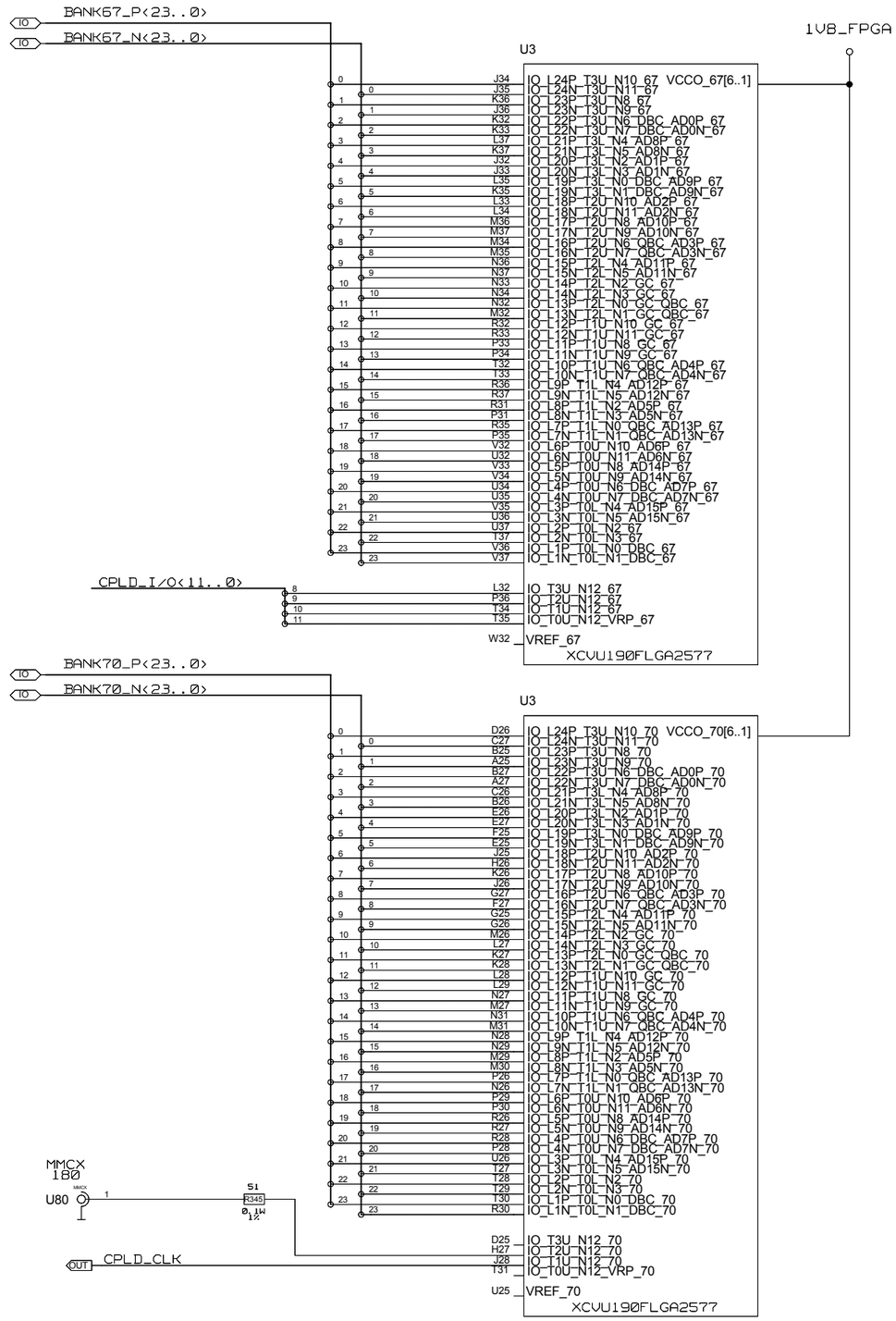

BANK
67
70

	NAME	DATE	SIGN
CHECKED	J. V.DE SOUZA		
CHECKED	U.SCHAEFER		
CHECKED	S.RAVE		
DRAWN	BAUSS	25.08.2015	

BLOCK TITLE
U3_PARALLEL_I/O

DRAWING TITLE
JFEX

UNIVERSITY OF MAINZ

SIZE C | REV. | DRAWING NO.

SCALE | SHEET 4 OF 5

REVISIONS				
ZONE	LTR	DESCRIPTION	DATE	APPR.

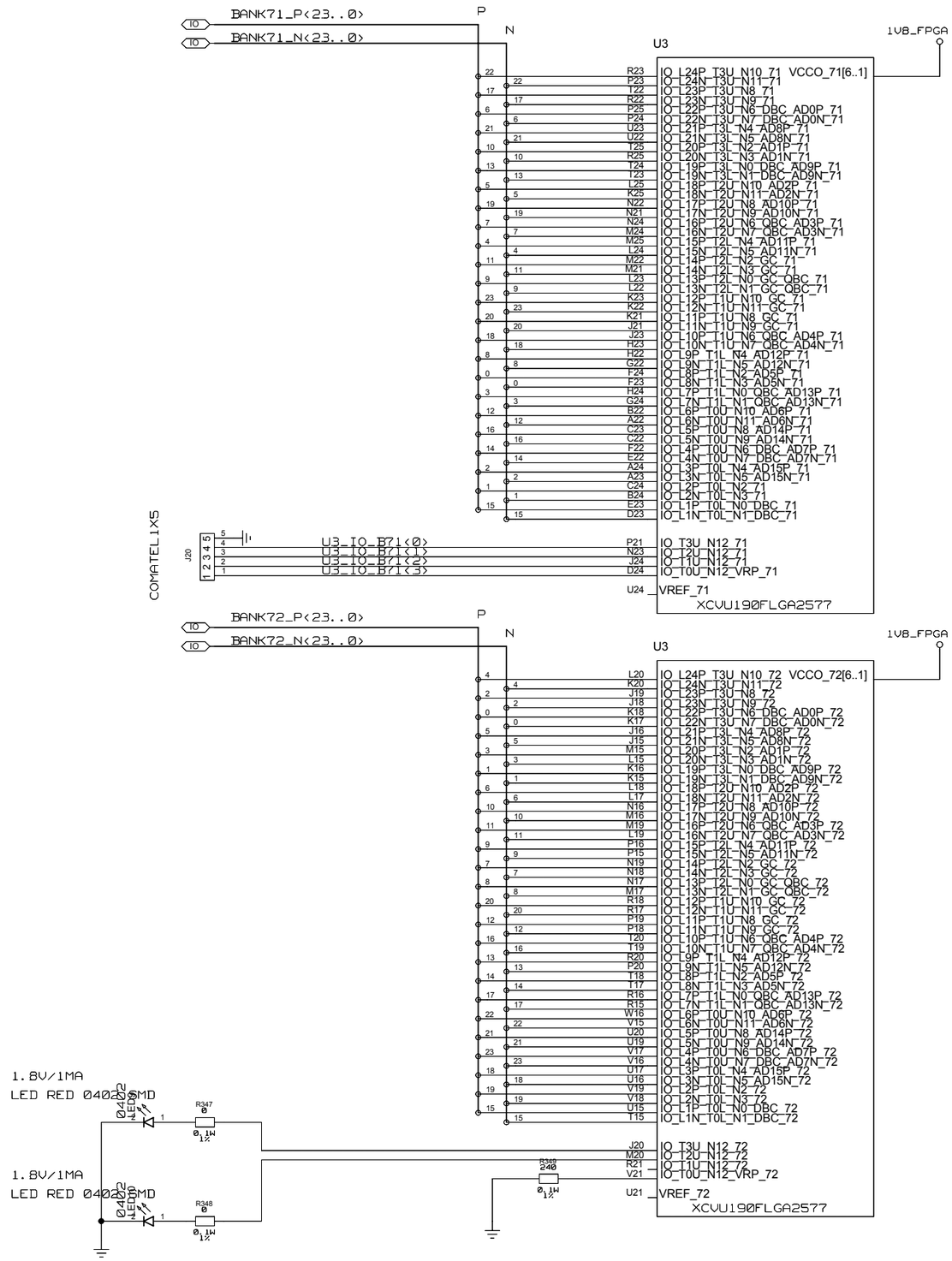

BANK
71
72

	NAME	DATE	SIGN
CHECKED	J. V.DE SOUZA		
CHECKED	U.SCHAEFER		
CHECKED	S.RAVE		
DRAWN	BAUSS	25.08.2015	

BLOCK TITLE
U3_PARALLEL_I/O

DRAWING TITLE
JFEX

UNIVERSITY OF MAINZ

SIZE C | REV. | DRAWING NO.

SCALE | SHEET 5 OF 5

REVISIONS				
ZONE	LTR	DESCRIPTION	DATE	APPR.

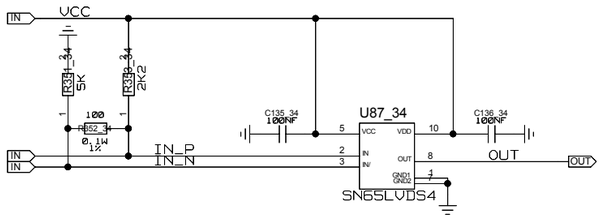

	NAME	DATE	SIGN
CHECKED	J. V.DE SOUZA		
CHECKED	U.SCHAEFER		
CHECKED	S.RAVE		
DRAWN	BAUSS		

BLOCK TITLE
CLOCK_LVDS_LVCMOS

DRAWING TITLE
JFEX

UNIVERSITY OF MAINZ

SIZE C | REV. | DRAWING NO.

SCALE | SHEET OF

REVISIONS				
ZONE	LTR	DESCRIPTION	DATE	APPR.

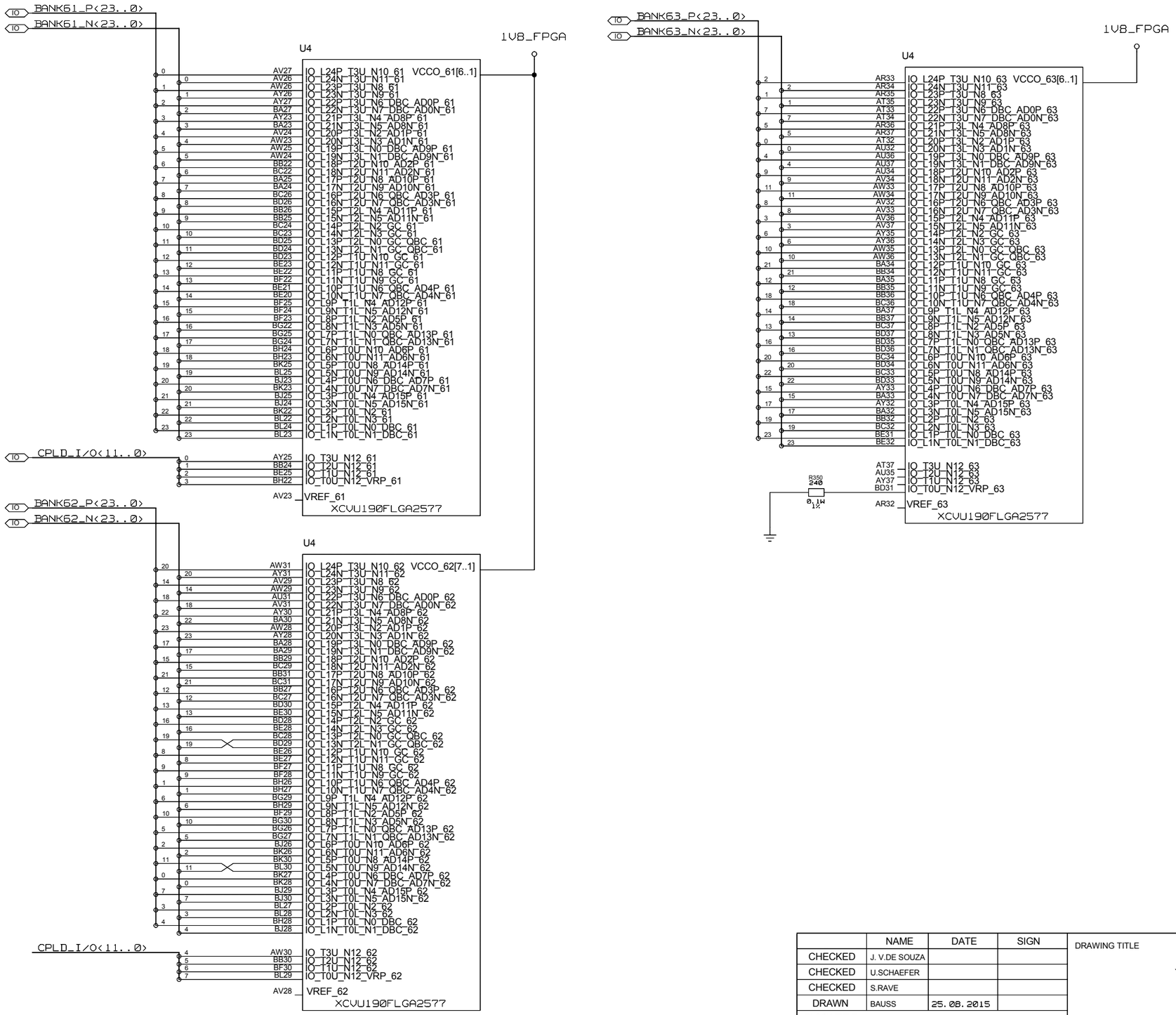

BANK
61
62
63

	NAME	DATE	SIGN
CHECKED	J. V.DE SOUZA		
CHECKED	U.SCHAEFER		
CHECKED	S.RAVE		
DRAWN	BAUSS	25.08.2015	

BLOCK TITLE: U4_PARALLEL_I/O

DRAWING TITLE: JFEX

UNIVERSITY OF MAINZ

SIZE: C | REV. | DRAWING NO.

SCALE | SHEET 1 OF 5

REVISIONS				
ZONE	LTR	DESCRIPTION	DATE	APPR.

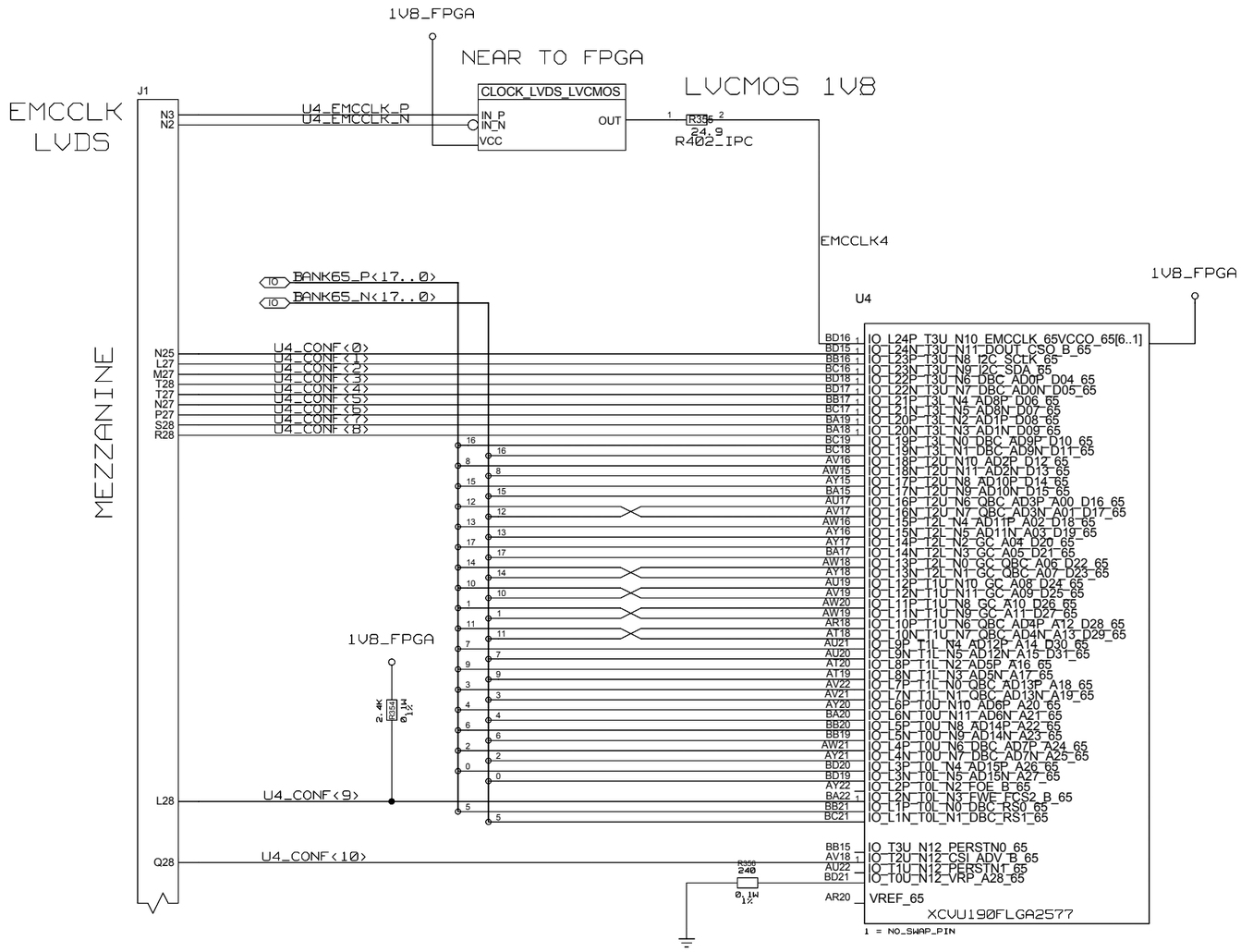

BANK
65

	NAME	DATE	SIGN
CHECKED	J. V.DE SOUZA		
CHECKED	U.SCHAEFER		
CHECKED	S.RAVE		
DRAWN	BAUSS	25.08.2015	

BLOCK TITLE
U4_PARALLEL_I/O

DRAWING TITLE
JFEX

UNIVERSITY OF MAINZ

SIZE C | REV. | DRAWING NO.

SCALE | SHEET 2 OF 5

REVISIONS				
ZONE	LTR	DESCRIPTION	DATE	APPR.

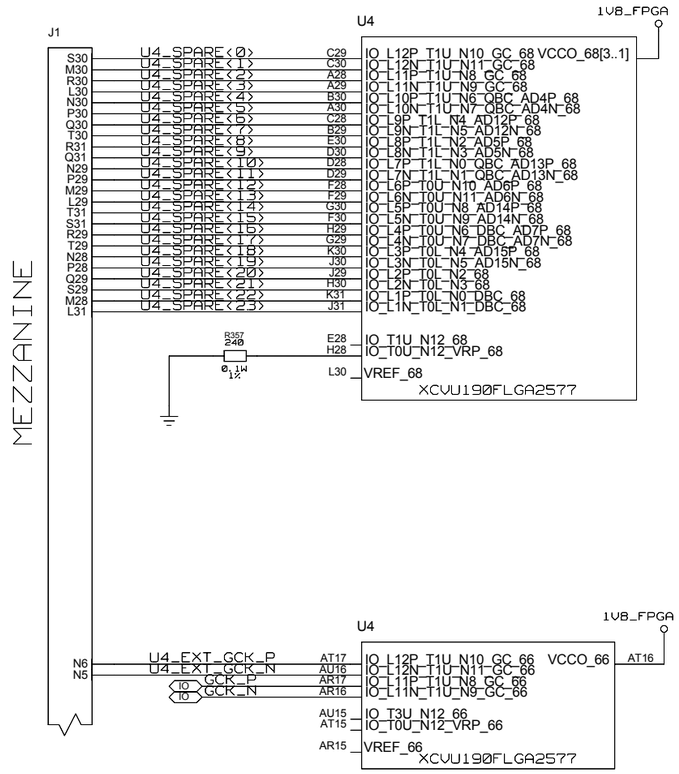

BANK
66
68

	NAME	DATE	SIGN
CHECKED	J. V.DE SOUZA		
CHECKED	U.SCHAEFER		
CHECKED	S.RAVE		
DRAWN	BAUSS	25.08.2015	

BLOCK TITLE
U4_PARALLEL_I/O

DRAWING TITLE
JFEX

UNIVERSITY OF MAINZ

SIZE C | REV. | DRAWING NO.

SCALE | SHEET 3 OF 5

REVISIONS				
ZONE	LTR	DESCRIPTION	DATE	APPR.

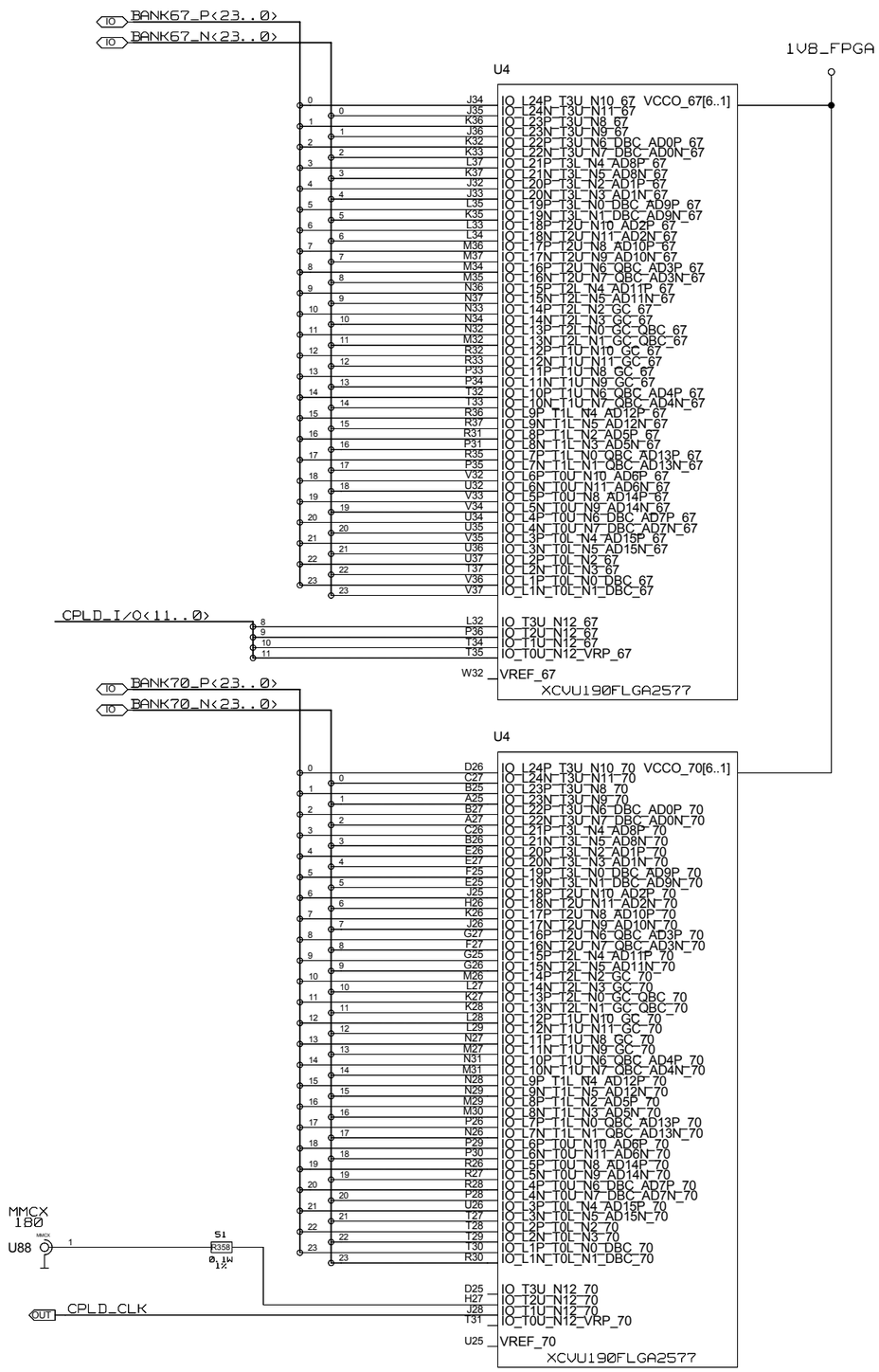

BANK
67
70

	NAME	DATE	SIGN
CHECKED	J. V.DE SOUZA		
CHECKED	U.SCHAEFER		
CHECKED	S.RAVE		
DRAWN	BAUSS	25.08.2015	

BLOCK TITLE
U4_PARALLEL_I/O

DRAWING TITLE
JFEX

UNIVERSITY OF MAINZ

SIZE C | REV. | DRAWING NO.

SCALE

SHEET 4 OF 5

REVISIONS				
ZONE	LTR	DESCRIPTION	DATE	APPR.

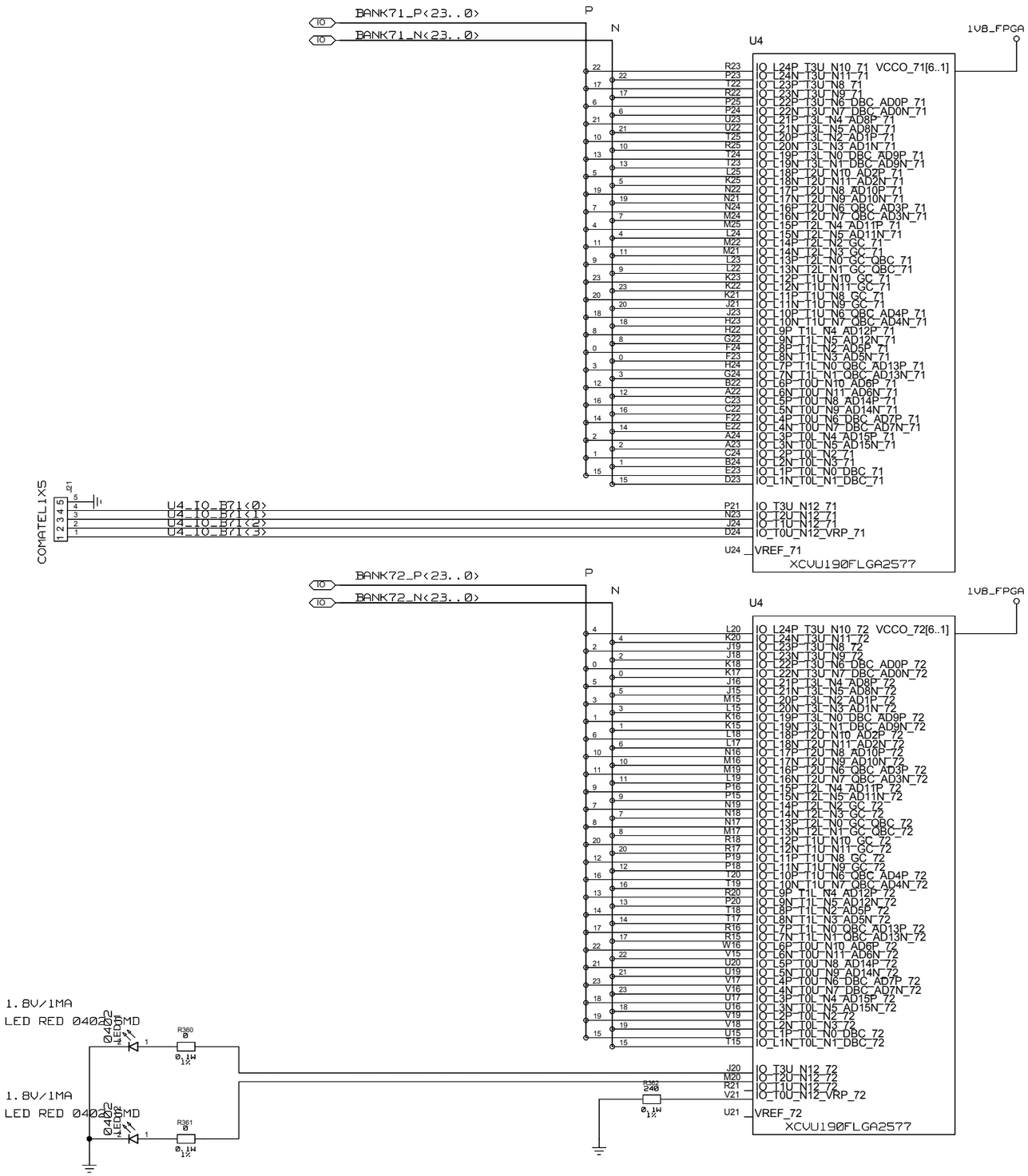

BANK
71
72

	NAME	DATE	SIGN
CHECKED	J. V.DE SOUZA		
CHECKED	U.SCHAEFER		
CHECKED	S.RAVE		
DRAWN	BAUSS	25.08.2015	

BLOCK TITLE
U4_PARALLEL_I/O

DRAWING TITLE
JFEX

UNIVERSITY OF MAINZ

SIZE C | REV. | DRAWING NO.

SCALE | SHEET 5 OF 5

REVISIONS				
ZONE	LTR	DESCRIPTION	DATE	APPR.

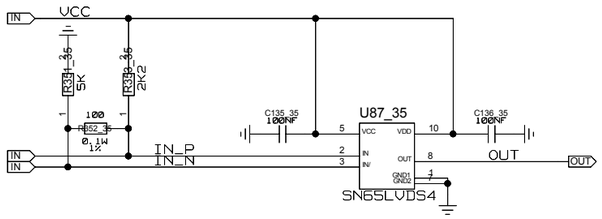

	NAME	DATE	SIGN
CHECKED	J. V.DE SOUZA		
CHECKED	U.SCHAEFER		
CHECKED	S.RAVE		
DRAWN	BAUSS		

BLOCK TITLE
CLOCK_LVDS_LVCMOS

UNIVERSITY OF MAINZ

DRAWING TITLE
JFEX

SIZE C | REV. | DRAWING NO.

SCALE | SHEET OF

REVISIONS				
ZONE	LTR	DESCRIPTION	DATE	APPR.

AC COUPLING

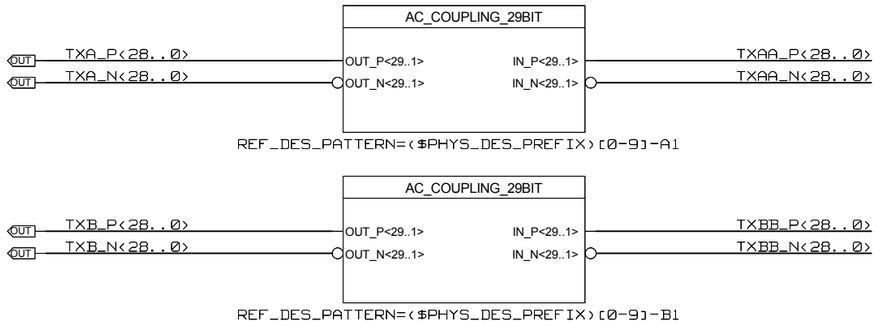

IN CLK_MGT1_P<12..1>
IN CLK_MGT1_N<12..1>
IN CLK_MGT2_P<6..1>
IN CLK_MGT2_N<6..1>

IN CLK_MGT4_P<3..1>
IN CLK_MGT4_N<3..1>

	NAME	DATE	SIGN
CHECKED	J. V.DE SOUZA		
CHECKED	U.SCHAEFER		
CHECKED	S.RAVE		
DRAWN	BAUSS	07.08.2015	

BLOCK TITLE
U1_MGT_REAL_TIME

UNIVERSITY OF MAINZ

DRAWING TITLE
I/O + AC COUPLING

SIZE C | REV. | DRAWING NO.

SCALE | SHEET 1 OF 7

REVISIONS				
ZONE	LTR	DESCRIPTION	DATE	APPR.

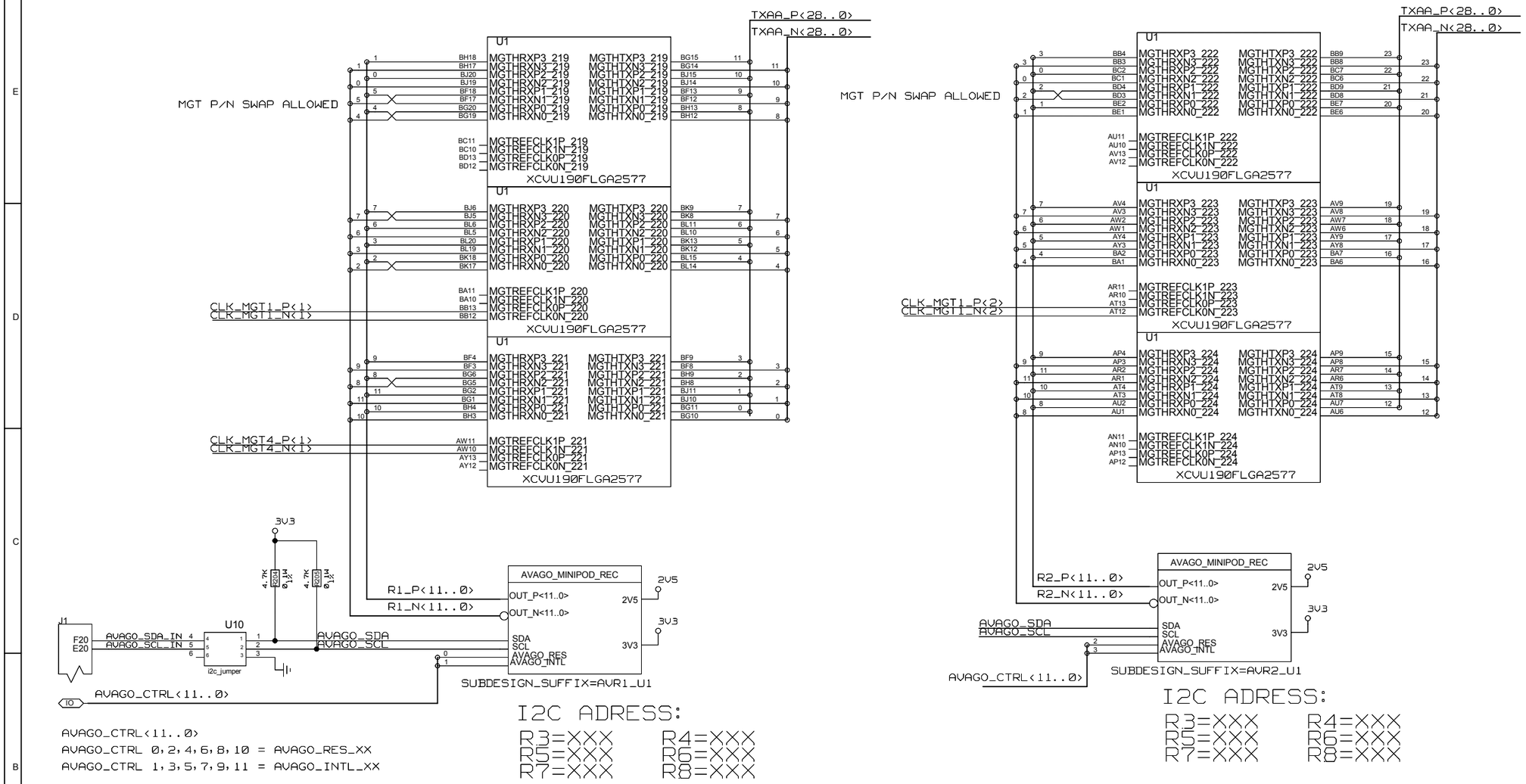

BANK
219
220
221
222
223

	NAME	DATE	SIGN
CHECKED	J. V.DE SOUZA		
CHECKED	U.SCHAEFER		
CHECKED	S.RAVE		
DRAWN	BAUSS	07.08.2015	

BLOCK TITLE
U1_MGT_REAL_TIME

DRAWING TITLE
AVAGO
TXA

UNIVERSITY OF MAINZ

SIZE C | REV. | DRAWING NO.

SCALE | SHEET 2 OF 7

REVISIONS				
ZONE	LTR	DESCRIPTION	DATE	APPR.

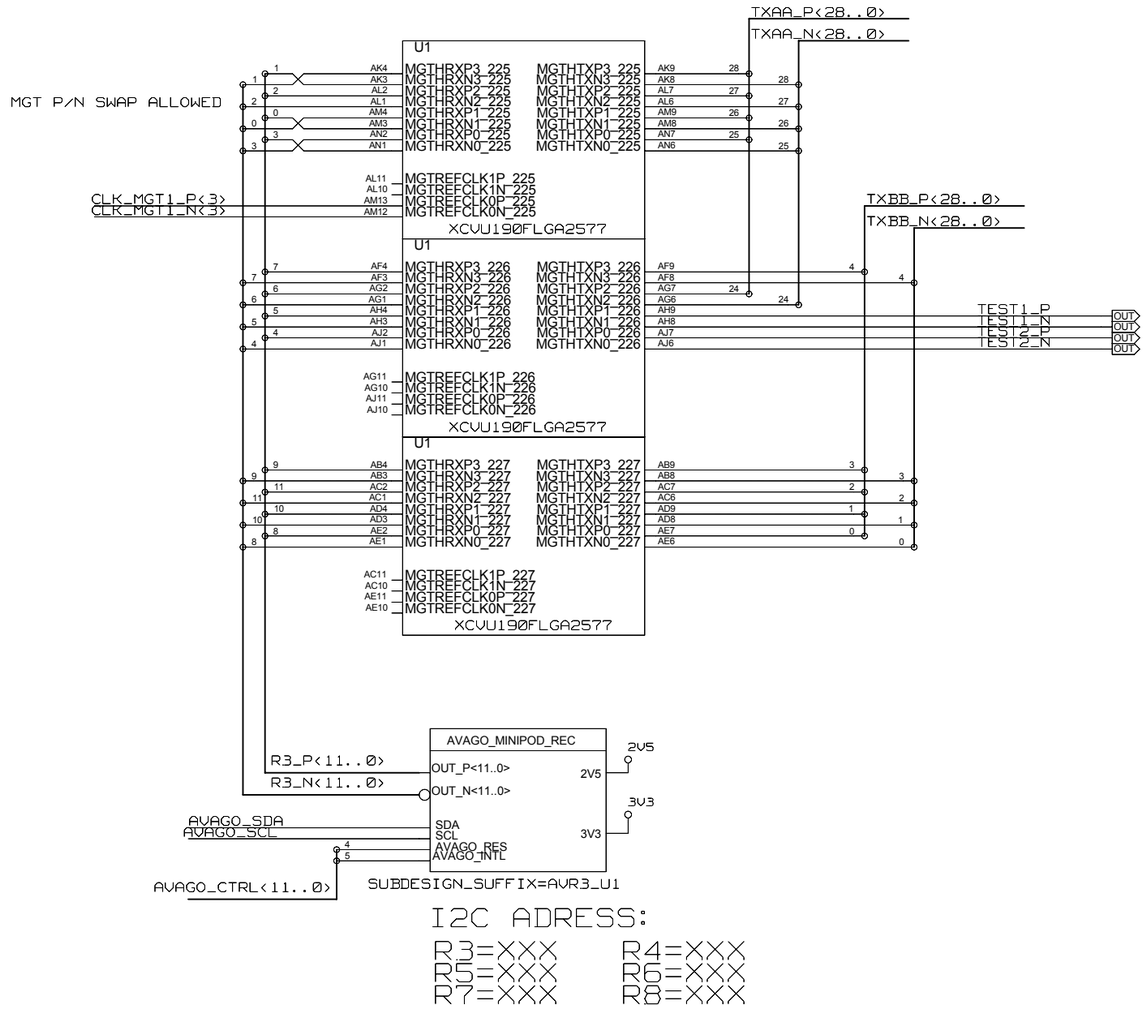

I2C ADRESS:

R3=XXX R4=XXX
R5=XXX R6=XXX
R7=XXX R8=XXX

BANK
225
226
227

	NAME	DATE	SIGN
CHECKED	J. V.DE SOUZA		
CHECKED	U.SCHAEFER		
CHECKED	S.RAVE		
DRAWN	BAUSS	07.08.2015	

BLOCK TITLE
U1_MGT_REAL_TIME

DRAWING TITLE
AVAGO
TXA + TXB

UNIVERSITY OF MAINZ

SIZE C | REV. | DRAWING NO.

SCALE | SHEET 3 OF 7

REVISIONS				
ZONE	LTR	DESCRIPTION	DATE	APPR.

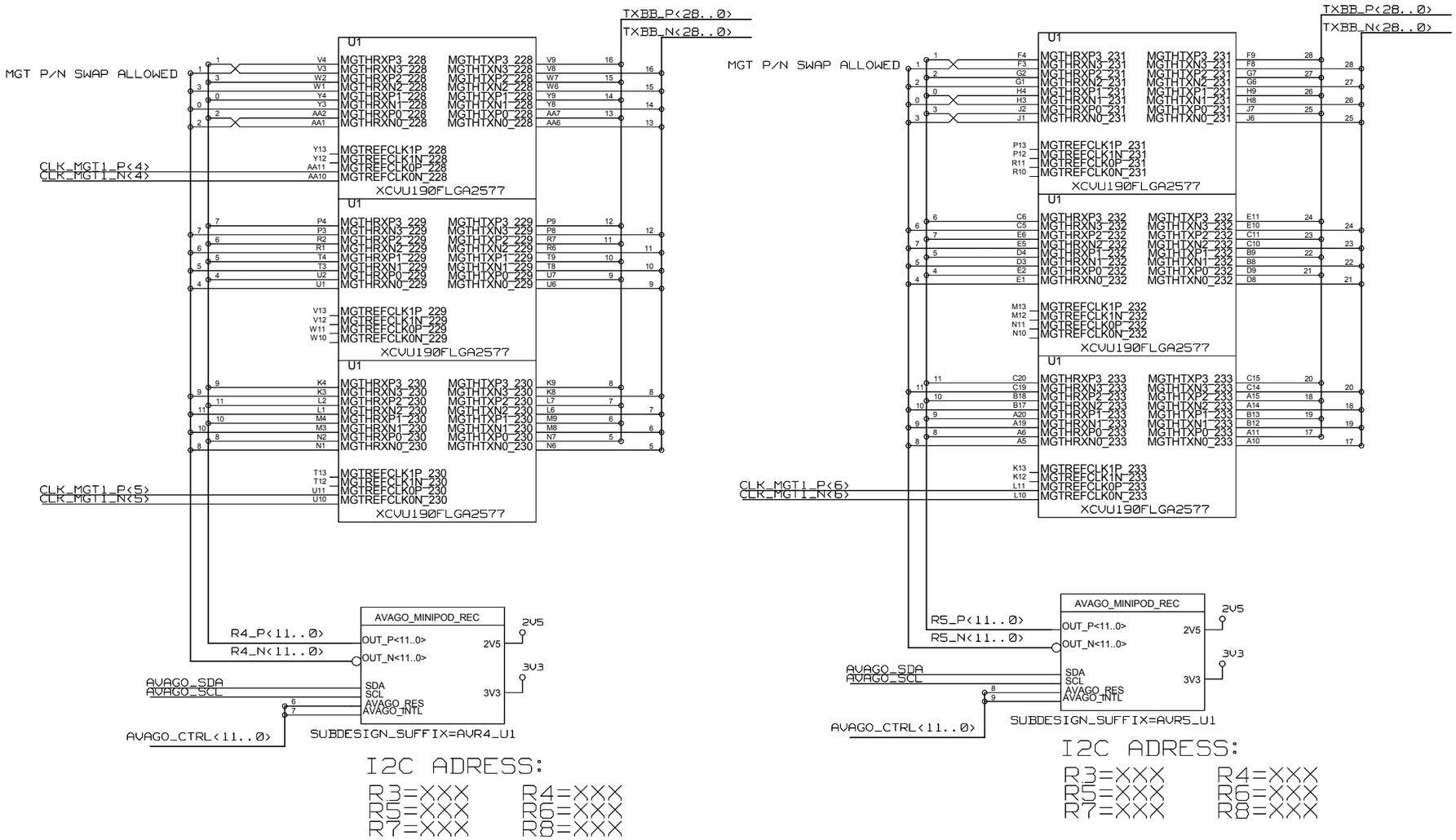

BANK
228
229
230
231
232
233

	NAME	DATE	SIGN
CHECKED	J. V.DE SOUZA		
CHECKED	U.SCHAEFER		
CHECKED	S.RAVE		
DRAWN	BAUSS	07.08.2015	

BLOCK TITLE
U1_MGT_REAL_TIME

DRAWING TITLE
AVAGO
TXB

UNIVERSITY OF MAINZ

SIZE C | REV. | DRAWING NO.

SCALE | SHEET 4 OF 7

REVISIONS				
ZONE	LTR	DESCRIPTION	DATE	APPR.

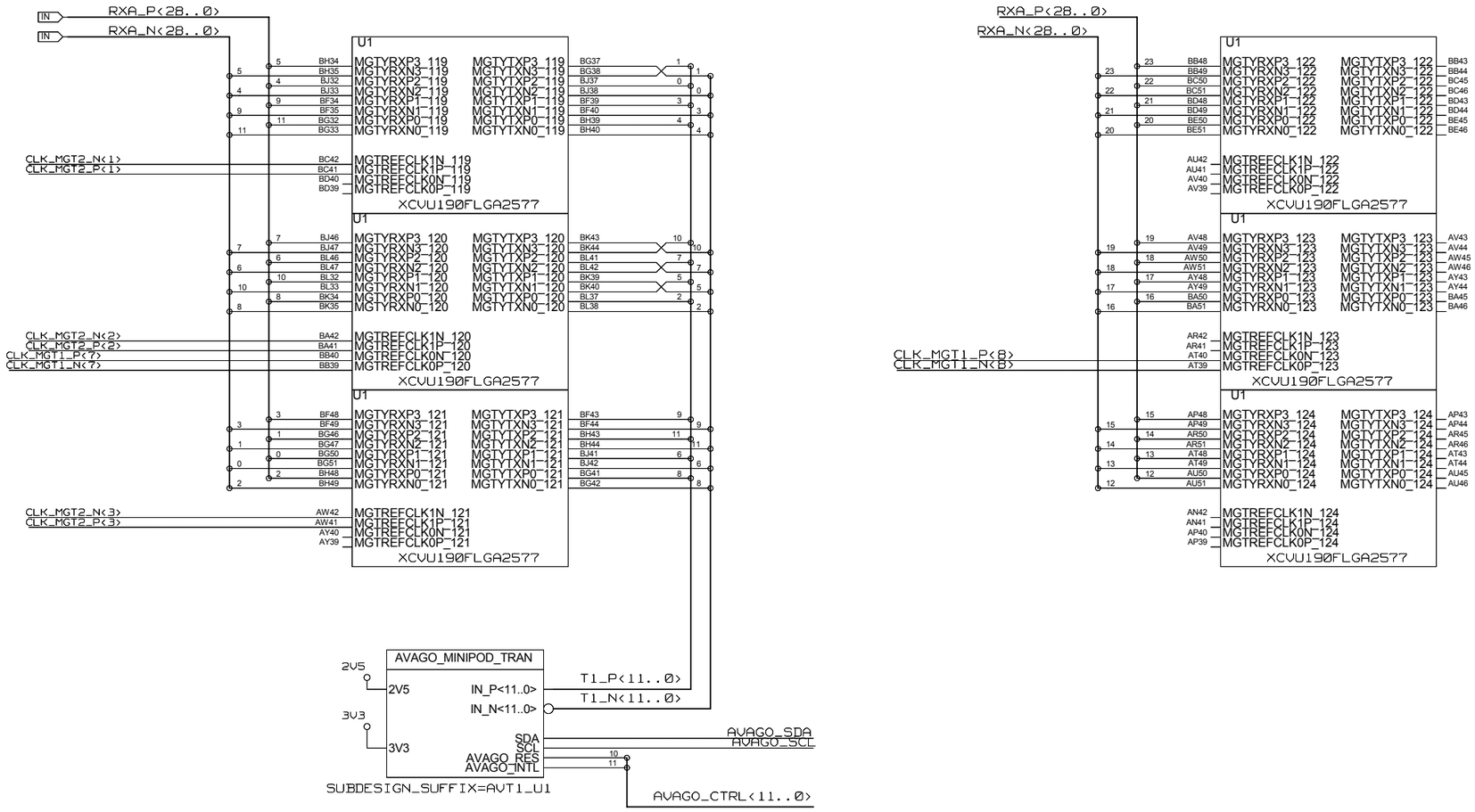

I2C ADRESS:

R3=XXX R4=XXX
R5=XXX R6=XXX
R7=XXX R8=XXX

BANK
119
120
121
122
123
124

	NAME	DATE	SIGN
CHECKED	J. V.DE SOUZA		
CHECKED	U.SCHAEFER		
CHECKED	S.RAVE		
DRAWN	BAUSS	07.08.2015	

BLOCK TITLE
U1_MGT_REAL_TIME

DRAWING TITLE
AVAGO
RXA

UNIVERSITY OF MAINZ

SIZE C | REV. | DRAWING NO.

SCALE | SHEET 5 OF 7

REVISIONS				
ZONE	LTR	DESCRIPTION	DATE	APPR.

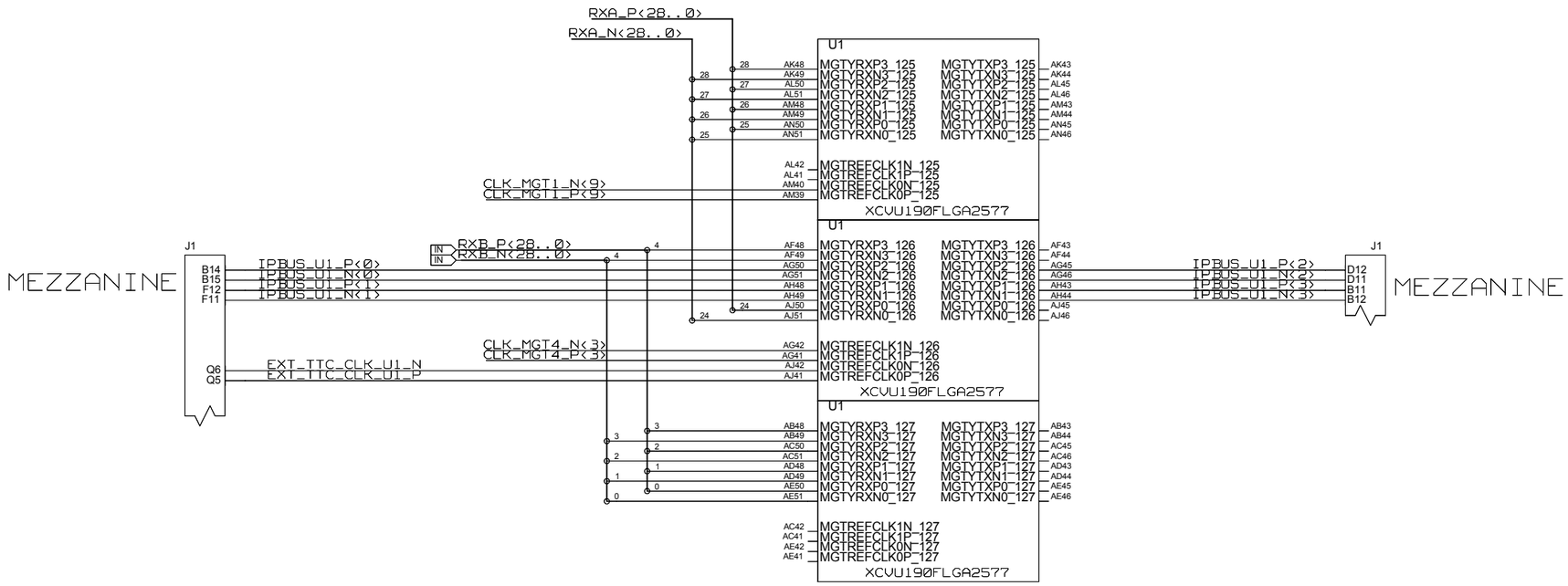

BANK
125
126
127

	NAME	DATE	SIGN
CHECKED	J. V.DE SOUZA		
CHECKED	U.SCHAEFER		
CHECKED	S.RAVE		
DRAWN	BAUSS	07.08.2015	

BLOCK TITLE
U1_MGT_REAL_TIME

DRAWING TITLE
RXA + RXB
TXD + IPBUS

UNIVERSITY OF MAINZ

SIZE C | REV. | DRAWING NO.

SCALE | SHEET 6 OF 7

REVISIONS				
ZONE	LTR	DESCRIPTION	DATE	APPR.

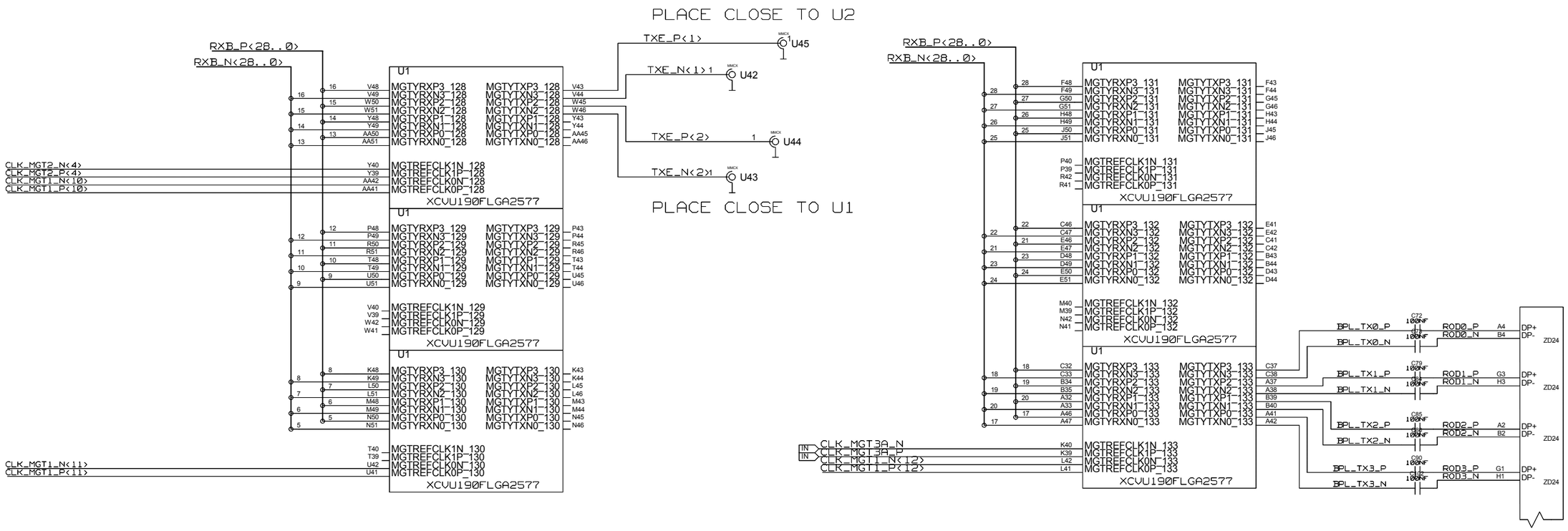

BANK
128
129
130
131
132
133

	NAME	DATE	SIGN
CHECKED	J. V.DE SOUZA		
CHECKED	U.SCHAEFER		
CHECKED	S.RAVE		
DRAWN	BAUSS	07.08.2015	

BLOCK TITLE
U1_MGT_REAL_TIME

DRAWING TITLE
RXB + TXC

UNIVERSITY OF MAINZ

SIZE C | REV. | DRAWING NO.

SCALE | SHEET 7 OF 7

REVISIONS				
ZONE	LTR	DESCRIPTION	DATE	APPR.

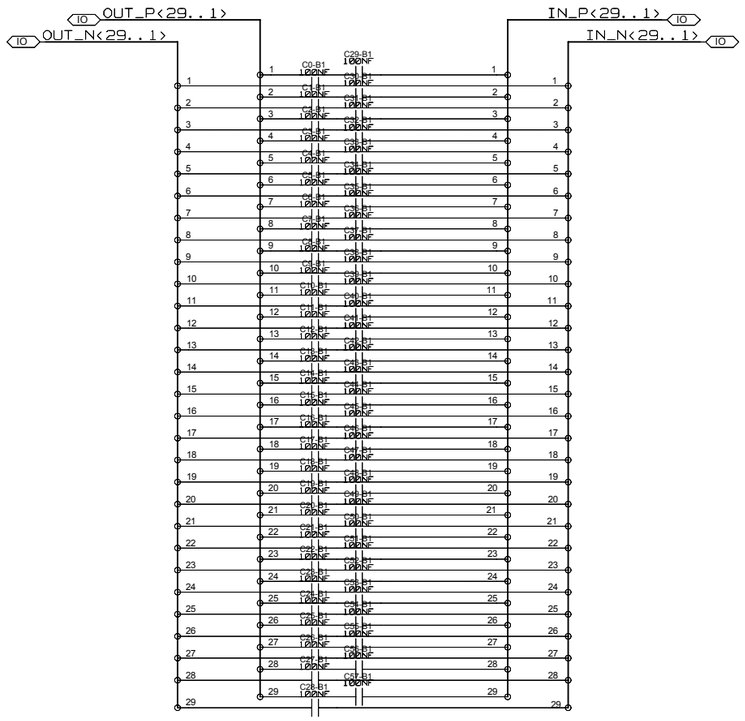

	NAME	DATE	SIGN
CHECKED	J. V.DE SOUZA		
CHECKED	U.SCHAEFER		
CHECKED	S.RAVE		
DRAWN	BAUSS		
BLOCK TITLE			

DRAWING TITLE

AC COUPLING 29BIT

UNIVERSITY OF MAINZ

SIZE C | REV. | DRAWING NO.

SCALE | SHEET OF

REVISIONS				
ZONE	LTR	DESCRIPTION	DATE	APPR.

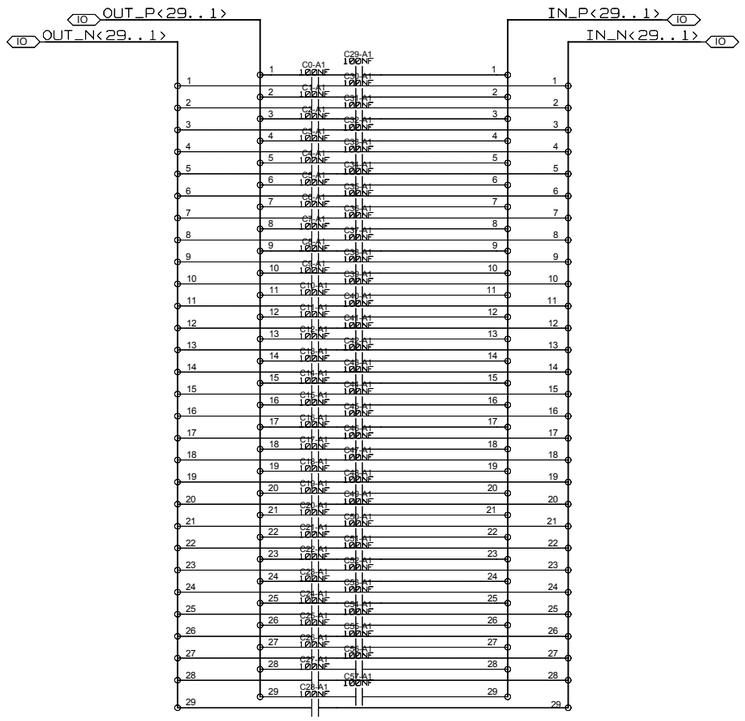

	NAME	DATE	SIGN
CHECKED	J. V.DE SOUZA		
CHECKED	U.SCHAEFER		
CHECKED	S.RAVE		
DRAWN	BAUSS		
BLOCK TITLE			

DRAWING TITLE

AC COUPLING 29BIT

UNIVERSITY OF MAINZ

SIZE C | REV. | DRAWING NO.

SCALE | SHEET OF

REVISIONS				
ZONE	LTR	DESCRIPTION	DATE	APPR.

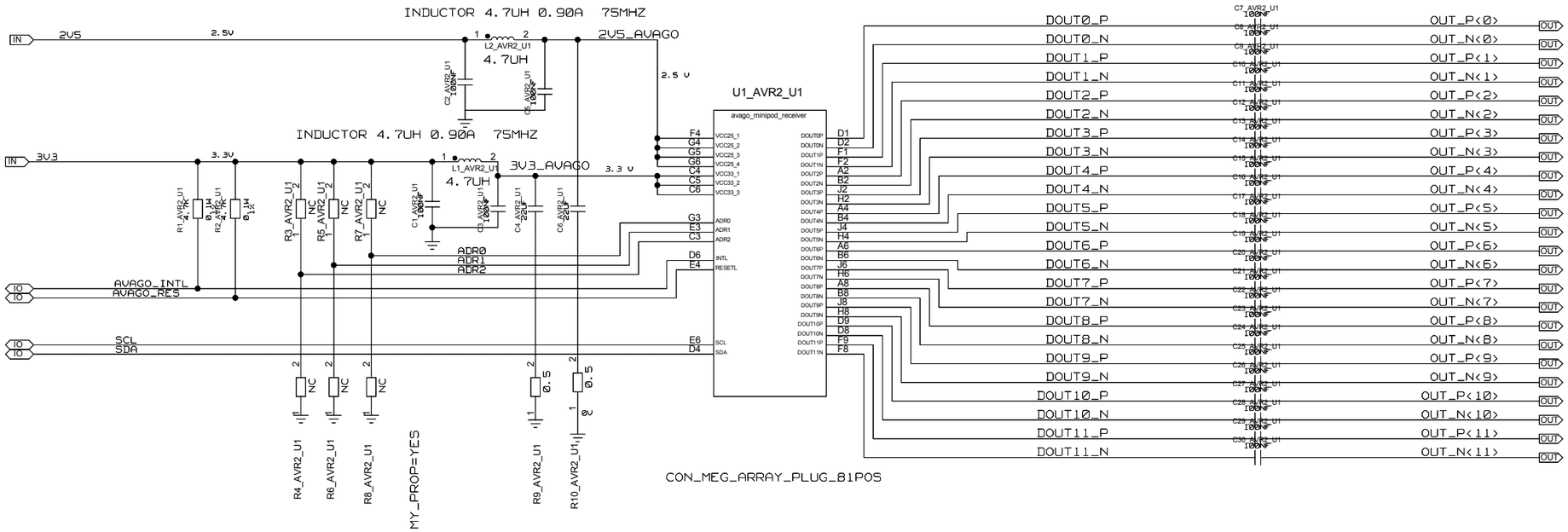

UNIVERSITY OF MAINZ	DRAWING TITLE: AVAGO RECEIVER		
	SIZE: C	REV.	DRAWING NO.
	SCALE		SHEET OF

REVISIONS				
ZONE	LTR	DESCRIPTION	DATE	APPR.

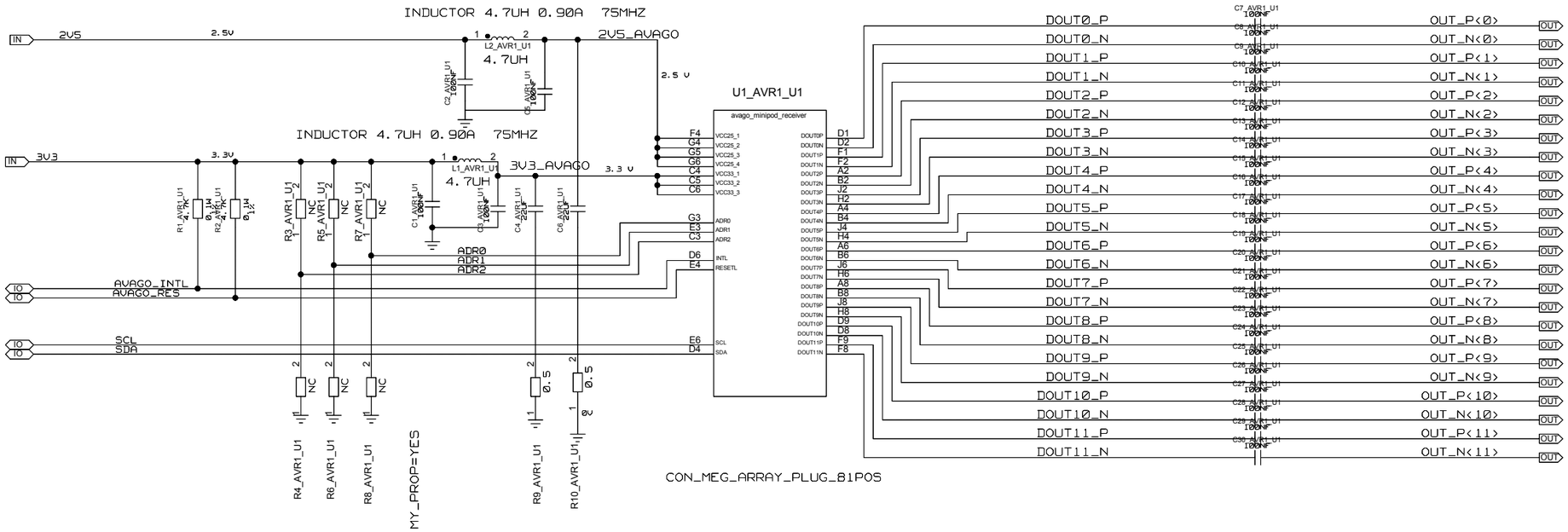

UNIVERSITY OF MAINZ	DRAWING TITLE: AVAGO RECEIVER		
	SIZE: C	REV.	DRAWING NO.
	SCALE		SHEET OF

REVISIONS				
ZONE	LTR	DESCRIPTION	DATE	APPR.

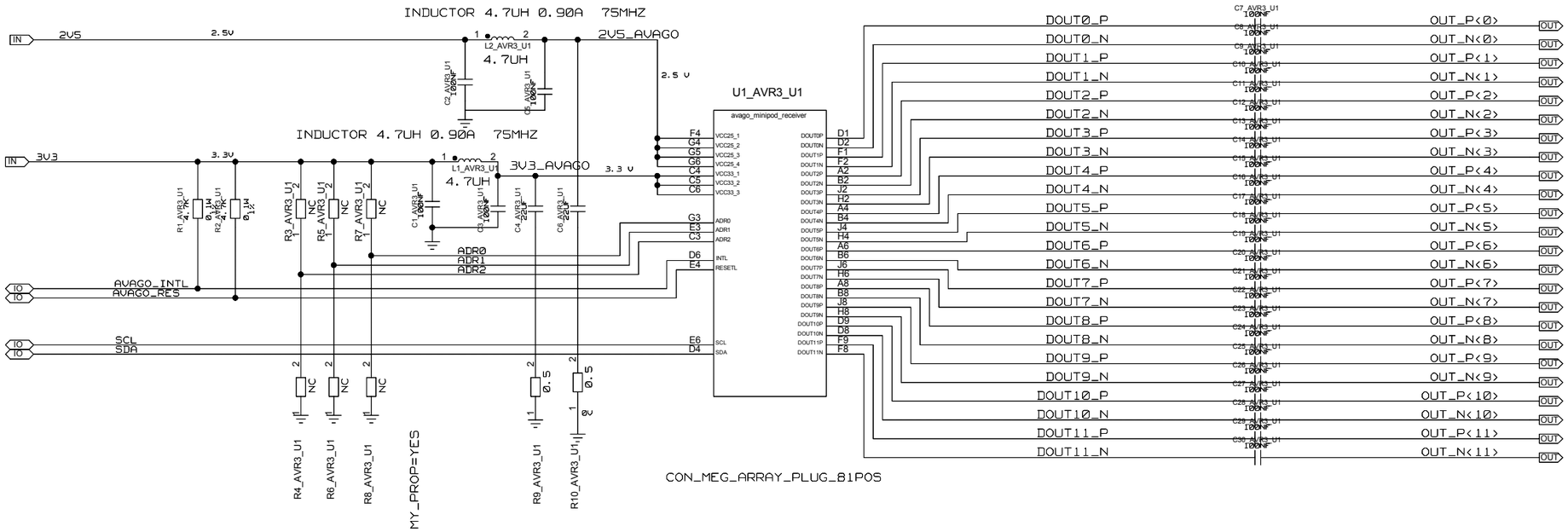

UNIVERSITY OF MAINZ	DRAWING TITLE: AVAGO RECEIVER		
	SIZE: C	REV.	DRAWING NO.
	SCALE		SHEET OF

REVISIONS				
ZONE	LTR	DESCRIPTION	DATE	APPR.

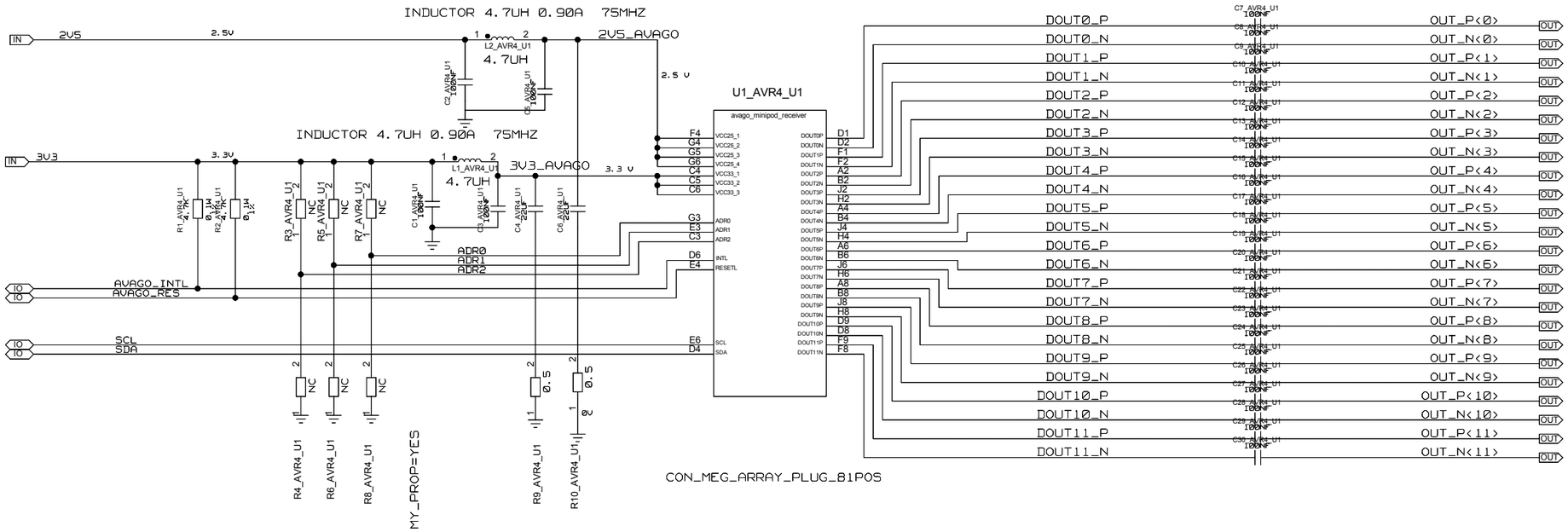

UNIVERSITY OF MAINZ	DRAWING TITLE: AVAGO RECEIVER		
	SIZE: C	REV.	DRAWING NO.
	SCALE		SHEET OF

REVISIONS				
ZONE	LTR	DESCRIPTION	DATE	APPR.

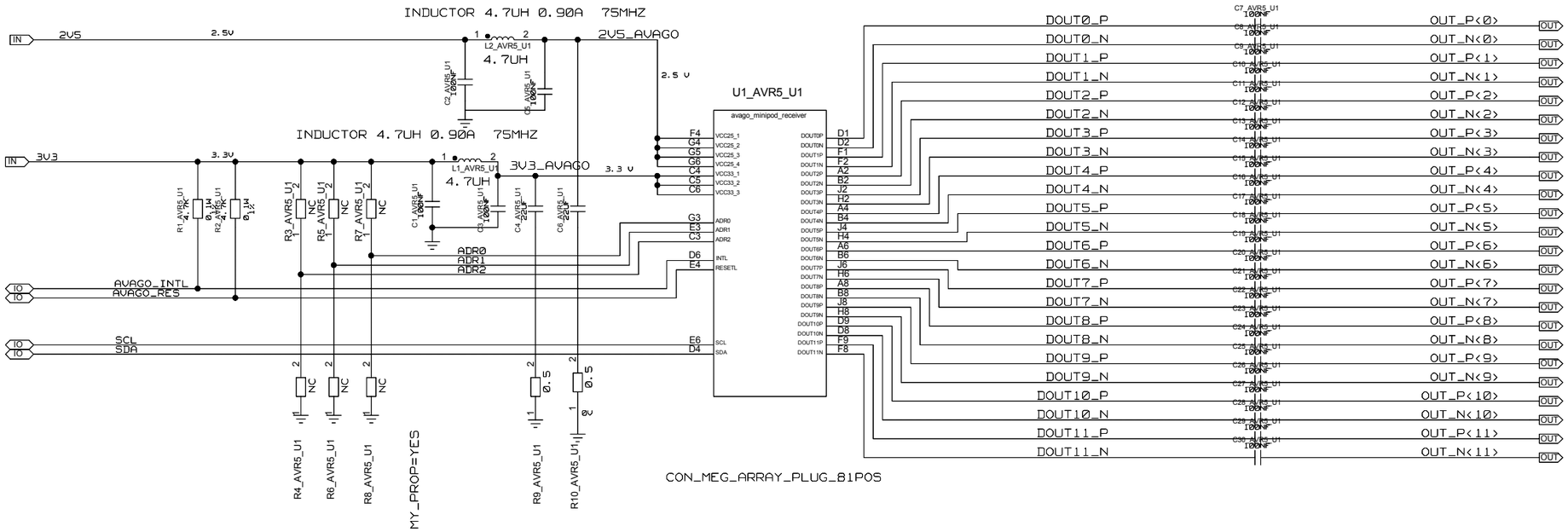

UNIVERSITY OF MAINZ	DRAWING TITLE: AVAGO RECEIVER		
	SIZE: C	REV.	DRAWING NO.
	SCALE		SHEET OF

REVISIONS				
ZONE	LTR	DESCRIPTION	DATE	APPR.

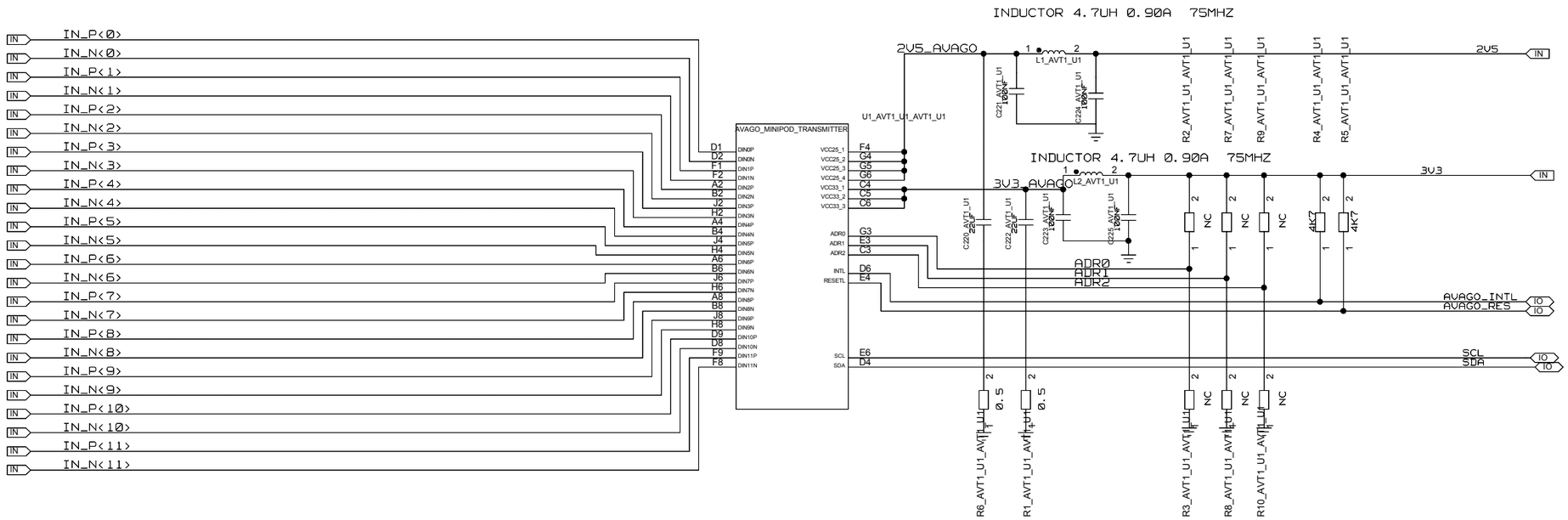

UNIVERSITY OF MAINZ	DRAWING TITLE: AVAGO TRANSMITTER		
	SIZE: C	REV.	DRAWING NO.
	SCALE		SHEET OF

REVISIONS				
ZONE	LTR	DESCRIPTION	DATE	APPR.

AC COUPLING

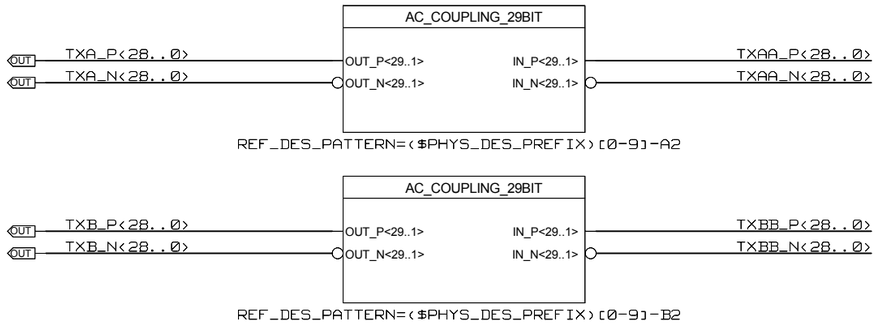

IN CLK_MGT1_P<12..1>
IN CLK_MGT1_N<12..1>
IN CLK_MGT2_P<6..1>
IN CLK_MGT2_N<6..1>

IN CLK_MGT4_P
IN CLK_MGT4_N

	NAME	DATE	SIGN
CHECKED	J. V.DE SOUZA		
CHECKED	U.SCHAEFER		
CHECKED	S.RAVE		
DRAWN	BAUSS	07.08.2015	

BLOCK TITLE
U1_MGT_REAL_TIME

UNIVERSITY OF MAINZ

DRAWING TITLE
I/O + AC COUPLING

SIZE C | REV. | DRAWING NO.

SCALE | SHEET 1 OF 7

REVISIONS				
ZONE	LTR	DESCRIPTION	DATE	APPR.

AC COUPLING

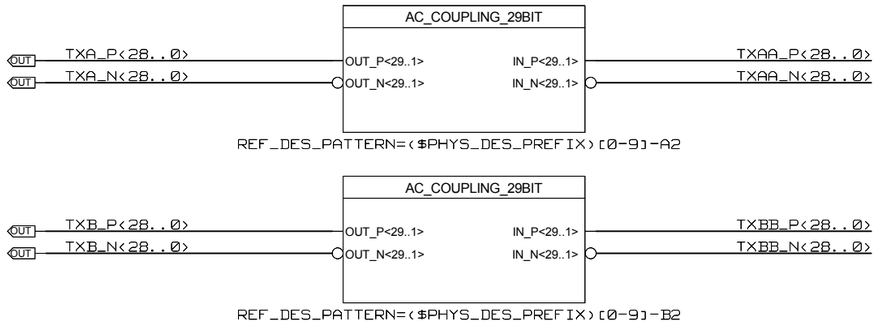

IN CLK_MGT1_P<12..1>
IN CLK_MGT1_N<12..1>

IN CLK_MGT2_P<6..1>
IN CLK_MGT2_N<6..1>

IN CLK_MGT4_P
IN CLK_MGT4_N

	NAME	DATE	SIGN
CHECKED	J. V.DE SOUZA		
CHECKED	U.SCHAEFER		
CHECKED	S.RAVE		
DRAWN	BAUSS	07.08.2015	

BLOCK TITLE
U1_MGT_REAL_TIME

UNIVERSITY OF MAINZ

DRAWING TITLE
I/O + AC COUPLING

SIZE C | REV. | DRAWING NO.

SCALE | SHEET 1 OF 7

REVISIONS				
ZONE	LTR	DESCRIPTION	DATE	APPR.

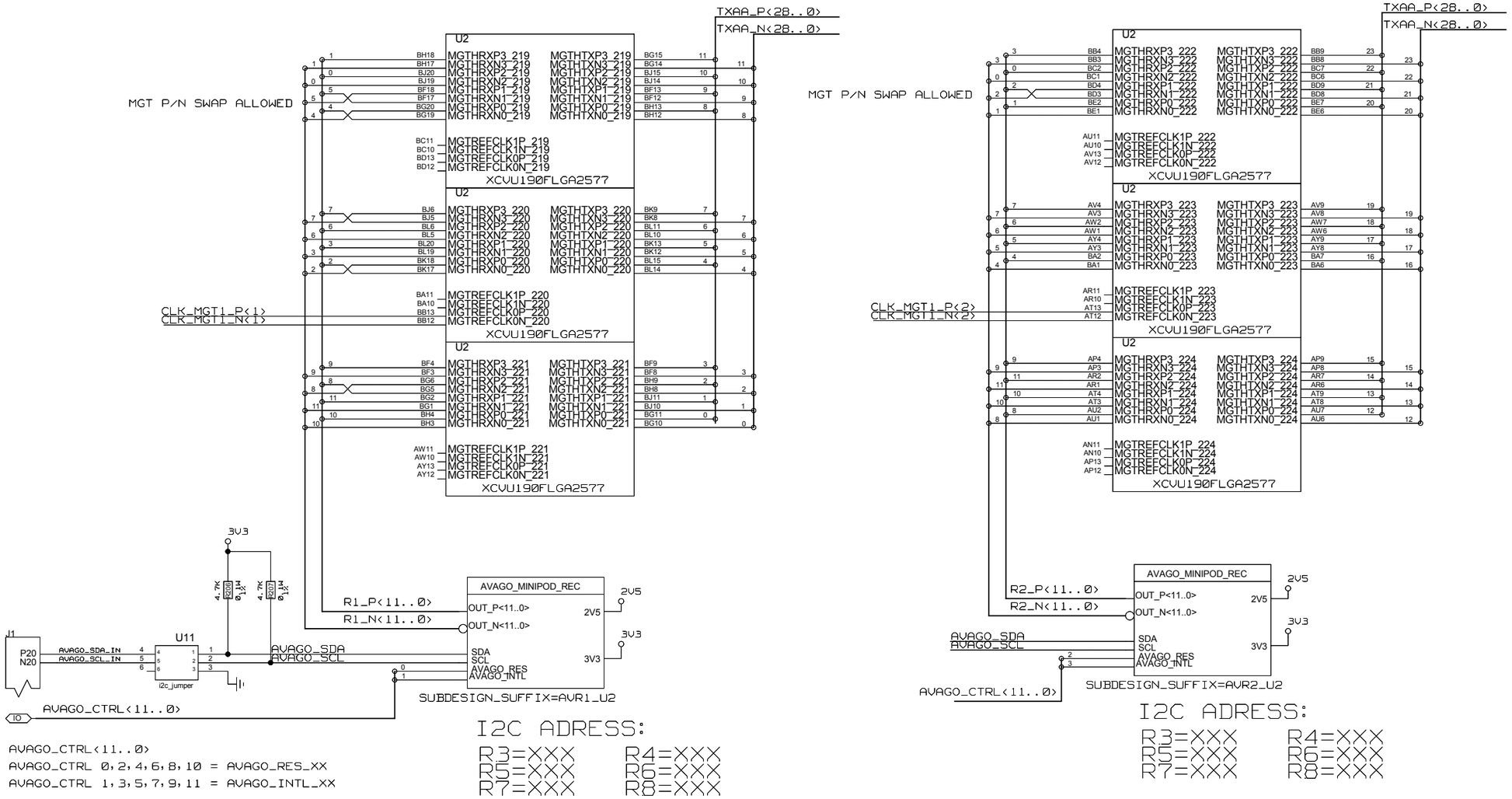

AVAGO_CTRL<11..0>
AVAGO_CTRL 0,2,4,6,8,10 = AVAGO_RES_XX
AVAGO_CTRL 1,3,5,7,9,11 = AVAGO_INTL_XX

I2C ADRESS:
R3=XXX R4=XXX
R5=XXX R6=XXX
R7=XXX R8=XXX

I2C ADRESS:
R3=XXX R4=XXX
R5=XXX R6=XXX
R7=XXX R8=XXX

BANK
219
220
221
222
223

	NAME	DATE	SIGN
CHECKED	J. V.DE SOUZA		
CHECKED	U.SCHAEFER		
CHECKED	S.RAVE		
DRAWN	BAUSS	07.08.2015	

BLOCK TITLE
U2_MGT_REAL_TIME

DRAWING TITLE
AVAGO
TXA

UNIVERSITY OF MAINZ

SIZE C | REV. | DRAWING NO.

SCALE | SHEET 2 OF 7

REVISIONS				
ZONE	LTR	DESCRIPTION	DATE	APPR.

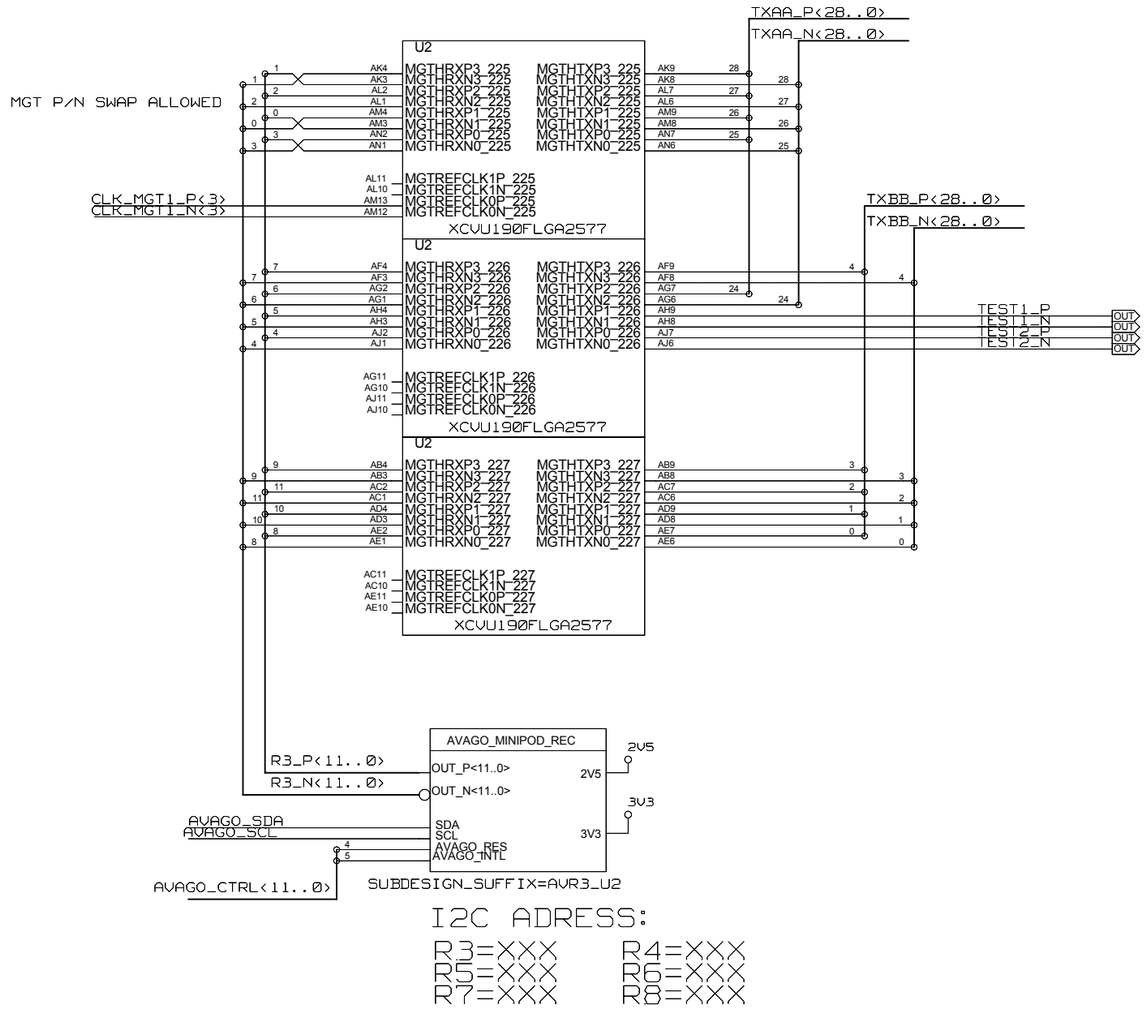

I2C ADRESS:

R3=XXX R4=XXX
R5=XXX R6=XXX
R7=XXX R8=XXX

BANK
225
226
227

	NAME	DATE	SIGN
CHECKED	J. V.DE SOUZA		
CHECKED	U.SCHAEFER		
CHECKED	S.RAVE		
DRAWN	BAUSS	07.08.2015	

BLOCK TITLE
U3_MGT_REAL_TIME

DRAWING TITLE
AVAGO
TXA + TXB

UNIVERSITY OF MAINZ

SIZE C | REV. | DRAWING NO.

SCALE | SHEET 3 OF 7

REVISIONS				
ZONE	LTR	DESCRIPTION	DATE	APPR.

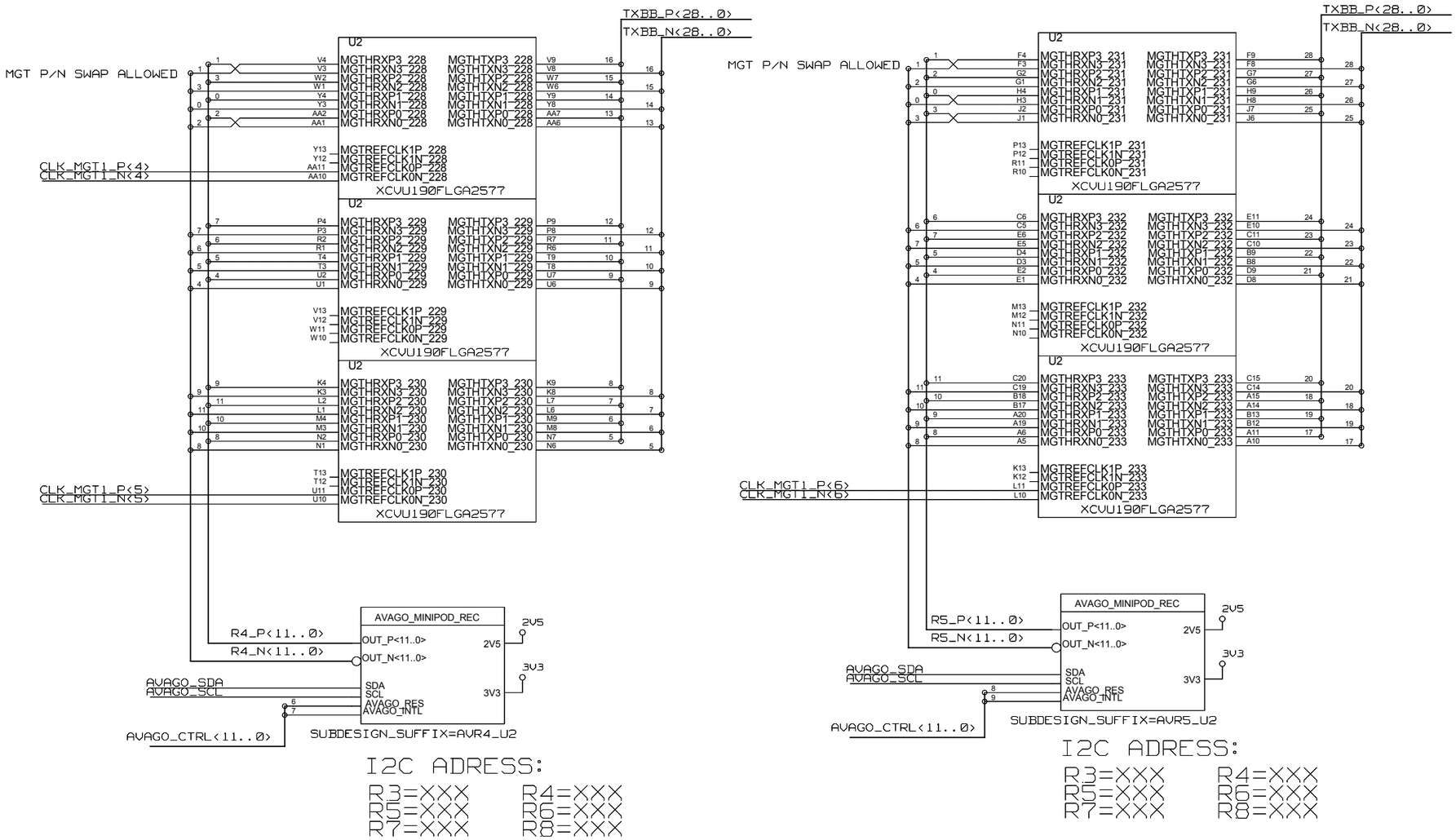

BANK
228
229
230
231
232
233

	NAME	DATE	SIGN
CHECKED	J. V.DE SOUZA		
CHECKED	U.SCHAEFER		
CHECKED	S.RAVE		
DRAWN	BAUSS	07.08.2015	

BLOCK TITLE: U2_MGT_REAL_TIME

DRAWING TITLE: AVAGO TXB

UNIVERSITY OF MAINZ

SIZE: C | REV. | DRAWING NO.

SCALE | SHEET 4 OF 7

REVISIONS				
ZONE	LTR	DESCRIPTION	DATE	APPR.

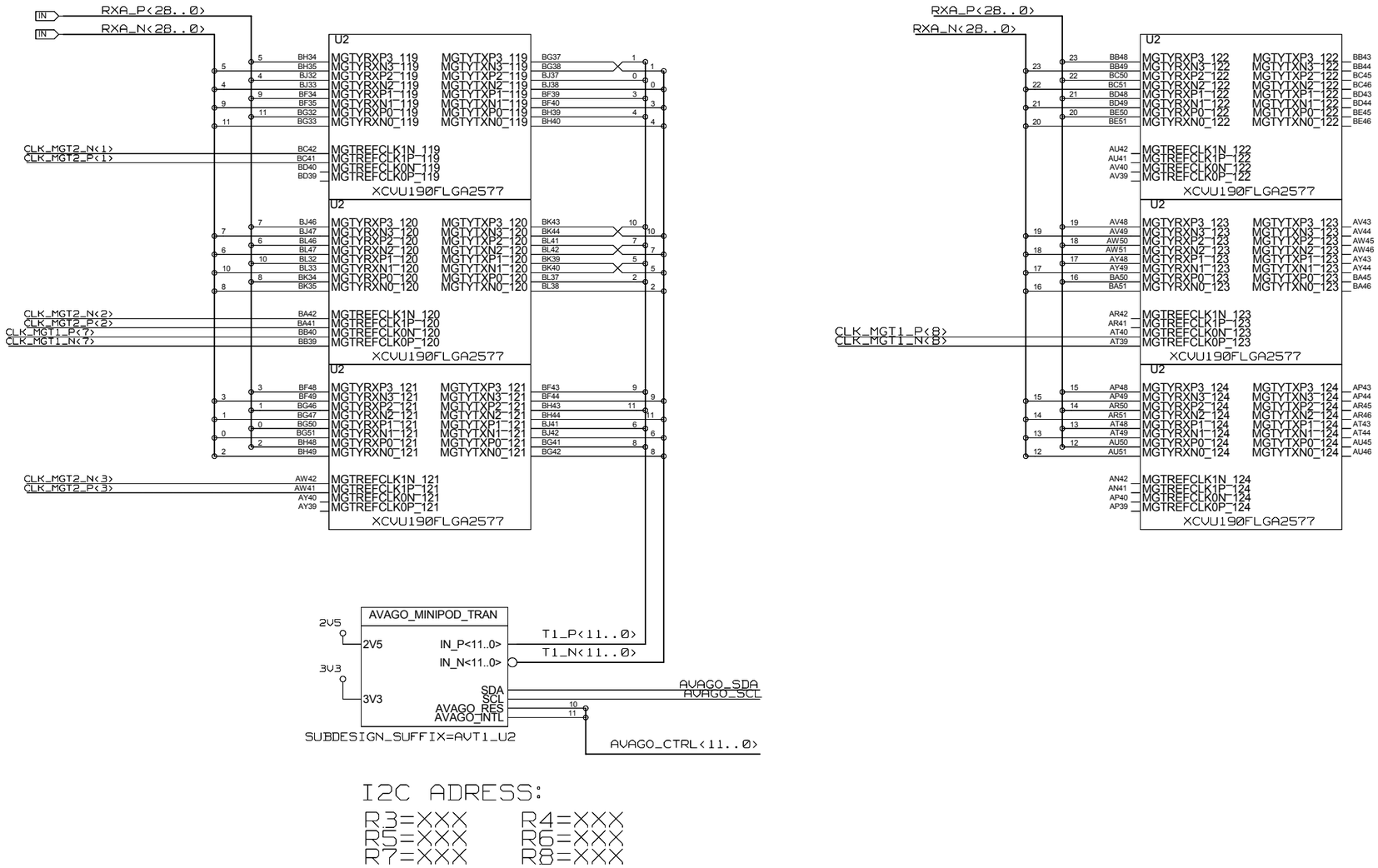

I2C ADRESS:

R3=XXX R4=XXX
R5=XXX R6=XXX
R7=XXX R8=XXX

BANK
119
120
121
122
123
124

	NAME	DATE	SIGN
CHECKED	J. V.DE SOUZA		
CHECKED	U.SCHAEFER		
CHECKED	S.RAVE		
DRAWN	BAUSS	07.08.2015	

BLOCK TITLE
U2_MGT_REAL_TIME

DRAWING TITLE
AVAGO
RXA

UNIVERSITY OF MAINZ

SIZE C | REV. | DRAWING NO.

SCALE | SHEET 5 OF 7

REVISIONS				
ZONE	LTR	DESCRIPTION	DATE	APPR.

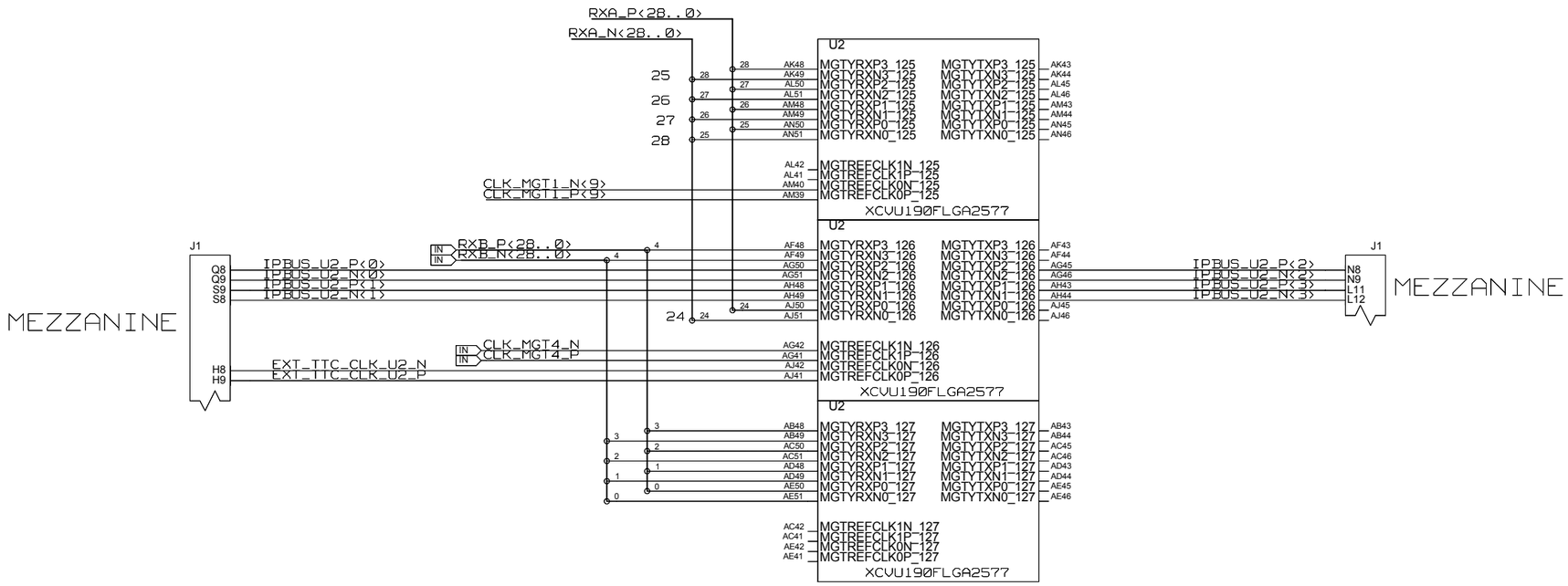

BANK
125
126
127

	NAME	DATE	SIGN
CHECKED	J. V.DE SOUZA		
CHECKED	U.SCHAEFER		
CHECKED	S.RAVE		
DRAWN	BAUSS	07.08.2015	

BLOCK TITLE
U2_MGT_REAL_TIME

DRAWING TITLE
RXA + RXB
TXD + IPBUS

UNIVERSITY OF MAINZ

SIZE C | REV. | DRAWING NO.

SCALE | SHEET 6 OF 7

REVISIONS				
ZONE	LTR	DESCRIPTION	DATE	APPR.

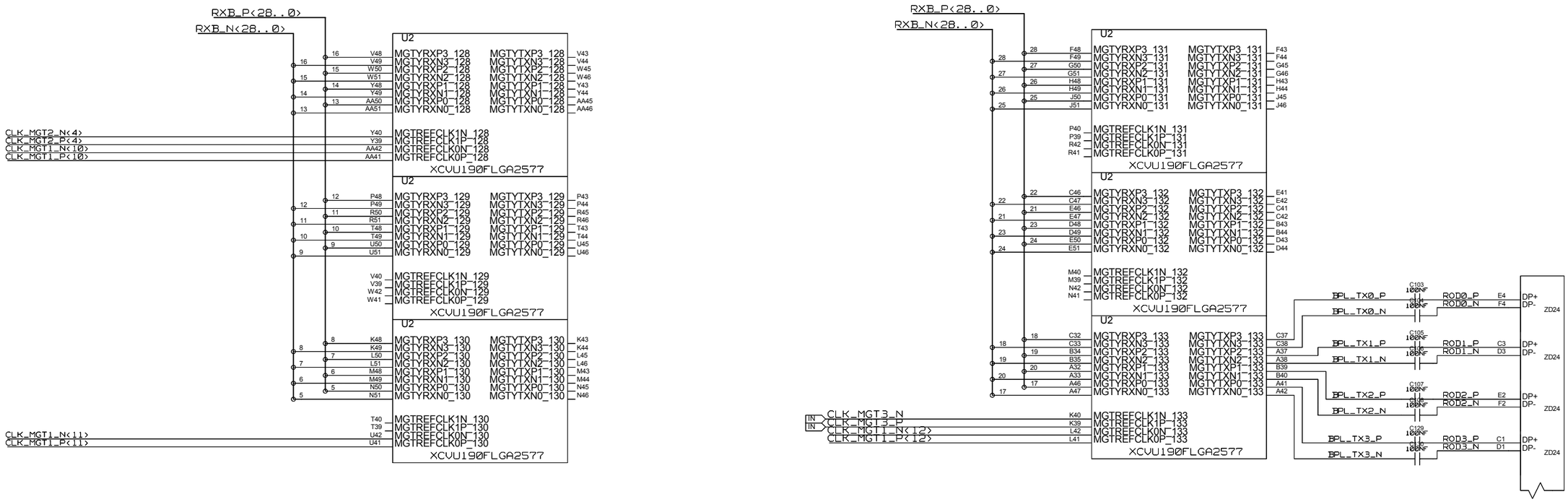

BANK
128
129
130
131
132
133

	NAME	DATE	SIGN
CHECKED	J. V.DE SOUZA		
CHECKED	U.SCHAEFER		
CHECKED	S.RAVE		
DRAWN	BAUSS	07.08.2015	

BLOCK TITLE
U2_MGT_REAL_TIME

DRAWING TITLE
RXB + TXC

UNIVERSITY OF MAINZ

SIZE C | REV. | DRAWING NO.

SCALE | SHEET 7 OF 7

REVISIONS				
ZONE	LTR	DESCRIPTION	DATE	APPR.

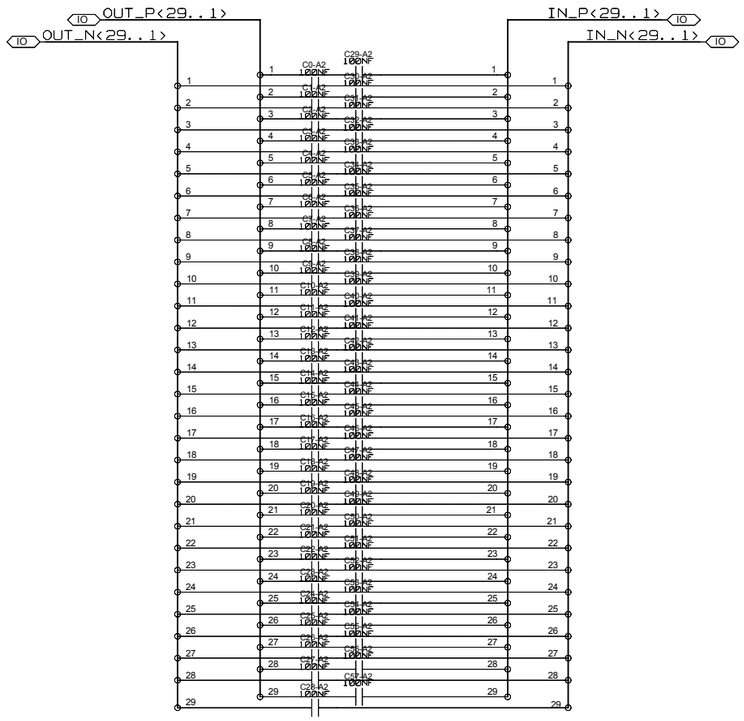

	NAME	DATE	SIGN
CHECKED	J. V.DE SOUZA		
CHECKED	U.SCHAEFER		
CHECKED	S.RAVE		
DRAWN	BAUSS		
BLOCK TITLE			

DRAWING TITLE

AC COUPLING 29BIT

UNIVERSITY OF MAINZ

SIZE C | REV. | DRAWING NO.

SCALE | SHEET OF

REVISIONS				
ZONE	LTR	DESCRIPTION	DATE	APPR.

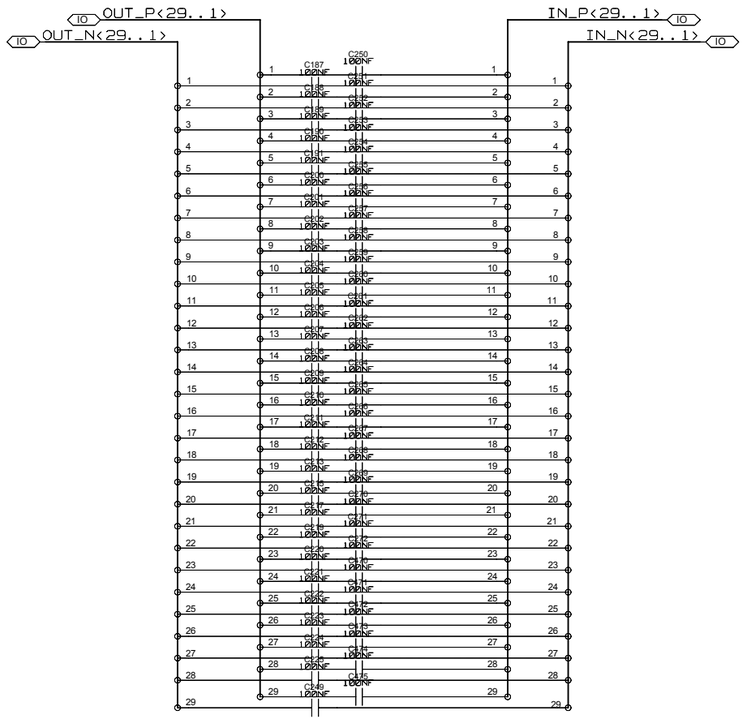

	NAME	DATE	SIGN
CHECKED	J. V.DE SOUZA		
CHECKED	U.SCHAEFER		
CHECKED	S.RAVE		
DRAWN	BAUSS		
BLOCK TITLE			

DRAWING TITLE

AC COUPLING 29BIT

UNIVERSITY OF MAINZ

SIZE C | REV. | DRAWING NO.

SCALE | SHEET OF

REVISIONS				
ZONE	LTR	DESCRIPTION	DATE	APPR.

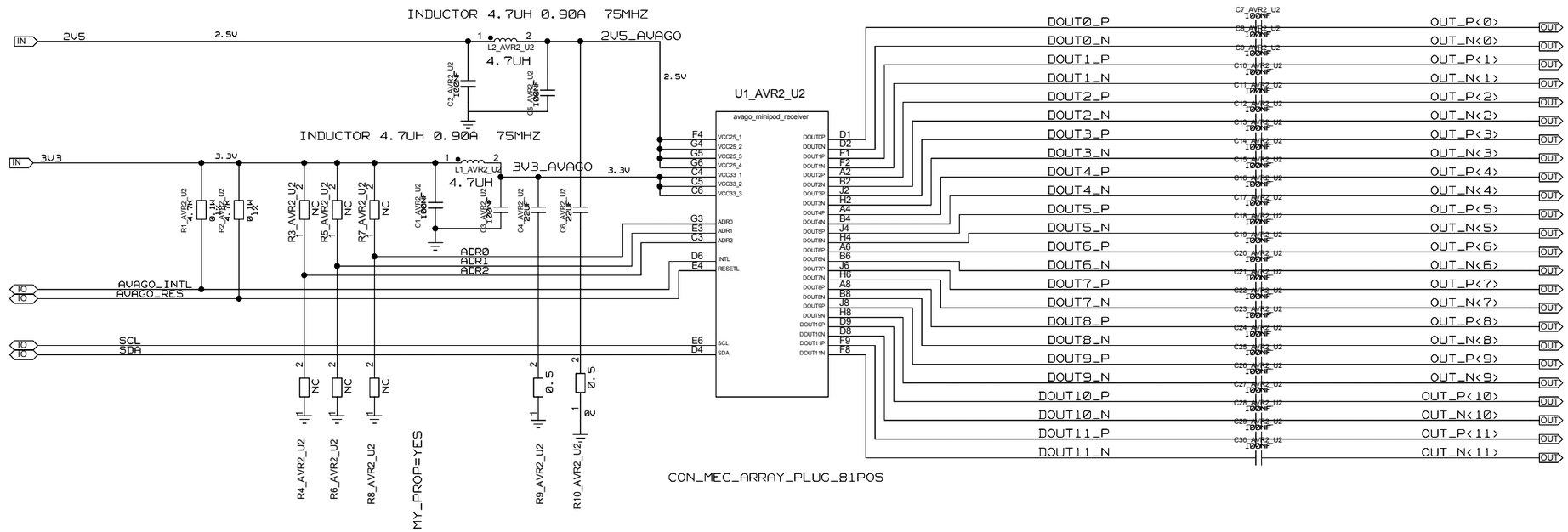

UNIVERSITY OF MAINZ	DRAWING TITLE: AVAGO RECEIVER		
	SIZE: C	REV.	DRAWING NO.
	SCALE		SHEET OF

REVISIONS				
ZONE	LTR	DESCRIPTION	DATE	APPR.

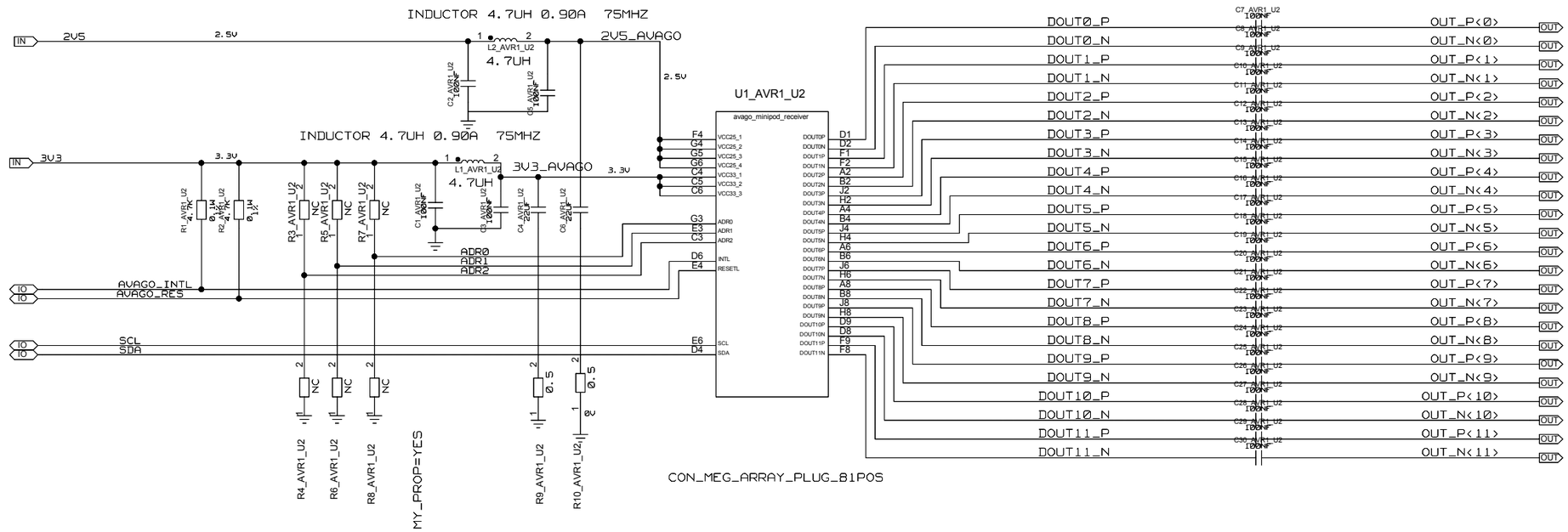

UNIVERSITY OF MAINZ	DRAWING TITLE: AVAGO RECEIVER		
	SIZE: C	REV.	DRAWING NO.
	SCALE		SHEET OF

REVISIONS				
ZONE	LTR	DESCRIPTION	DATE	APPR.

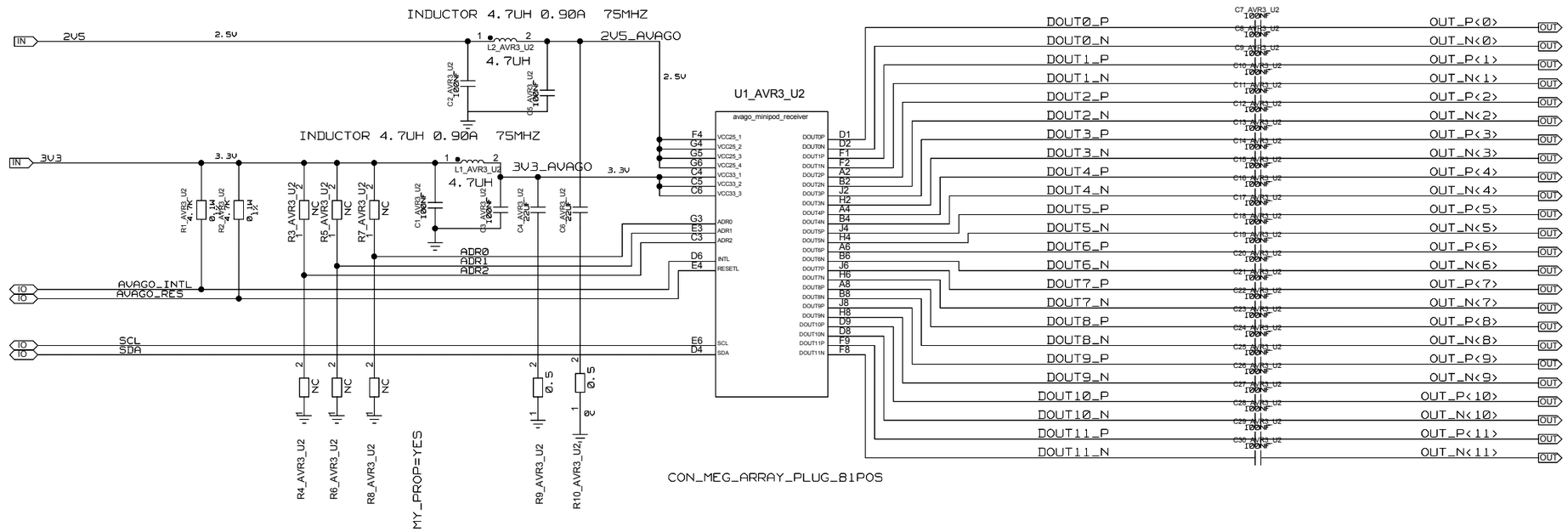

UNIVERSITY OF MAINZ

DRAWING TITLE

AVAGO RECEIVER

SIZE C | REV. | DRAWING NO.

SCALE | SHEET OF

REVISIONS				
ZONE	LTR	DESCRIPTION	DATE	APPR.

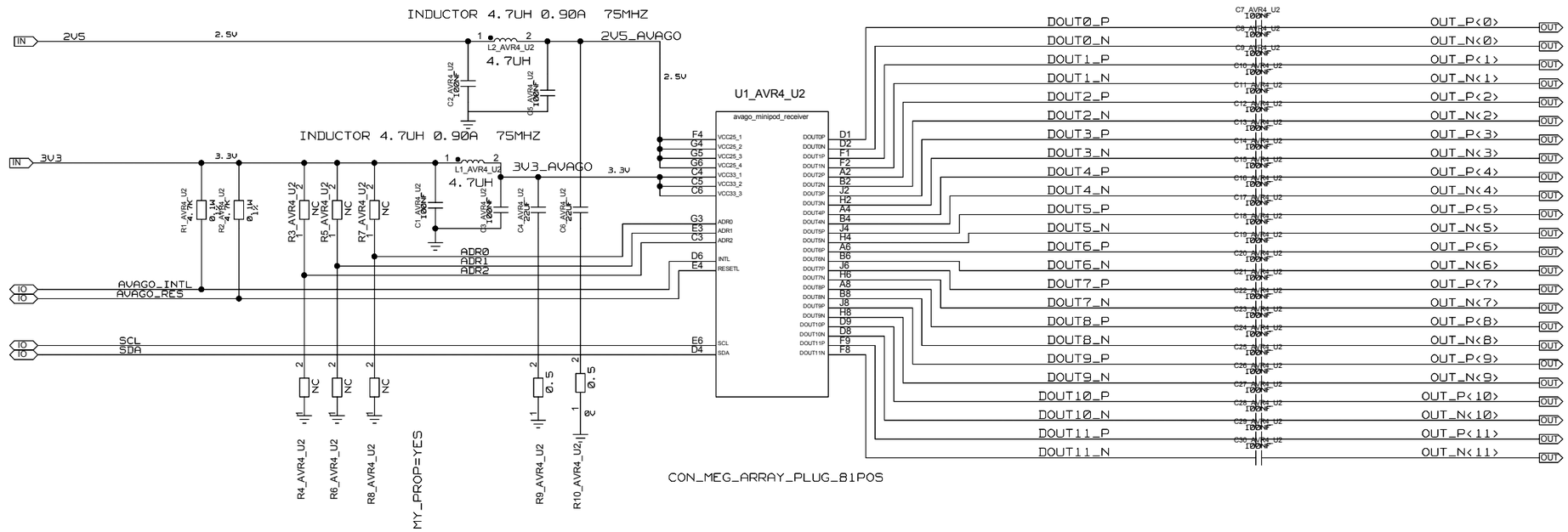

UNIVERSITY OF MAINZ	DRAWING TITLE: AVAGO RECEIVER		
	SIZE: C	REV.	DRAWING NO.
	SCALE		SHEET OF

REVISIONS				
ZONE	LTR	DESCRIPTION	DATE	APPR.

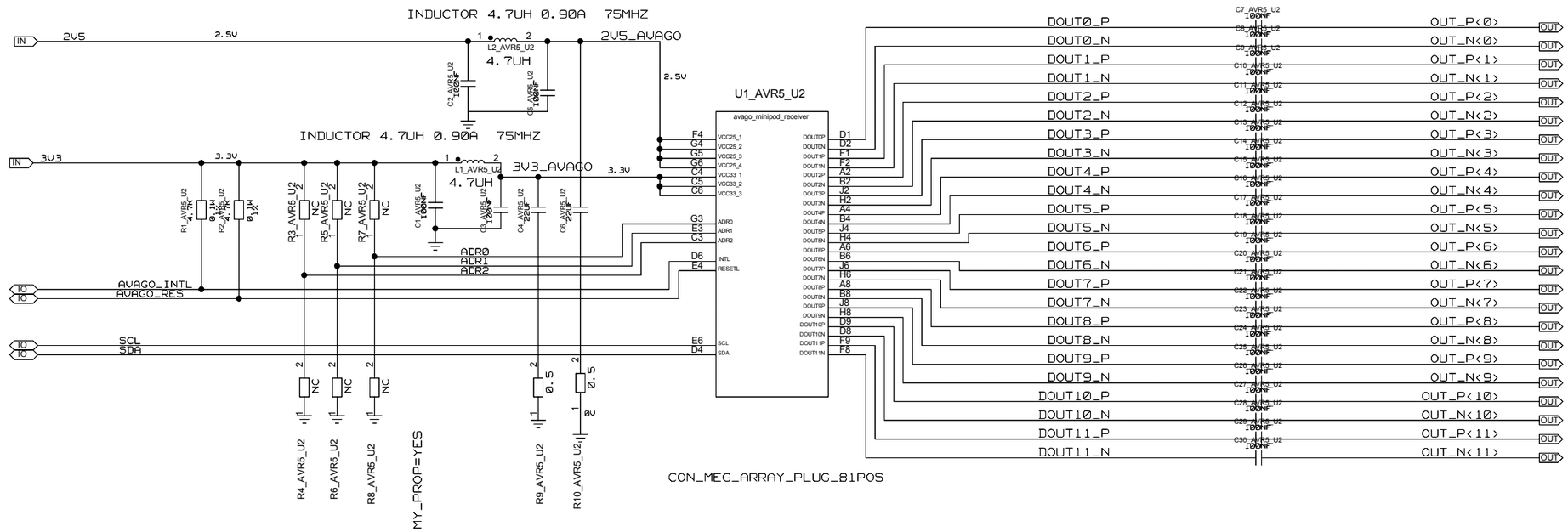

UNIVERSITY OF MAINZ	DRAWING TITLE: AVAGO RECEIVER		
	SIZE: C	REV.	DRAWING NO.
	SCALE		SHEET OF

REVISIONS				
ZONE	LTR	DESCRIPTION	DATE	APPR.

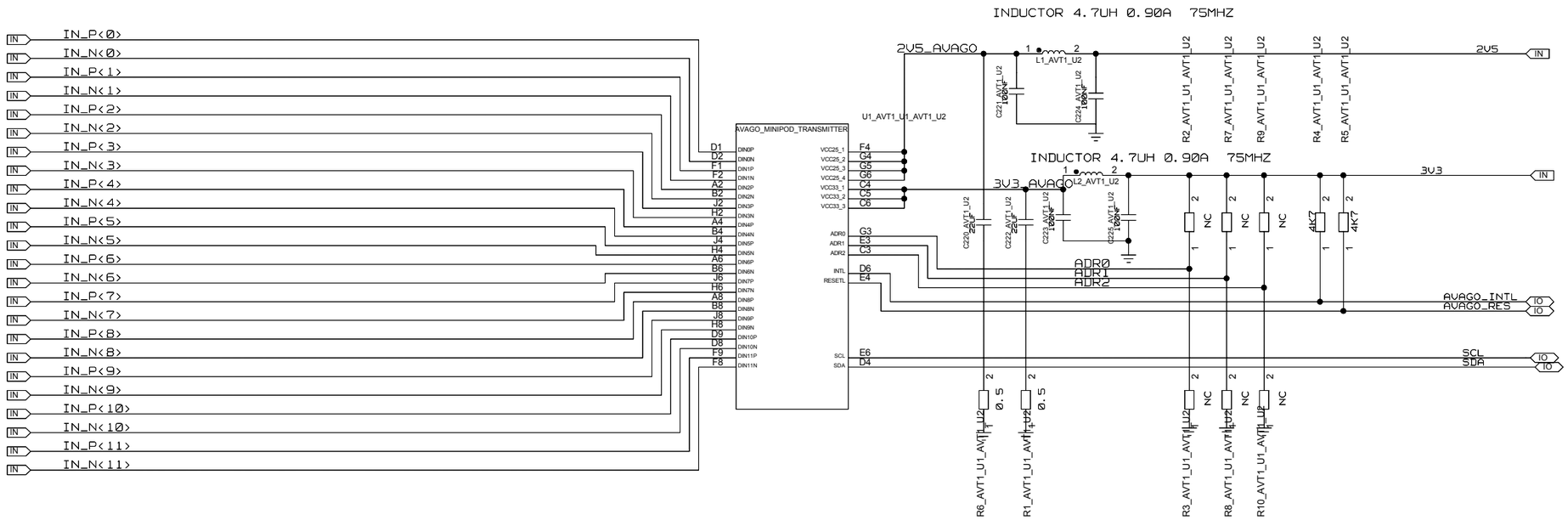

UNIVERSITY OF MAINZ

DRAWING TITLE

AVAGO TRANSMITTER

SIZE	REV.	DRAWING NO.
C		

SCALE | SHEET OF

REVISIONS				
ZONE	LTR	DESCRIPTION	DATE	APPR.

AC COUPLING

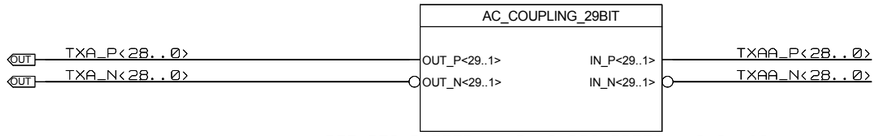

REF_DES_PATTERN=($PHYS_DES_PREFIX)[0-9]-A3

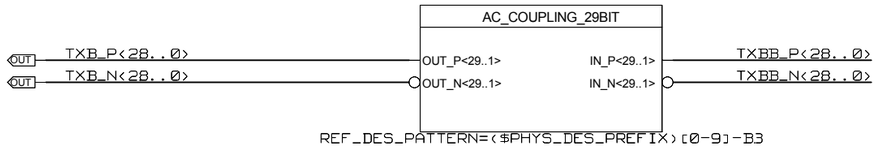

REF_DES_PATTERN=($PHYS_DES_PREFIX)[0-9]-B3

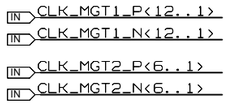

	NAME	DATE	SIGN
CHECKED	J. V.DE SOUZA		
CHECKED	U.SCHAEFER		
CHECKED	S.RAVE		
DRAWN	BAUSS	07.08.2015	

BLOCK TITLE
U3_MGT_REAL_TIME

UNIVERSITY OF MAINZ

DRAWING TITLE
I/O + AC COUPLING

SIZE C | REV. | DRAWING NO.

SCALE | SHEET 1 OF 7

REVISIONS				
ZONE	LTR	DESCRIPTION	DATE	APPR.

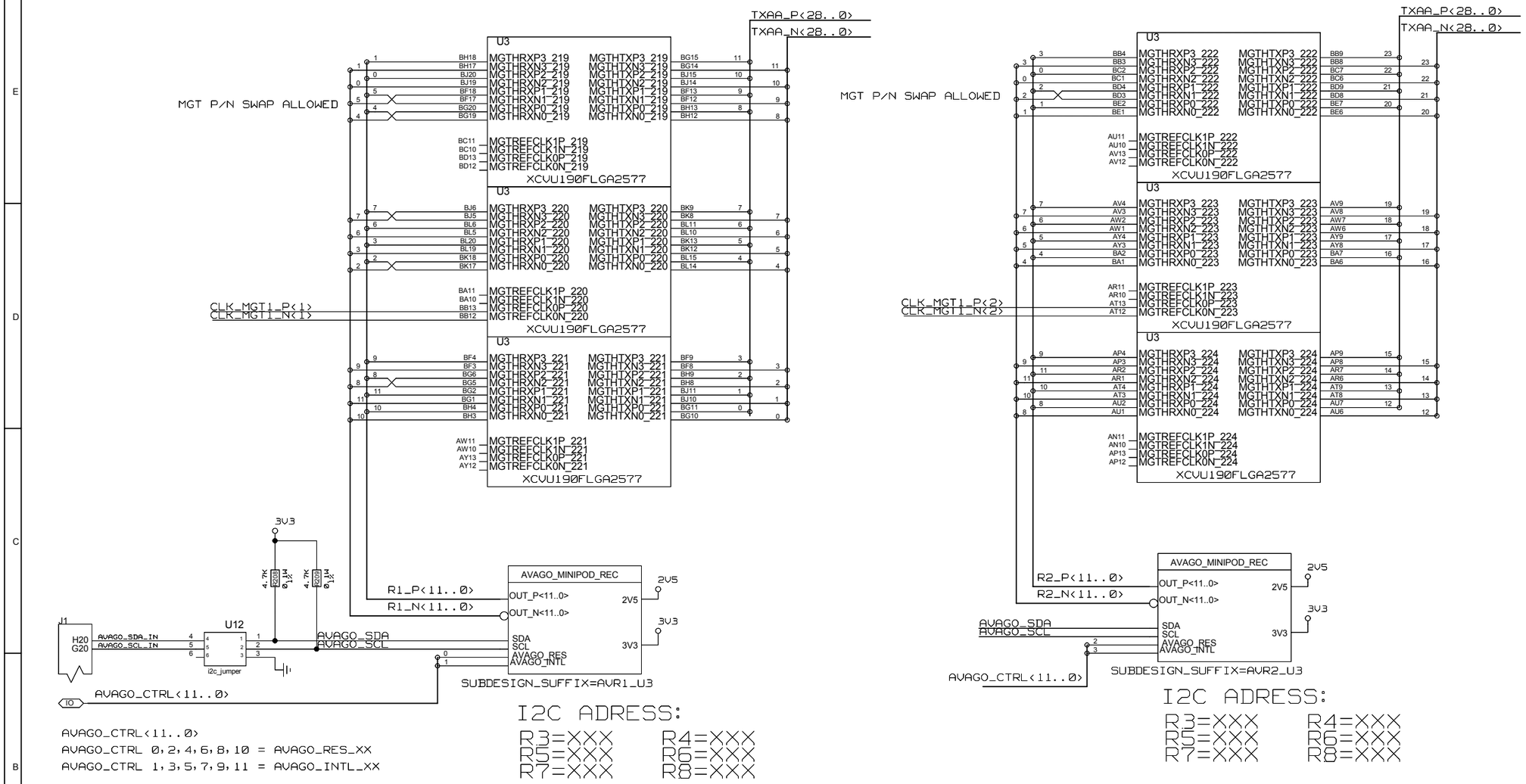

BANK
219
220
221
222
223

	NAME	DATE	SIGN
CHECKED	J. V.DE SOUZA		
CHECKED	U.SCHAEFER		
CHECKED	S.RAVE		
DRAWN	BAUSS	07.08.2015	

BLOCK TITLE: U3_MGT_REAL_TIME

DRAWING TITLE: AVAGO TXA

UNIVERSITY OF MAINZ

SIZE: C | REV. | DRAWING NO.

SCALE | SHEET 2 OF 7

REVISIONS				
ZONE	LTR	DESCRIPTION	DATE	APPR.

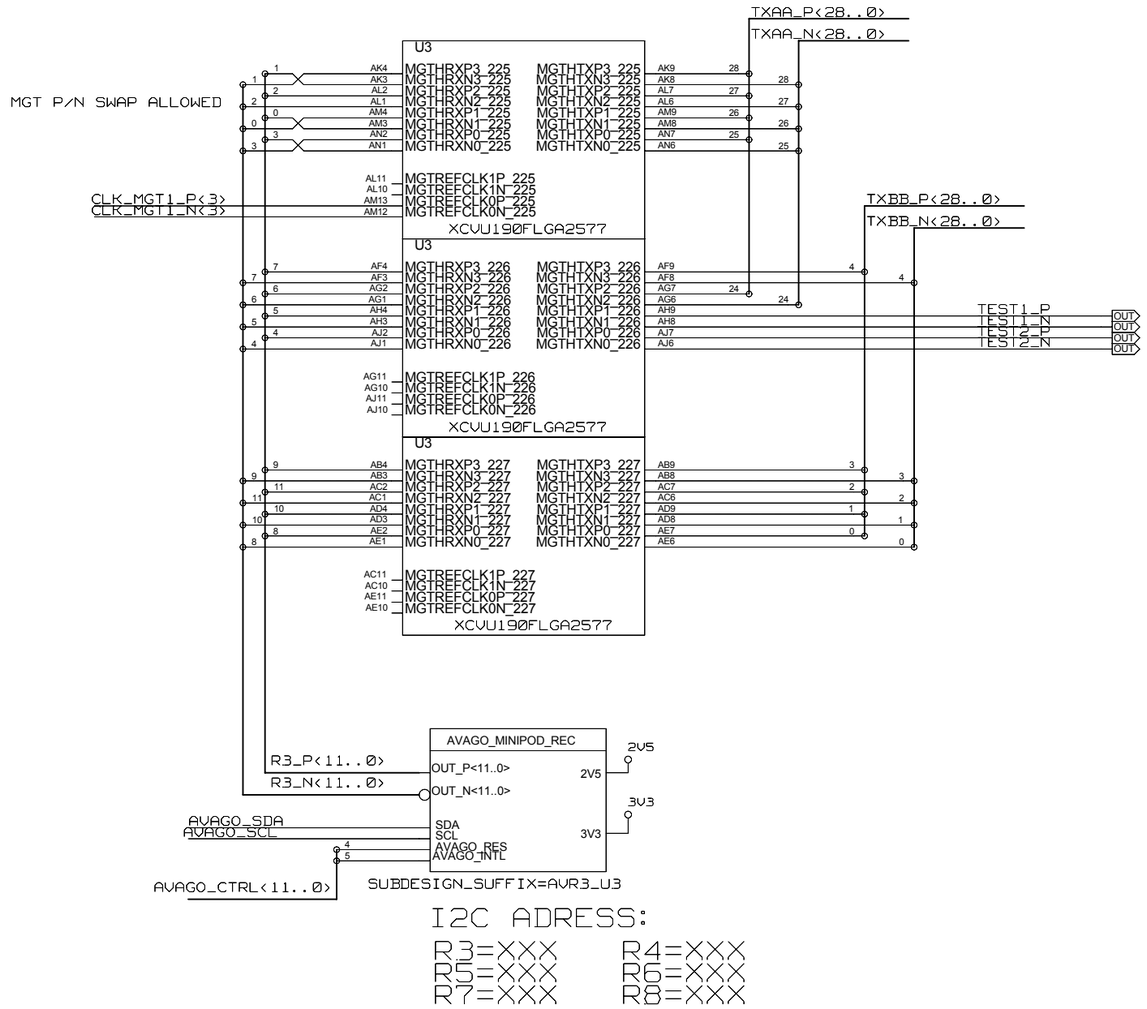

I2C ADRESS:

R3=XXX R4=XXX
R5=XXX R6=XXX
R7=XXX R8=XXX

BANK
225
226
227

	NAME	DATE	SIGN
CHECKED	J. V.DE SOUZA		
CHECKED	U.SCHAEFER		
CHECKED	S.RAVE		
DRAWN	BAUSS	07.08.2015	

BLOCK TITLE
U3_MGT_REAL_TIME

DRAWING TITLE
AVAGO
TXA + TXB

UNIVERSITY OF MAINZ

SIZE C | REV. | DRAWING NO.

SCALE | SHEET 3 OF 7

REVISIONS				
ZONE	LTR	DESCRIPTION	DATE	APPR.

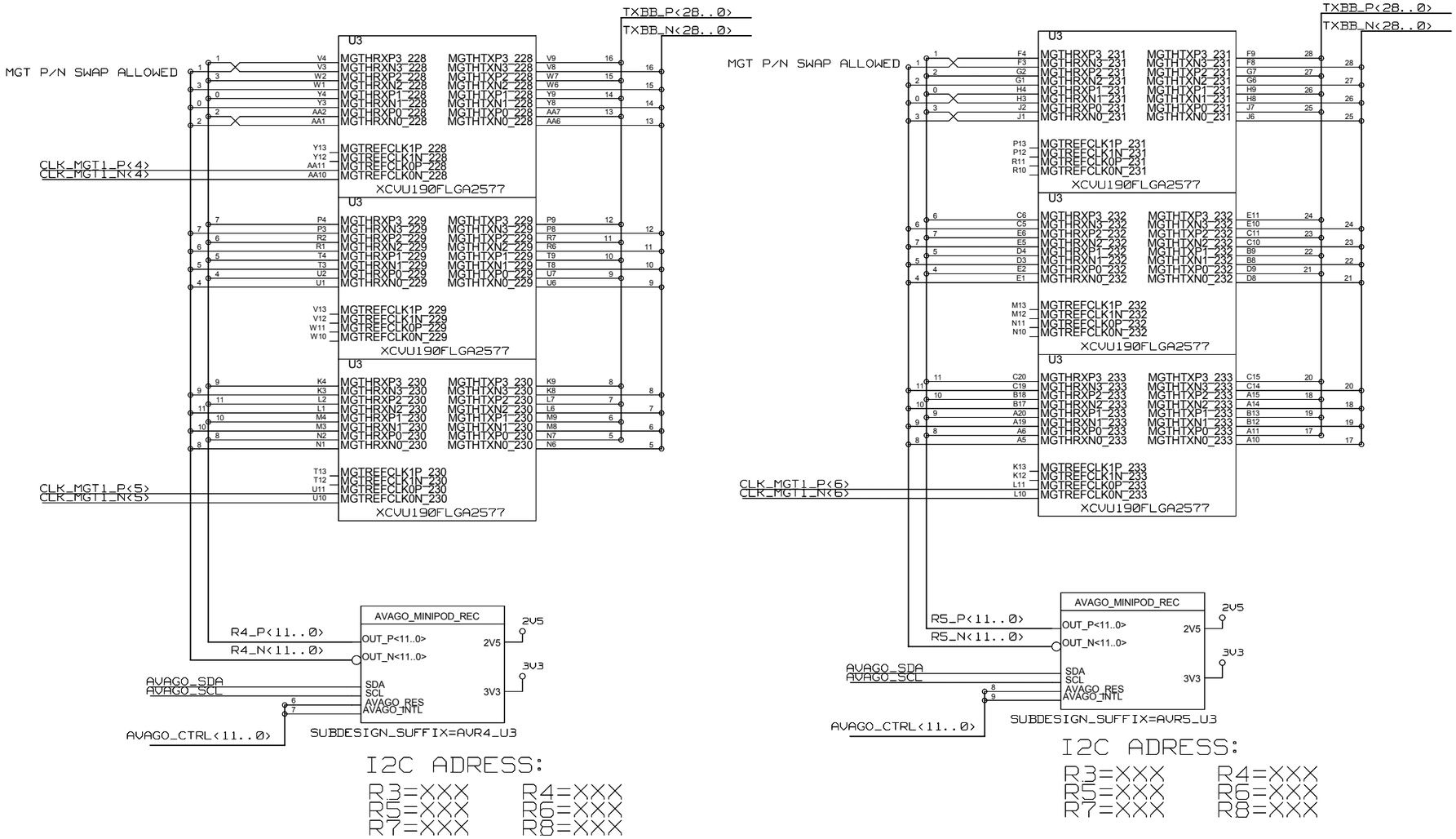

BANK
228
229
230
231
232
233

	NAME	DATE	SIGN
CHECKED	J. V.DE SOUZA		
CHECKED	U.SCHAEFER		
CHECKED	S.RAVE		
DRAWN	BAUSS	07.08.2015	

BLOCK TITLE
U3_MGT_REAL_TIME

DRAWING TITLE
AVAGO
TXB

UNIVERSITY OF MAINZ

SIZE C | REV. | DRAWING NO.

SCALE | SHEET 4 OF 7

REVISIONS				
ZONE	LTR	DESCRIPTION	DATE	APPR.

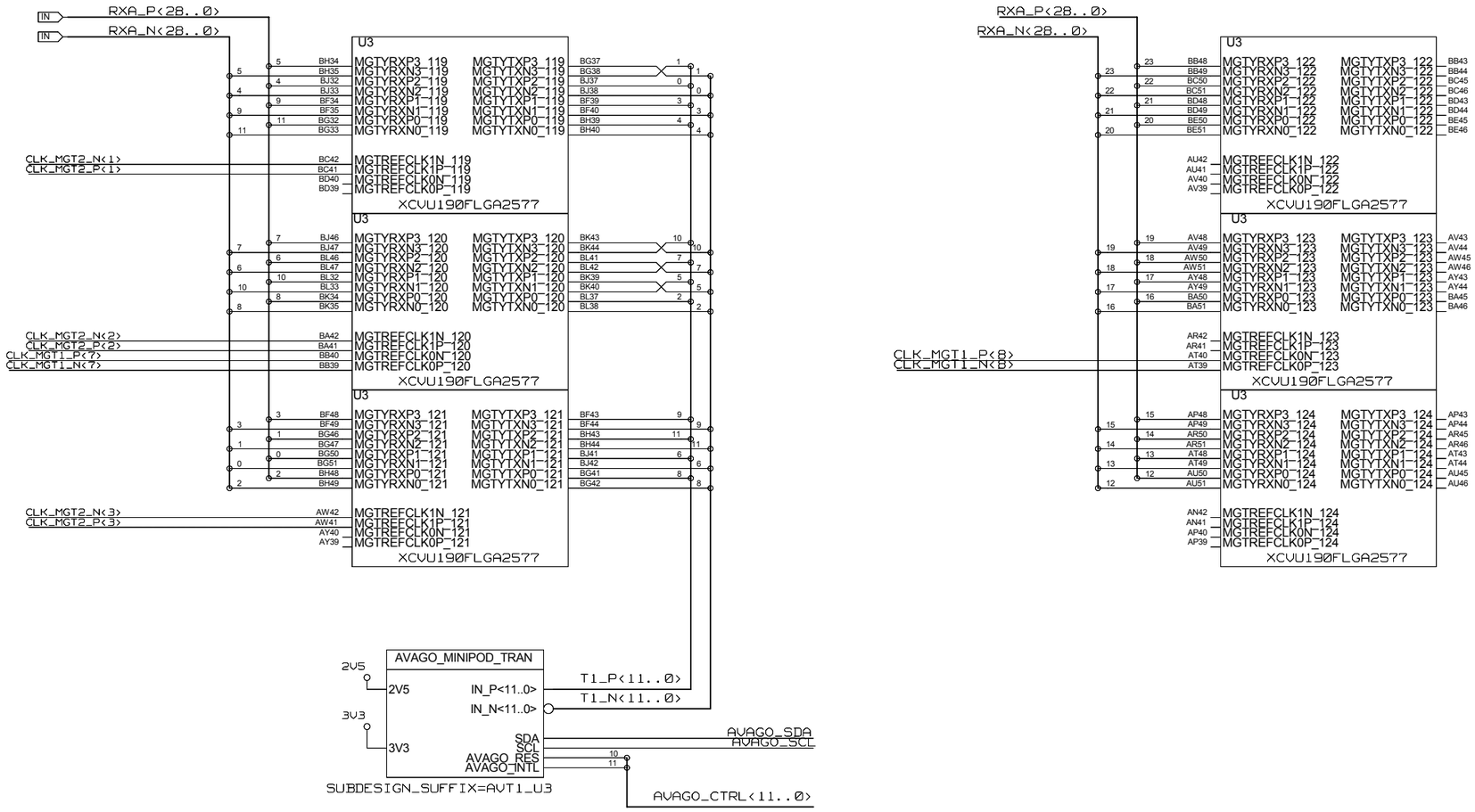

I2C ADRESS:

R3=XXX R4=XXX
R5=XXX R6=XXX
R7=XXX R8=XXX

BANK
119
120
121
122
123
124

	NAME	DATE	SIGN
CHECKED	J. V.DE SOUZA		
CHECKED	U.SCHAEFER		
CHECKED	S.RAVE		
DRAWN	BAUSS	07.08.2015	

BLOCK TITLE
U3_MGT_REAL_TIME

DRAWING TITLE
AVAGO
RXA

UNIVERSITY OF MAINZ

SIZE C | REV. | DRAWING NO.

SCALE | SHEET 5 OF 7

REVISIONS				
ZONE	LTR	DESCRIPTION	DATE	APPR.

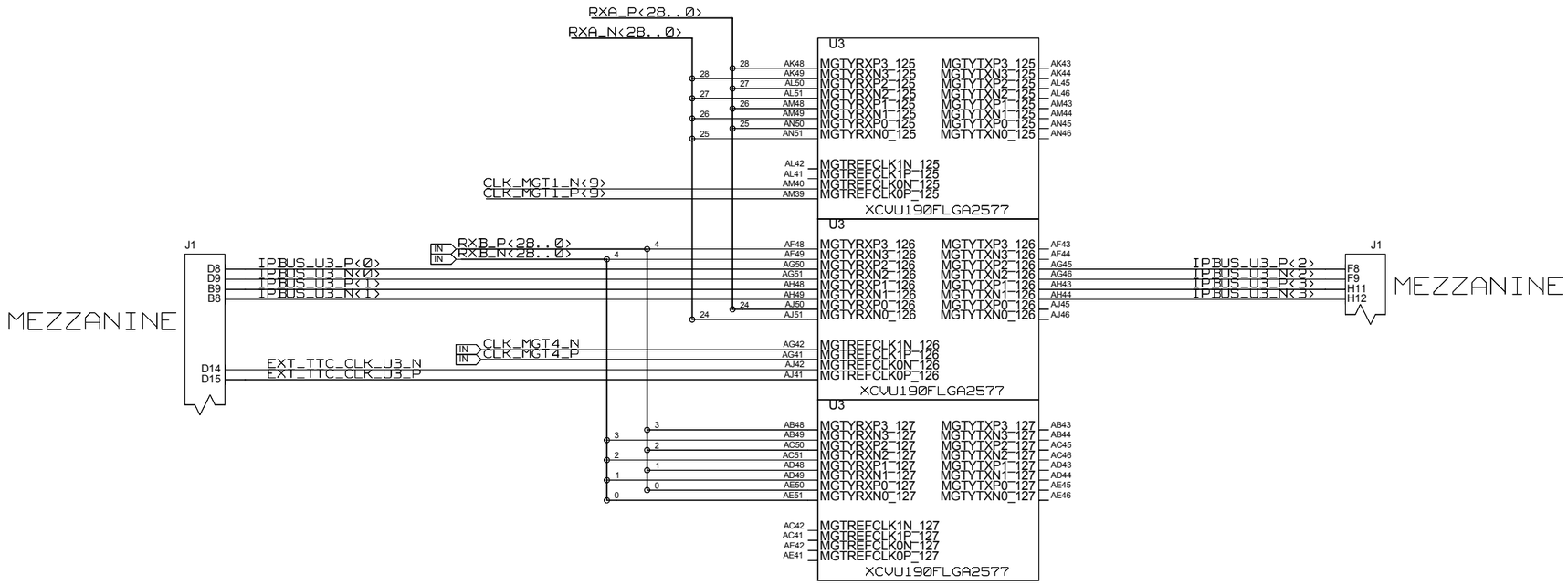

BANK
125
126
127

	NAME	DATE	SIGN
CHECKED	J. V.DE SOUZA		
CHECKED	U.SCHAEFER		
CHECKED	S.RAVE		
DRAWN	BAUSS	07.08.2015	

BLOCK TITLE: U3_MGT_REAL_TIME

DRAWING TITLE: RXA + RXB TXD + IPBUS

UNIVERSITY OF MAINZ

SIZE: C | REV. | DRAWING NO.

SCALE | SHEET 6 OF 7

REVISIONS				
ZONE	LTR	DESCRIPTION	DATE	APPR.

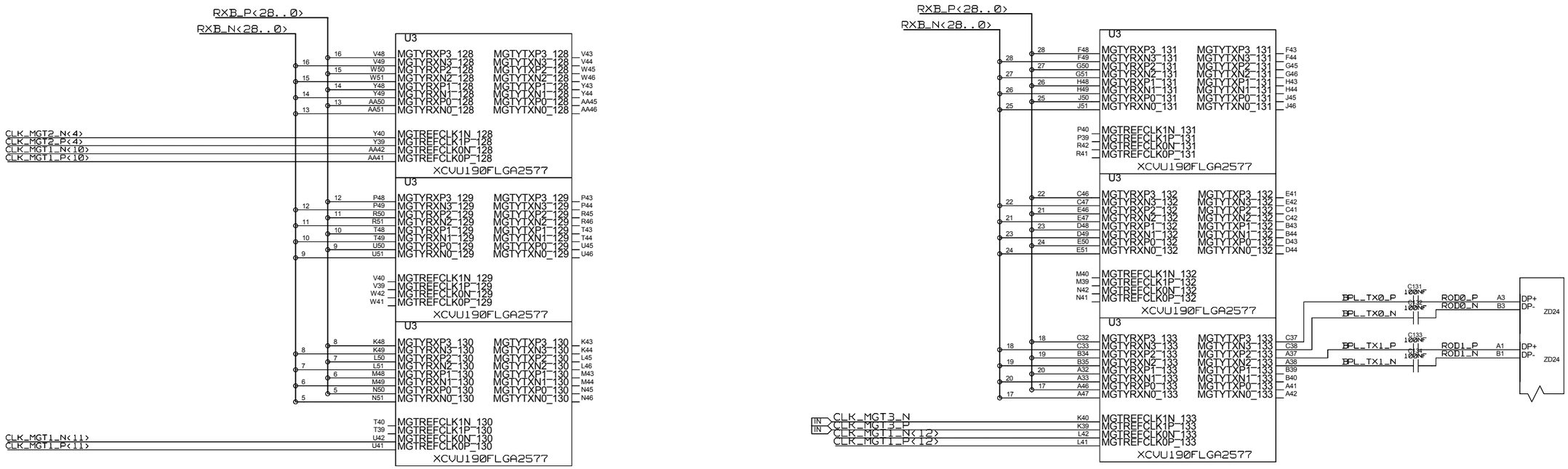

BANK
128
129
130
131
132
133

	NAME	DATE	SIGN
CHECKED	J. V.DE SOUZA		
CHECKED	U.SCHAEFER		
CHECKED	S.RAVE		
DRAWN	BAUSS	07.08.2015	

BLOCK TITLE
U3_MGT_REAL_TIME

DRAWING TITLE
RXB + TXC

UNIVERSITY OF MAINZ

SIZE C | REV. | DRAWING NO.

SCALE | SHEET 7 OF 7

REVISIONS				
ZONE	LTR	DESCRIPTION	DATE	APPR.

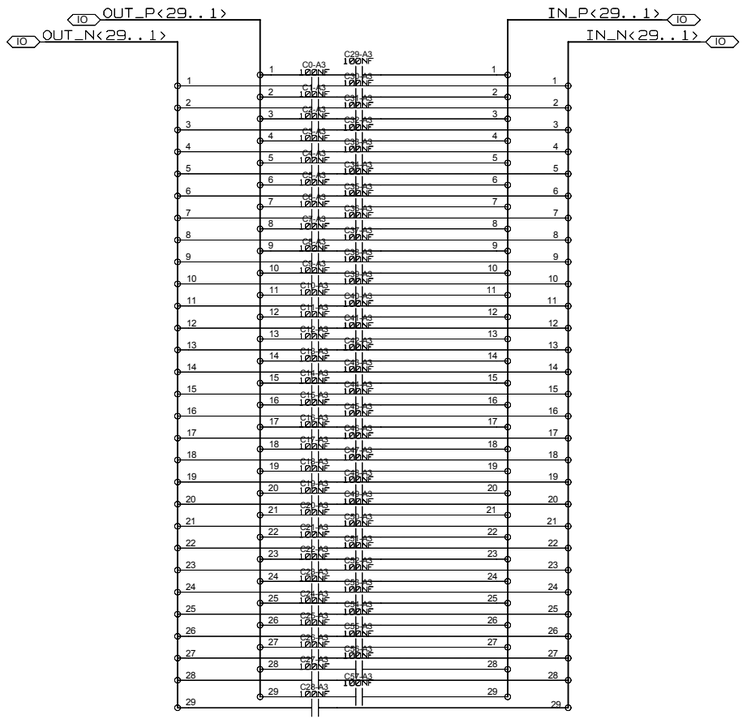

	NAME	DATE	SIGN
CHECKED	J. V.DE SOUZA		
CHECKED	U.SCHAEFER		
CHECKED	S.RAVE		
DRAWN	BAUSS		
BLOCK TITLE			

DRAWING TITLE

AC COUPLING 29BIT

UNIVERSITY OF MAINZ

SIZE C | REV. | DRAWING NO.

SCALE | SHEET OF

REVISIONS				
ZONE	LTR	DESCRIPTION	DATE	APPR.

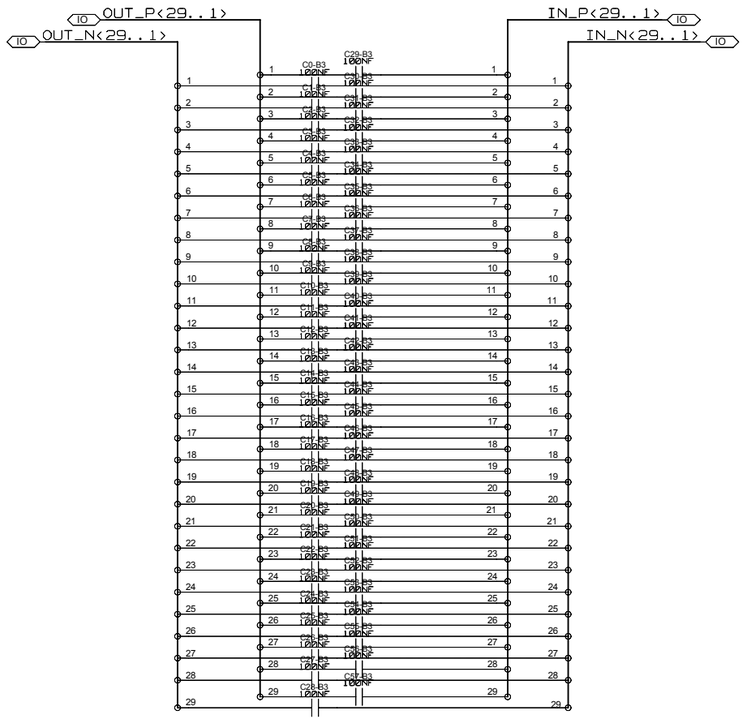

	NAME	DATE	SIGN
CHECKED	J. V.DE SOUZA		
CHECKED	U.SCHAEFER		
CHECKED	S.RAVE		
DRAWN	BAUSS		
BLOCK TITLE			

DRAWING TITLE

AC COUPLING 29BIT

UNIVERSITY OF MAINZ

SIZE C | REV. | DRAWING NO.

SCALE | SHEET OF

REVISIONS				
ZONE	LTR	DESCRIPTION	DATE	APPR.

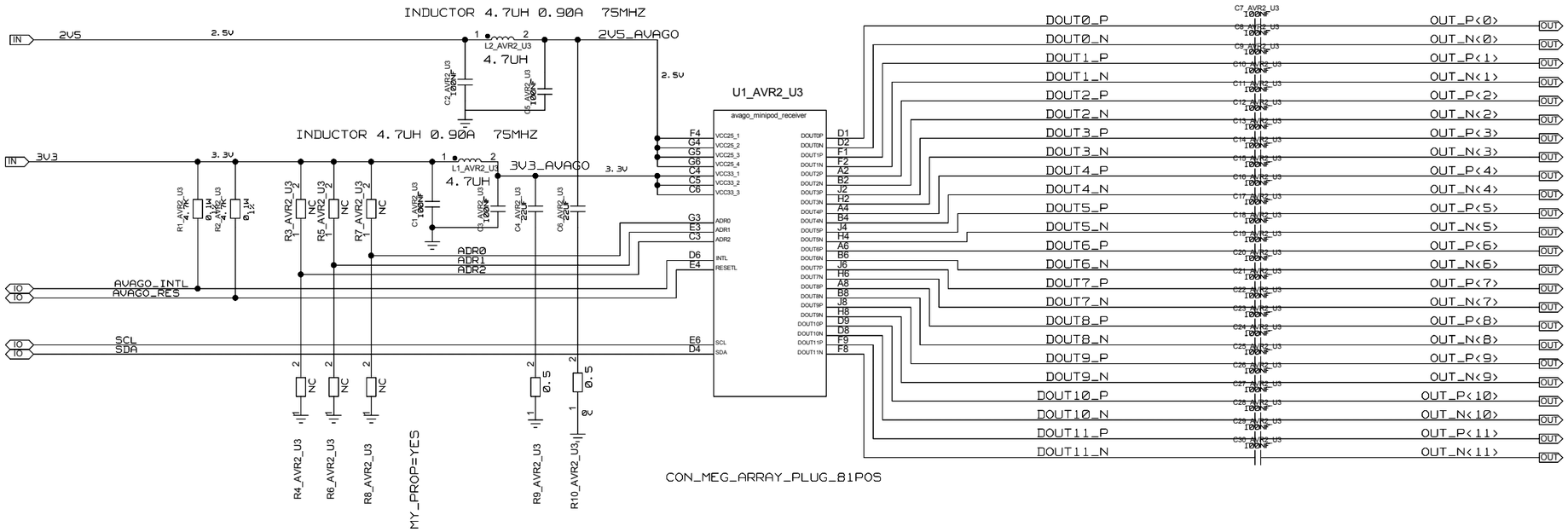

UNIVERSITY OF MAINZ	DRAWING TITLE: AVAGO RECEIVER		
	SIZE: C	REV.	DRAWING NO.
	SCALE		SHEET OF

REVISIONS				
ZONE	LTR	DESCRIPTION	DATE	APPR.

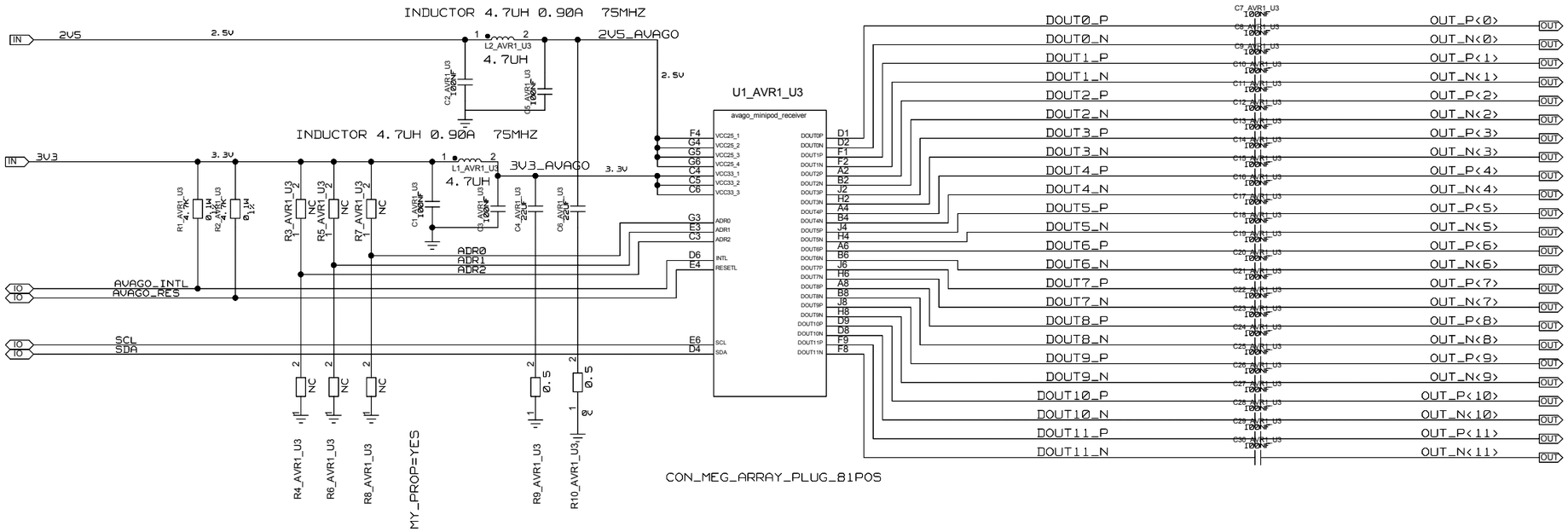

UNIVERSITY OF MAINZ	DRAWING TITLE: AVAGO RECEIVER		
	SIZE: C	REV.	DRAWING NO.
	SCALE		SHEET OF

REVISIONS				
ZONE	LTR	DESCRIPTION	DATE	APPR.

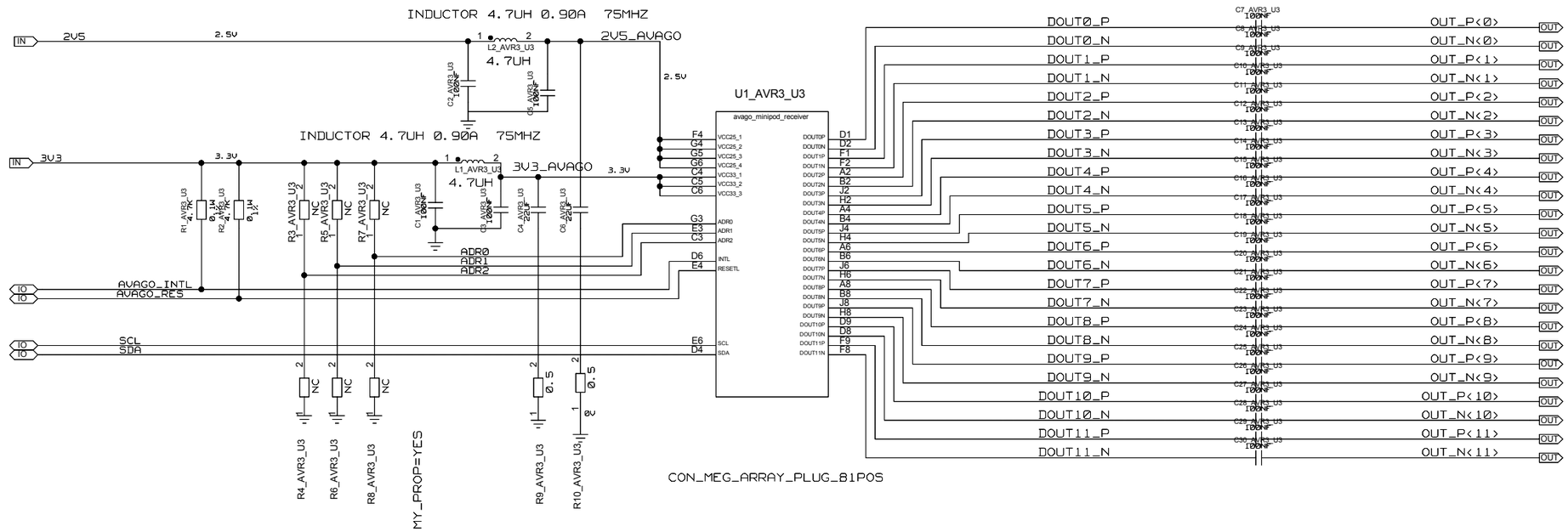

UNIVERSITY OF MAINZ	DRAWING TITLE: AVAGO RECEIVER		
	SIZE: C	REV.	DRAWING NO.
	SCALE		SHEET OF

REVISIONS				
ZONE	LTR	DESCRIPTION	DATE	APPR.

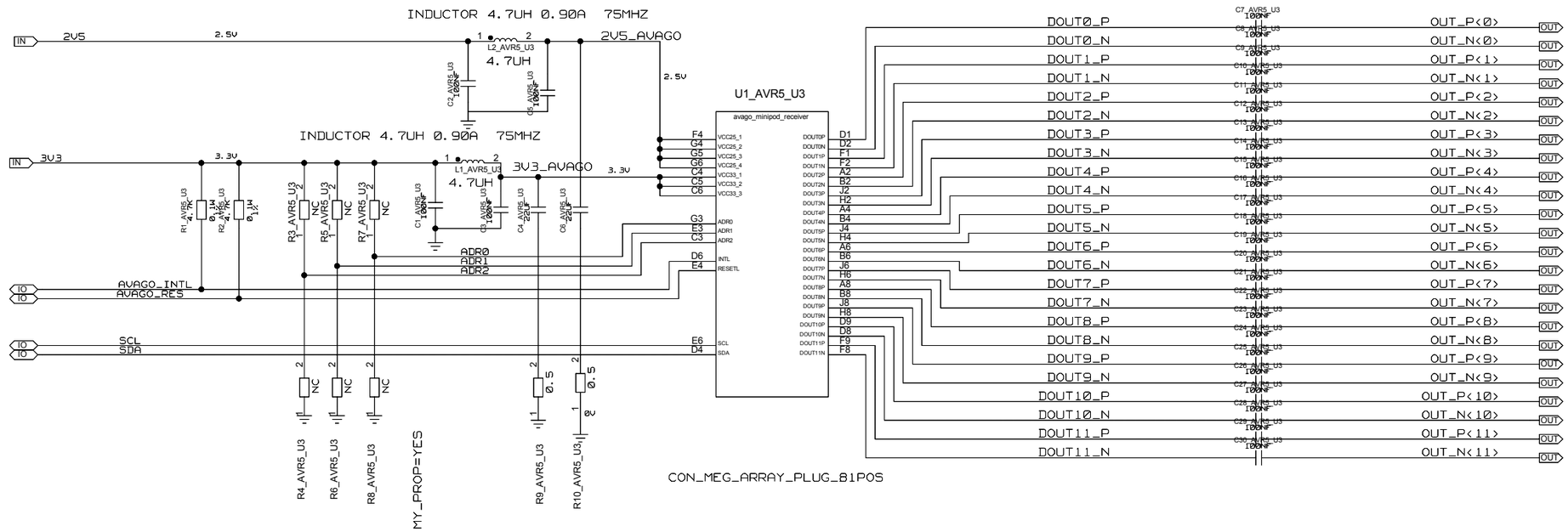

UNIVERSITY OF MAINZ	DRAWING TITLE: AVAGO RECEIVER		
	SIZE: C	REV.	DRAWING NO.
	SCALE		SHEET OF

REVISIONS				
ZONE	LTR	DESCRIPTION	DATE	APPR.

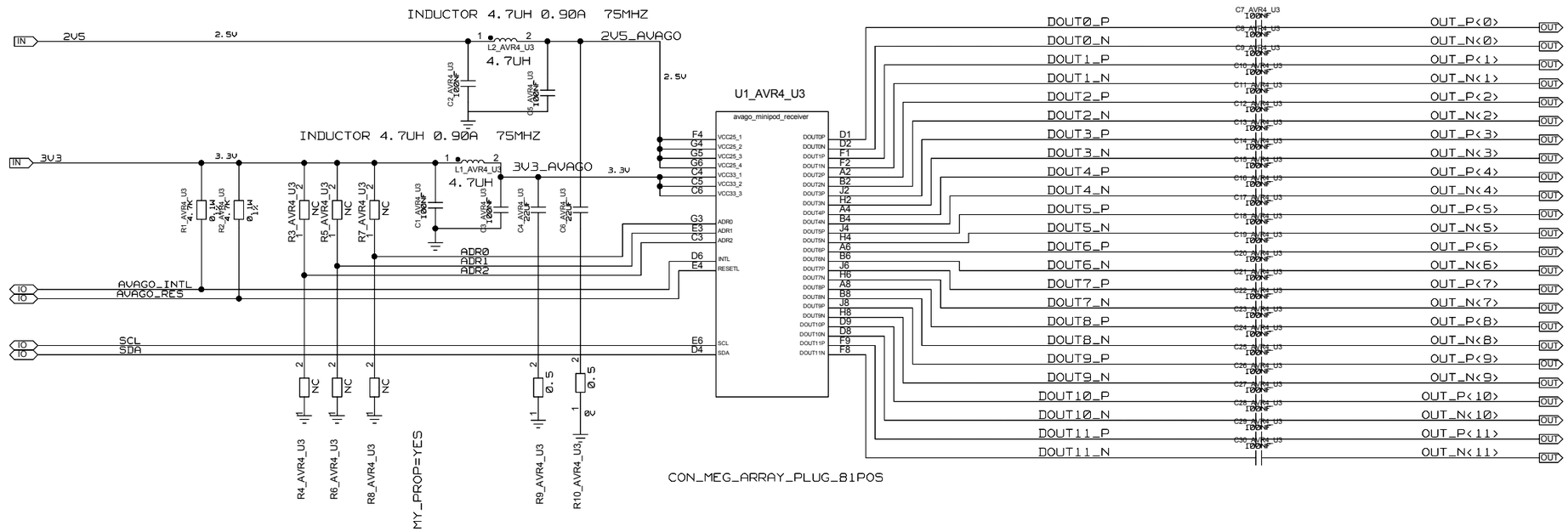

UNIVERSITY OF MAINZ	DRAWING TITLE AVAGO RECEIVER		
	SIZE C	REV.	DRAWING NO.
	SCALE		SHEET OF

REVISIONS				
ZONE	LTR	DESCRIPTION	DATE	APPR.

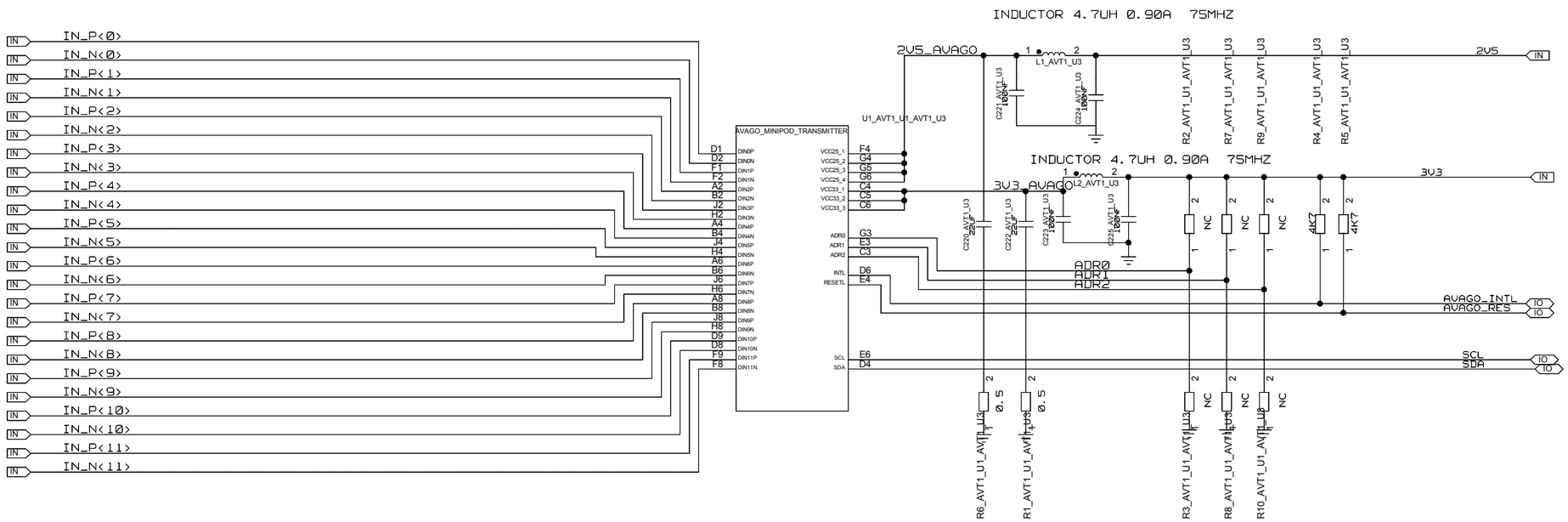

UNIVERSITY OF MAINZ

DRAWING TITLE

AVAGO TRANSMITTER

SIZE	REV.	DRAWING NO.
C		

SCALE | SHEET OF

REVISIONS				
ZONE	LTR	DESCRIPTION	DATE	APPR.

AC COUPLING

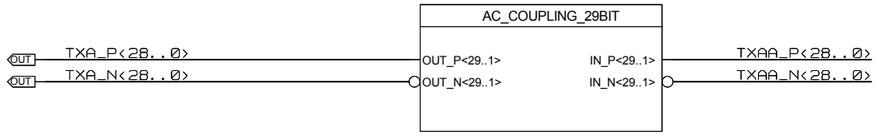

REF_DES_PATTERN=($PHYS_DES_PREFIX)[0-9]-A4

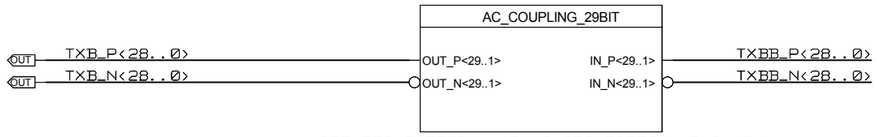

REF_DES_PATTERN=($PHYS_DES_PREFIX)[0-9]-B4

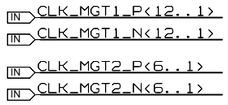

	NAME	DATE	SIGN
CHECKED	J. V.DE SOUZA		
CHECKED	U.SCHAEFER		
CHECKED	S.RAVE		
DRAWN	BAUSS	07.08.2015	

BLOCK TITLE
U4_MGT_REAL_TIME

UNIVERSITY OF MAINZ

DRAWING TITLE
I/O +
AC COUPLING

SIZE C | REV. | DRAWING NO.

SCALE | SHEET 1 OF 7

REVISIONS				
ZONE	LTR	DESCRIPTION	DATE	APPR.

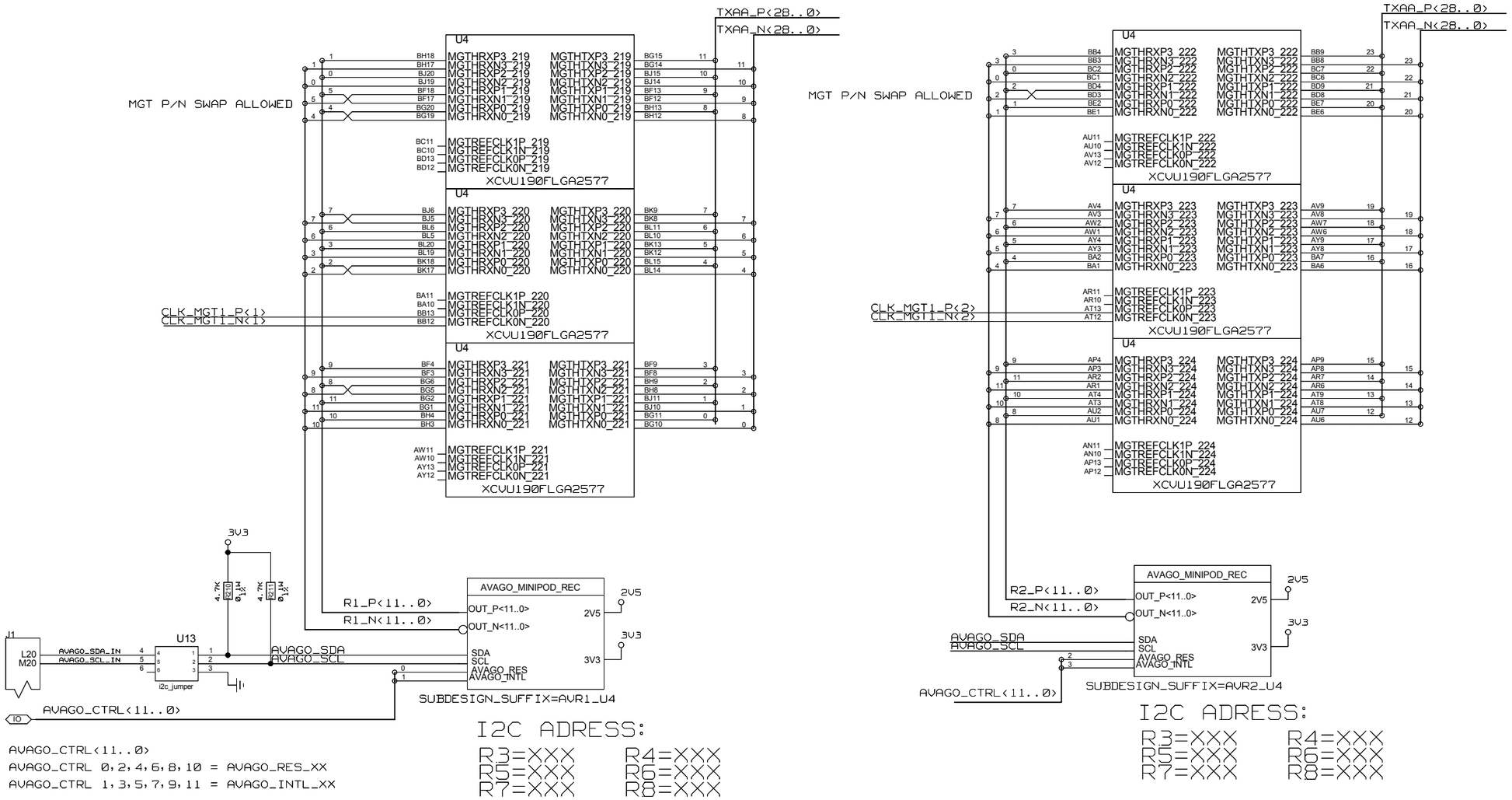

BANK
219
220
221
222
223

	NAME	DATE	SIGN
CHECKED	J. V.DE SOUZA		
CHECKED	U.SCHAEFER		
CHECKED	S.RAVE		
DRAWN	BAUSS	07.08.2015	

BLOCK TITLE
U4_MGT_REAL_TIME

DRAWING TITLE
AVAGO
TXA

UNIVERSITY OF MAINZ

SIZE C | REV. | DRAWING NO.

SCALE | SHEET 2 OF 7

REVISIONS				
ZONE	LTR	DESCRIPTION	DATE	APPR.

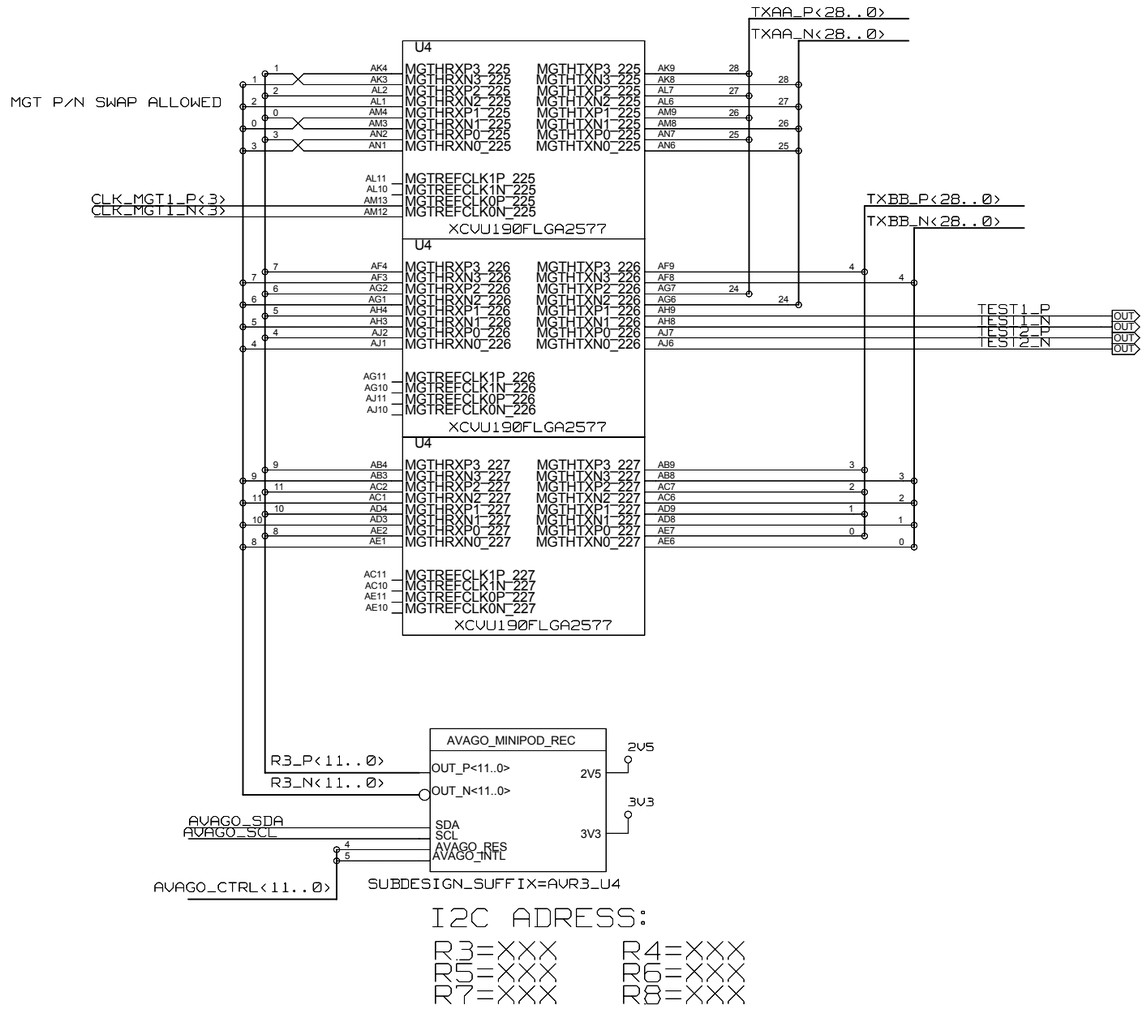

I2C ADRESS:

R3=XXX R4=XXX
R5=XXX R6=XXX
R7=XXX R8=XXX

BANK
225
226
227

	NAME	DATE	SIGN
CHECKED	J. V.DE SOUZA		
CHECKED	U.SCHAEFER		
CHECKED	S.RAVE		
DRAWN	BAUSS	07.08.2015	

BLOCK TITLE
U4_MGT_REAL_TIME

DRAWING TITLE
AVAGO
TXA + TXB

UNIVERSITY OF MAINZ

SIZE C | REV. | DRAWING NO.

SCALE | SHEET 3 OF 7

REVISIONS				
ZONE	LTR	DESCRIPTION	DATE	APPR.

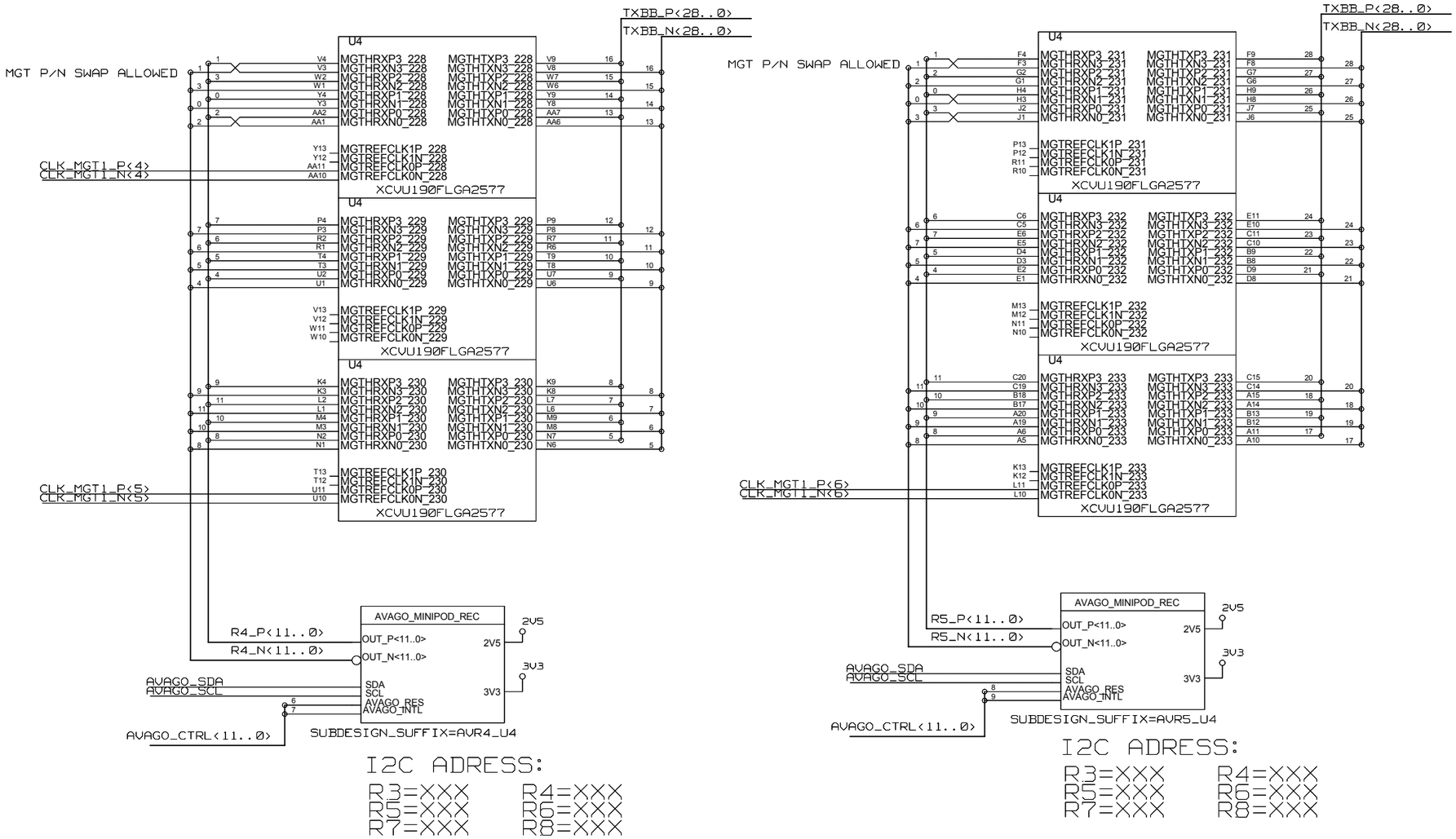

BANK
228
229
230
231
232
233

	NAME	DATE	SIGN
CHECKED	J. V.DE SOUZA		
CHECKED	U.SCHAEFER		
CHECKED	S.RAVE		
DRAWN	BAUSS	07.08.2015	

BLOCK TITLE
U4_MGT_REAL_TIME

DRAWING TITLE
AVAGO
TXB

UNIVERSITY OF MAINZ

SIZE C | REV. | DRAWING NO.

SCALE | SHEET 4 OF 7

REVISIONS				
ZONE	LTR	DESCRIPTION	DATE	APPR.

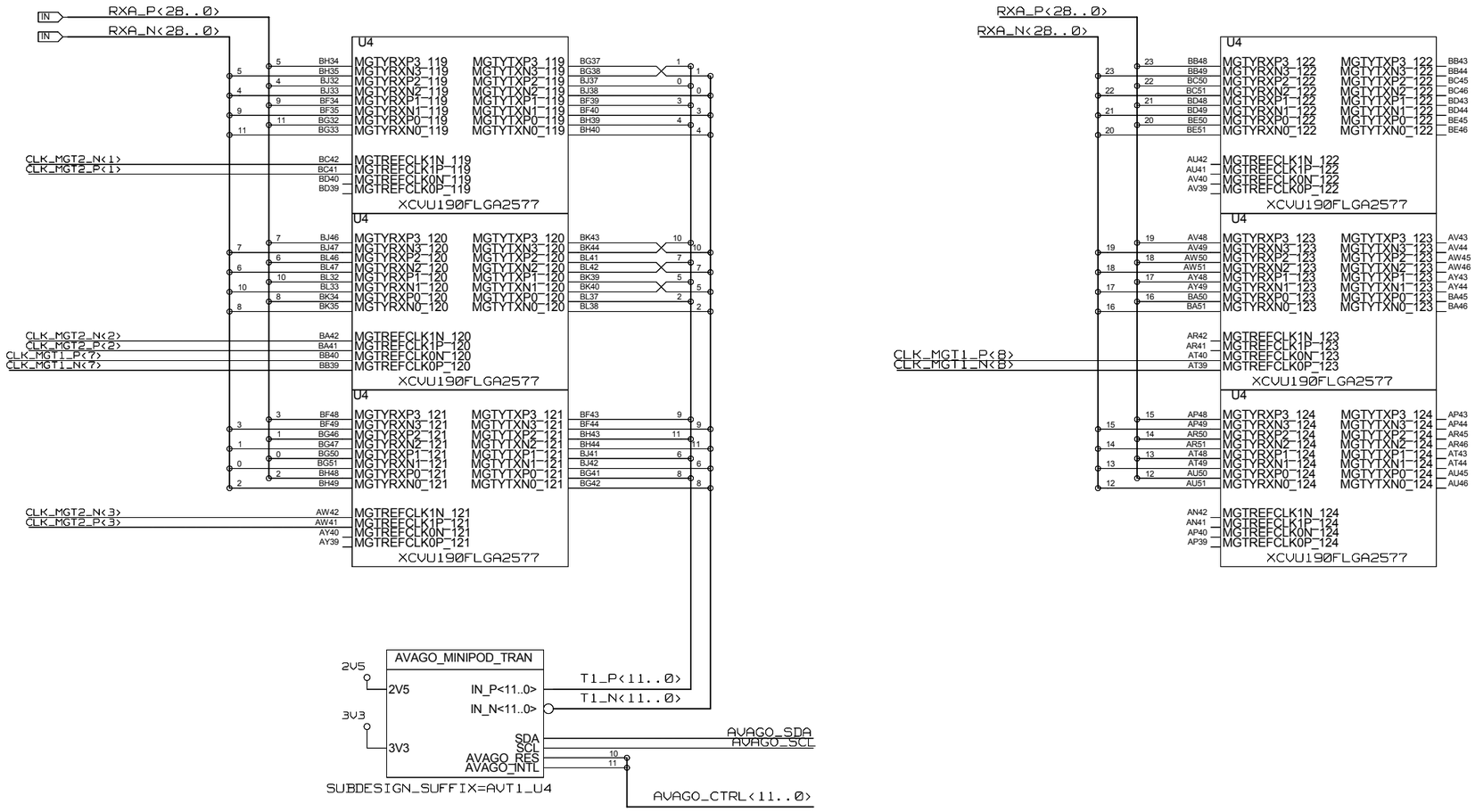

I2C ADRESS:

R3=XXX R4=XXX
R5=XXX R6=XXX
R7=XXX R8=XXX

BANK
119
120
121
122
123
124

	NAME	DATE	SIGN
CHECKED	J. V.DE SOUZA		
CHECKED	U.SCHAEFER		
CHECKED	S.RAVE		
DRAWN	BAUSS	07.08.2015	

BLOCK TITLE
U4_MGT_REAL_TIME

DRAWING TITLE
AVAGO
RXA

UNIVERSITY OF MAINZ

SIZE C | REV. | DRAWING NO.

SCALE | SHEET 5 OF 7

REVISIONS				
ZONE	LTR	DESCRIPTION	DATE	APPR.

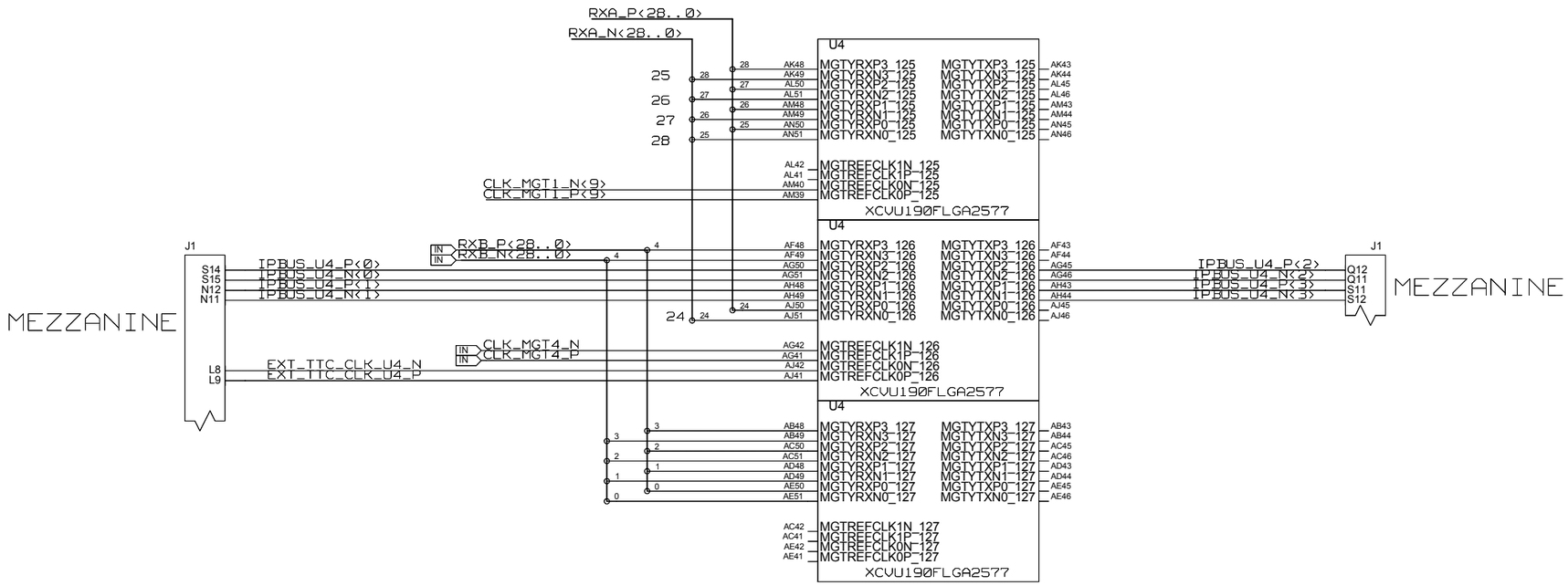

BANK
125
126
127

	NAME	DATE	SIGN
CHECKED	J. V.DE SOUZA		
CHECKED	U.SCHAEFER		
CHECKED	S.RAVE		
DRAWN	BAUSS	07.08.2015	

BLOCK TITLE
U4_MGT_REAL_TIME

DRAWING TITLE
RXA + RXB
TXD + IPBUS

UNIVERSITY OF MAINZ

SIZE C | REV. | DRAWING NO.

SCALE | SHEET 6 OF 7

REVISIONS				
ZONE	LTR	DESCRIPTION	DATE	APPR.

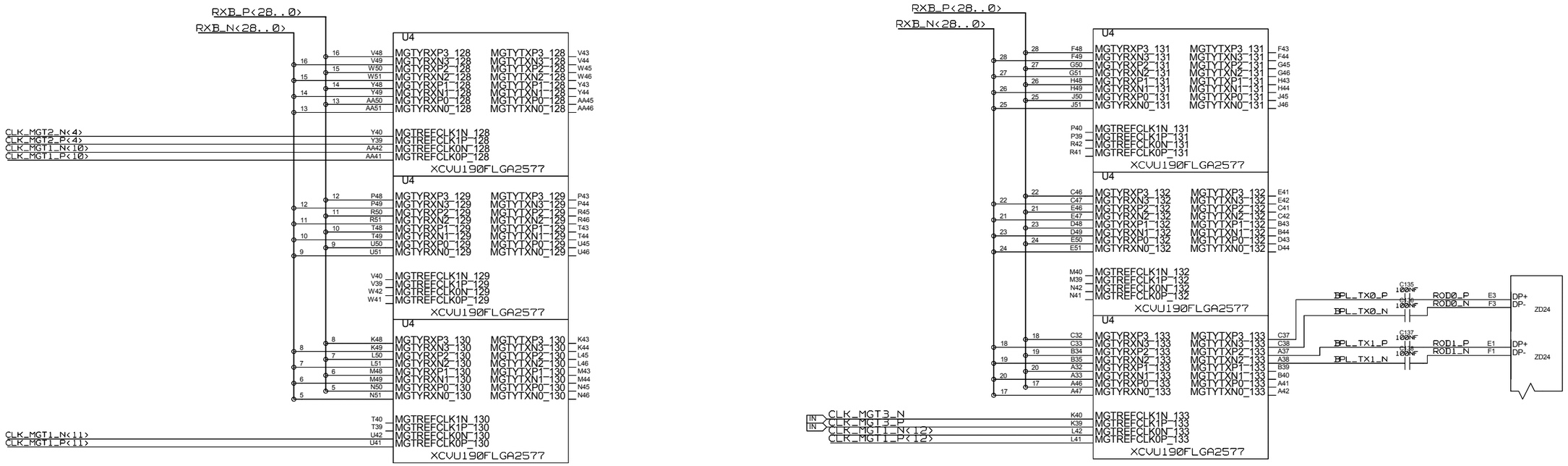

BANK
128
129
130
131
132
133

	NAME	DATE	SIGN
CHECKED	J. V.DE SOUZA		
CHECKED	U.SCHAEFER		
CHECKED	S.RAVE		
DRAWN	BAUSS	07.08.2015	

BLOCK TITLE
U4_MGT_REAL_TIME

DRAWING TITLE
RXB + TXC

UNIVERSITY OF MAINZ

SIZE C | REV. | DRAWING NO.

SCALE | SHEET 7 OF 7

REVISIONS				
ZONE	LTR	DESCRIPTION	DATE	APPR.

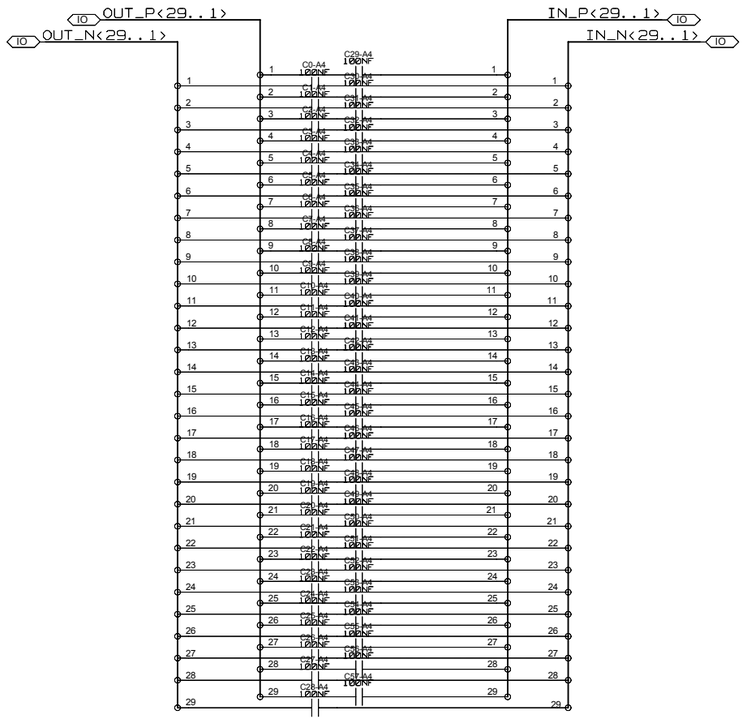

	NAME	DATE	SIGN
CHECKED	J. V.DE SOUZA		
CHECKED	U.SCHAEFER		
CHECKED	S.RAVE		
DRAWN	BAUSS		
BLOCK TITLE			

DRAWING TITLE

AC COUPLING 29BIT

UNIVERSITY OF MAINZ

SIZE C | REV. | DRAWING NO.

SCALE | SHEET OF

REVISIONS				
ZONE	LTR	DESCRIPTION	DATE	APPR.

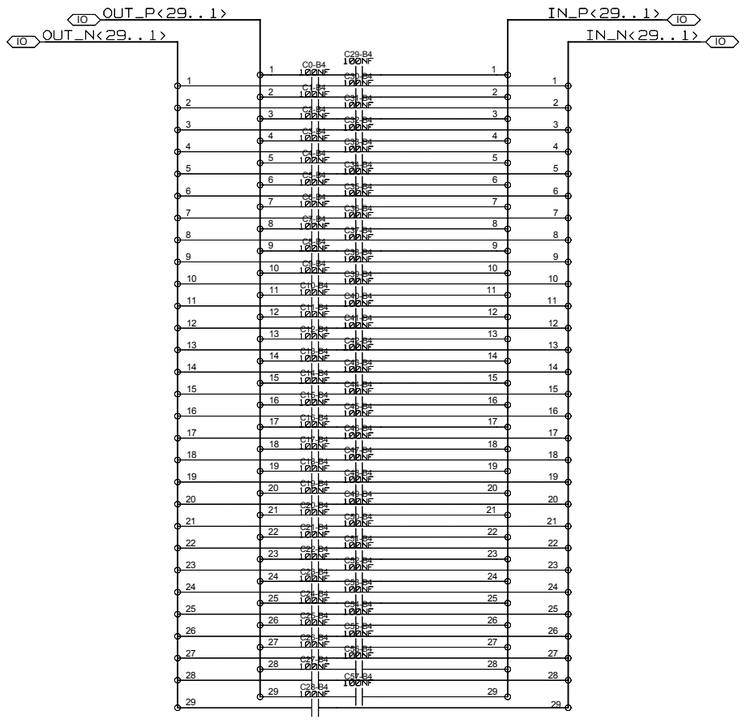

	NAME	DATE	SIGN
CHECKED	J. V.DE SOUZA		
CHECKED	U.SCHAEFER		
CHECKED	S.RAVE		
DRAWN	BAUSS		
BLOCK TITLE			

DRAWING TITLE

AC COUPLING 29BIT

UNIVERSITY OF MAINZ

SIZE C | REV. | DRAWING NO.

SCALE | SHEET OF

REVISIONS				
ZONE	LTR	DESCRIPTION	DATE	APPR.

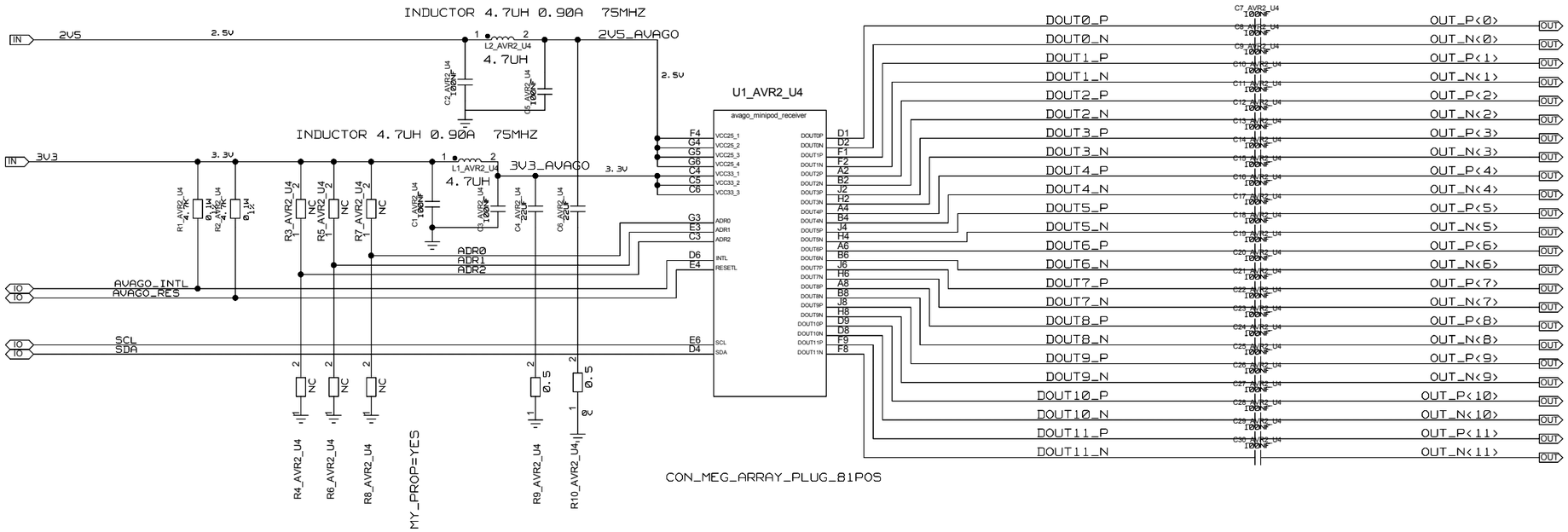

UNIVERSITY OF MAINZ	DRAWING TITLE: AVAGO RECEIVER		
	SIZE: C	REV.	DRAWING NO.
	SCALE		SHEET OF

REVISIONS				
ZONE	LTR	DESCRIPTION	DATE	APPR.

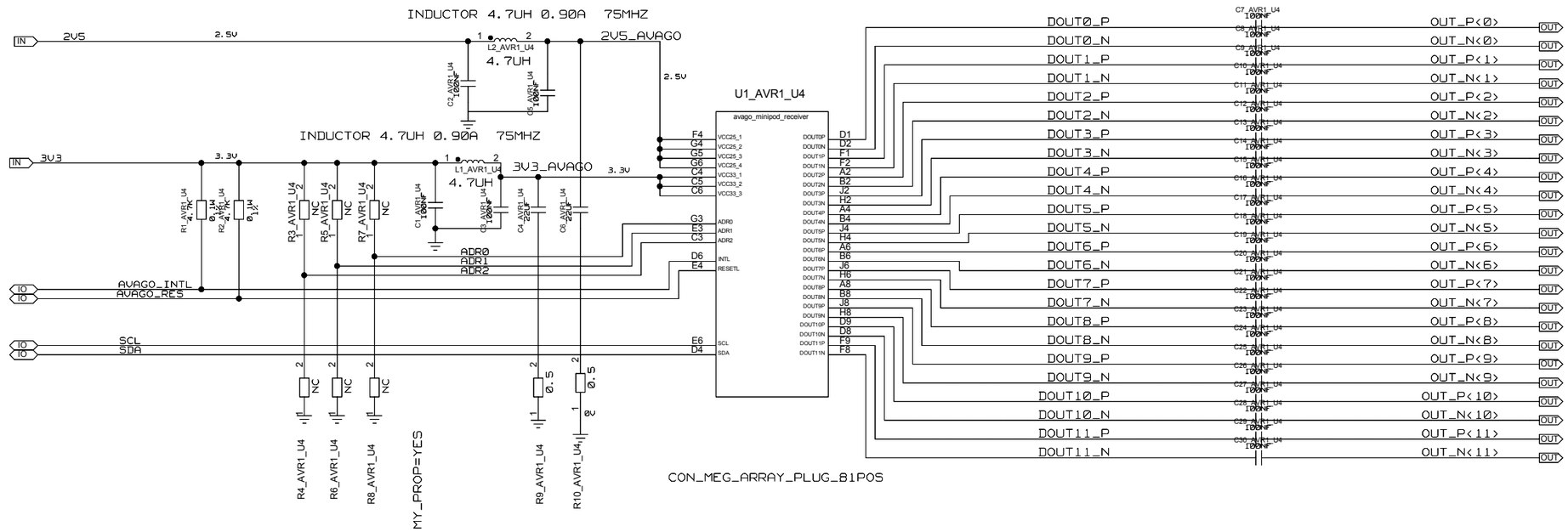

UNIVERSITY OF MAINZ	DRAWING TITLE: AVAGO RECEIVER		
	SIZE: C	REV.	DRAWING NO.
	SCALE		SHEET OF

REVISIONS				
ZONE	LTR	DESCRIPTION	DATE	APPR.

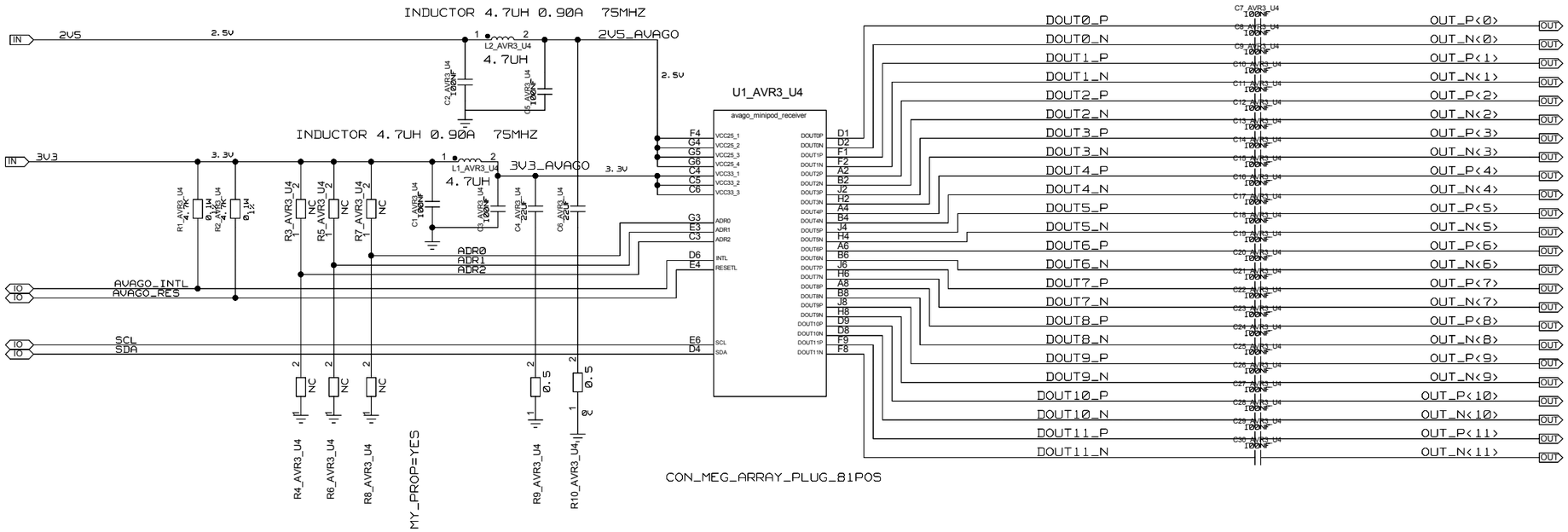

UNIVERSITY OF MAINZ	DRAWING TITLE: AVAGO RECEIVER		
	SIZE: C	REV.	DRAWING NO.
	SCALE		SHEET OF

REVISIONS				
ZONE	LTR	DESCRIPTION	DATE	APPR.

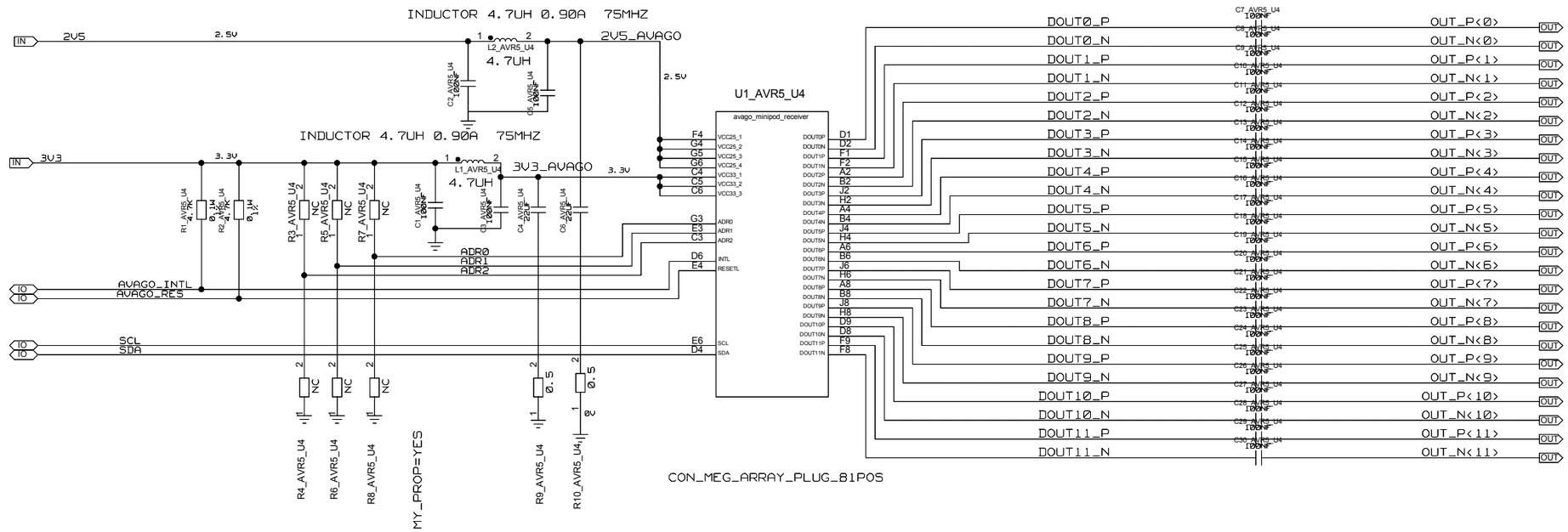

UNIVERSITY OF MAINZ	DRAWING TITLE: AVAGO RECEIVER		
	SIZE: C	REV.	DRAWING NO.
	SCALE		SHEET OF

REVISIONS				
ZONE	LTR	DESCRIPTION	DATE	APPR.

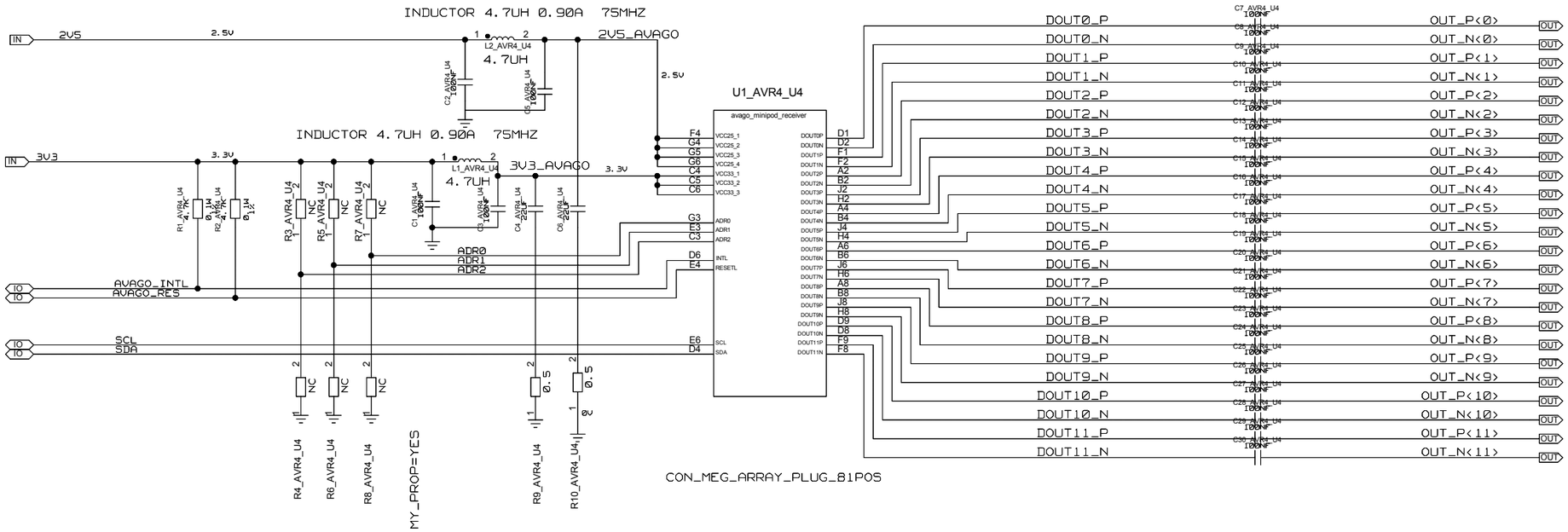

UNIVERSITY OF MAINZ	DRAWING TITLE: AVAGO RECEIVER		
	SIZE: C	REV.	DRAWING NO.
	SCALE		SHEET OF

REVISIONS				
ZONE	LTR	DESCRIPTION	DATE	APPR.

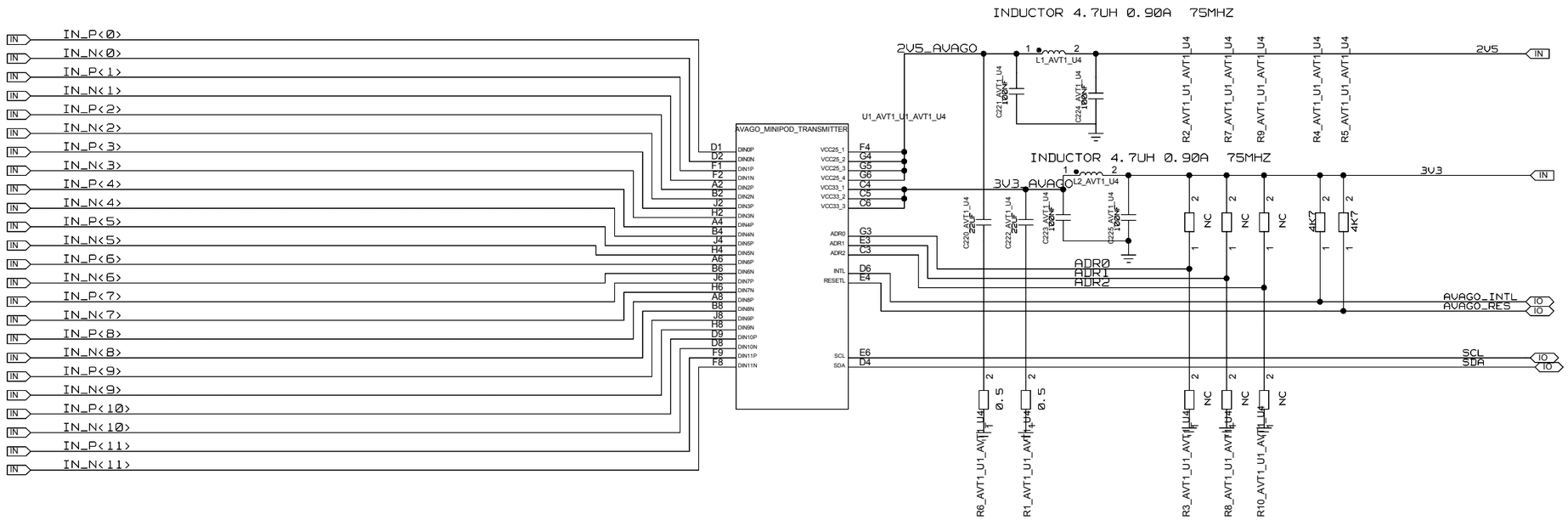

UNIVERSITY OF MAINZ	DRAWING TITLE: AVAGO TRANSMITTER		
	SIZE: C	REV.	DRAWING NO.
	SCALE		SHEET OF

REVISIONS				
ZONE	LTR	DESCRIPTION	DATE	APPR.

ATCA POWER IN & CTRL

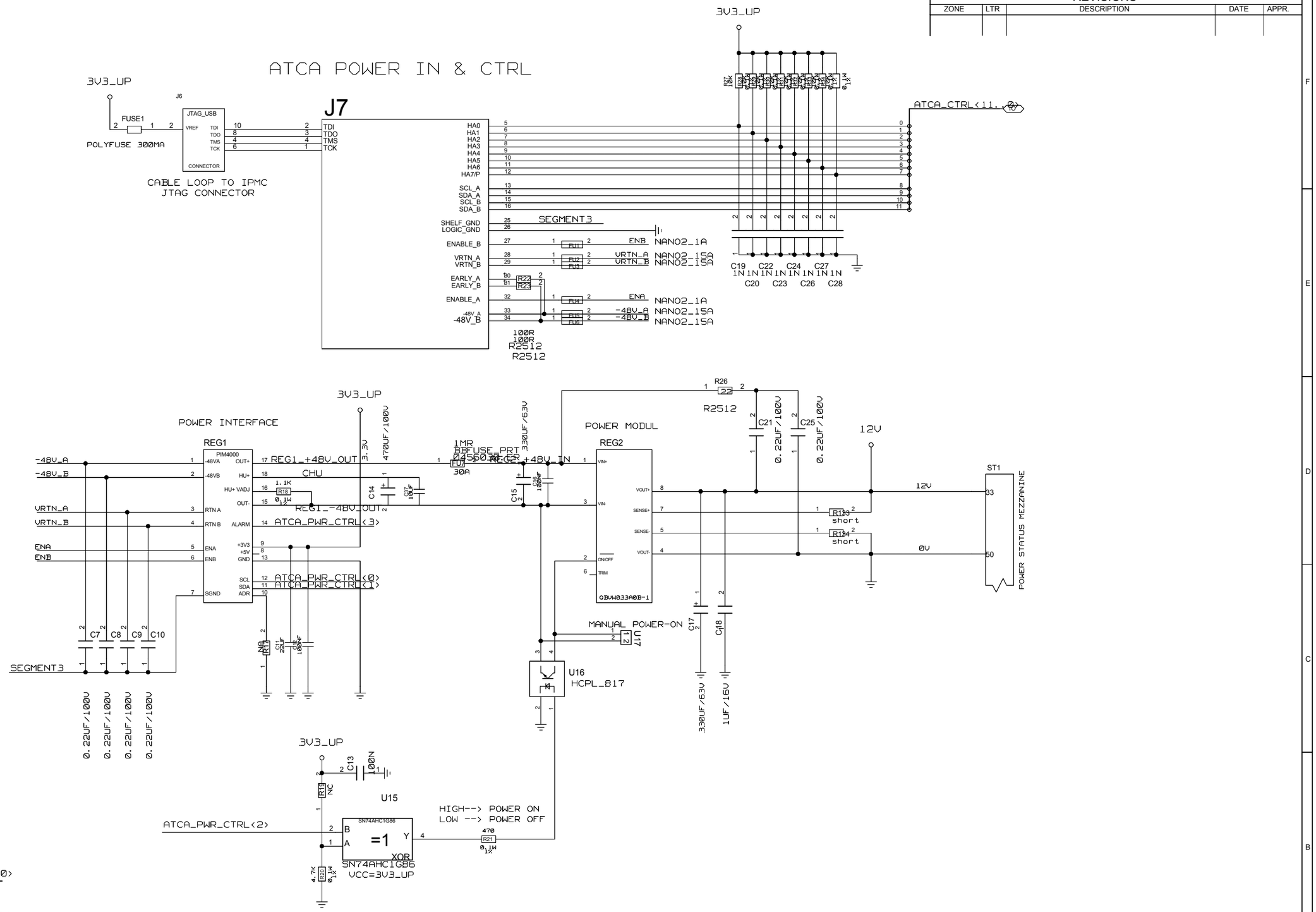

	NAME	DATE	SIGN
CHECKED	J. V.DE SOUZA		
CHECKED	U.SCHAEFER		
CHECKED	S.RAVE		
DRAWN	BAUSS	03.11.2015	

BLOCK TITLE: POWERSUPPLY

DRAWING TITLE: ATCA POWER_IN

UNIVERSITY OF MAINZ

SIZE: C | REV. | DRAWING NO.

SCALE | SHEET OF

REVISIONS				
ZONE	LTR	DESCRIPTION	DATE	APPR.

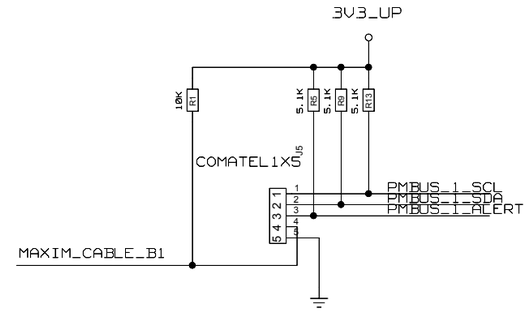

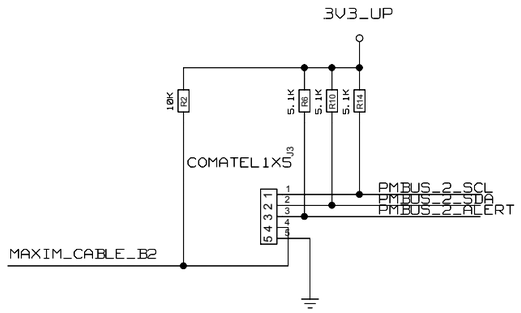

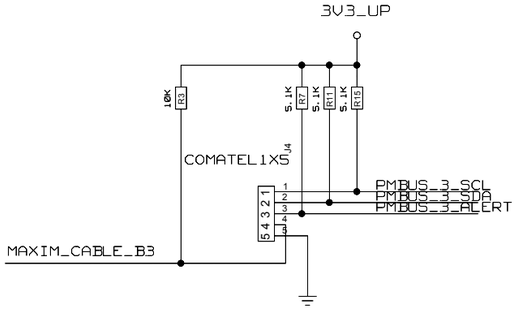

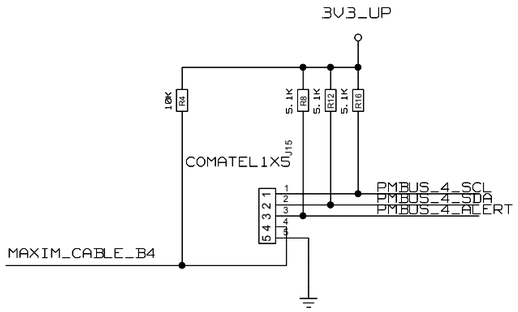

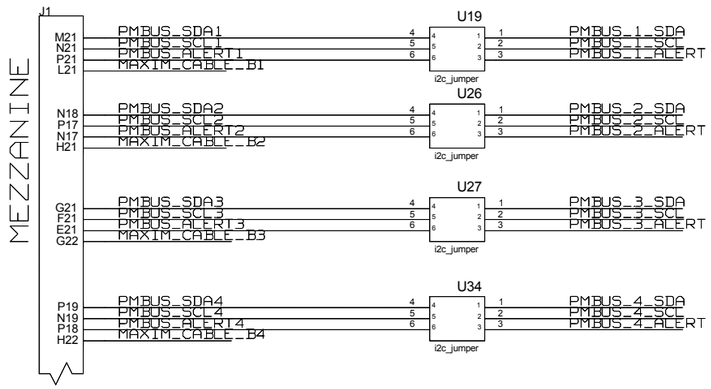

	NAME	DATE	SIGN
CHECKED	J. V.DE SOUZA		
CHECKED	U.SCHAEFER		
CHECKED	S.RAVE		
DRAWN	BAUSS		

BLOCK TITLE
POWERSUPPLY

DRAWING TITLE
PMBUS CONNECTORS

UNIVERSITY OF MAINZ

SIZE C | REV. | DRAWING NO.

SCALE | SHEET OF

REVISIONS				
ZONE	LTR	DESCRIPTION	DATE	APPR.

CPLD2

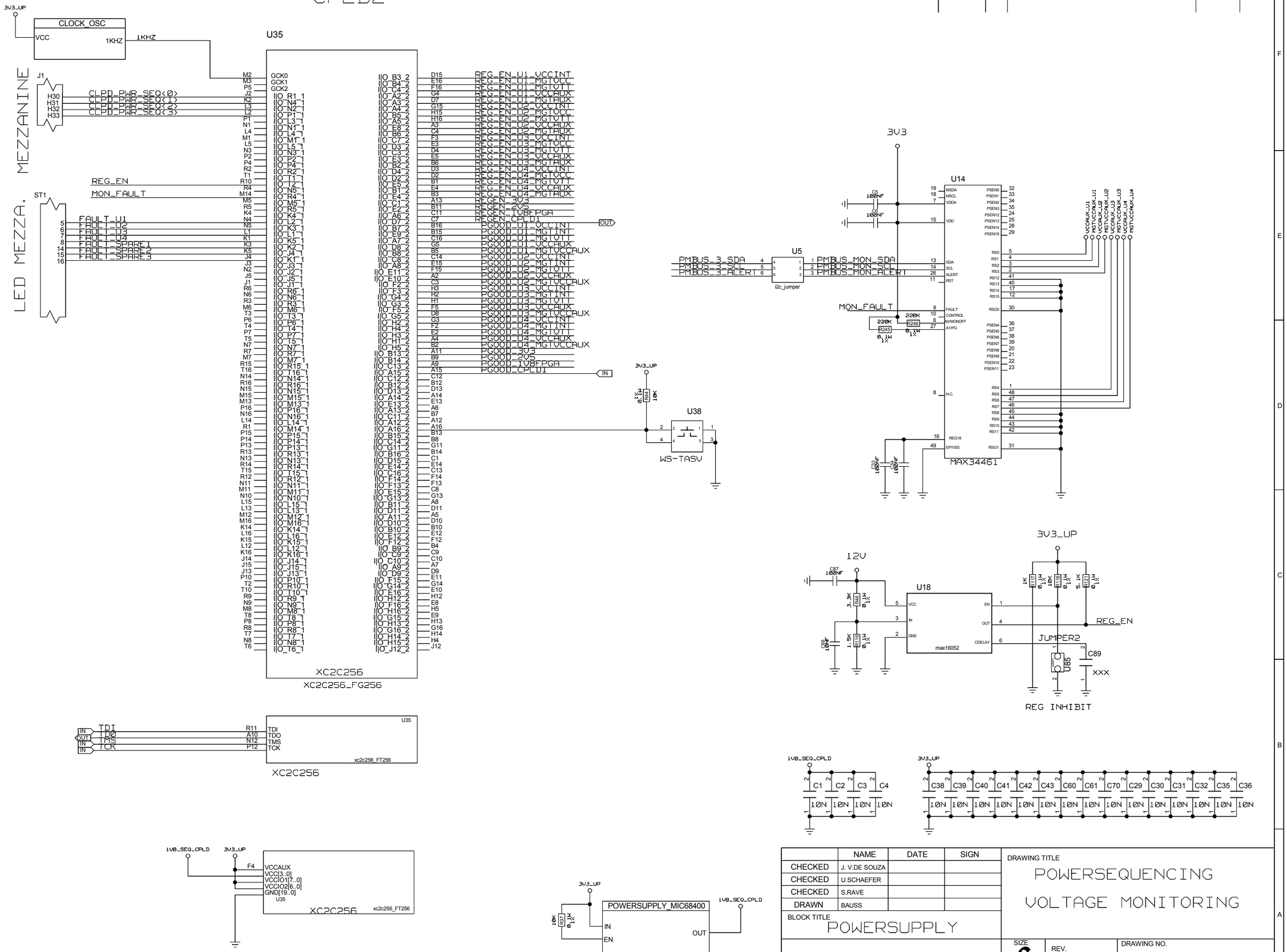

	NAME	DATE	SIGN
CHECKED	J. V.DE SOUZA		
CHECKED	U.SCHAEFER		
CHECKED	S.RAVE		
DRAWN	BAUSS		

BLOCK TITLE
POWERSUPPLY

DRAWING TITLE
POWERSEQUENCING
VOLTAGE MONITORING

UNIVERSITY OF MAINZ

SIZE C | REV. | DRAWING NO.

SCALE | SHEET OF

REVISIONS				
ZONE	LTR	DESCRIPTION	DATE	APPR.

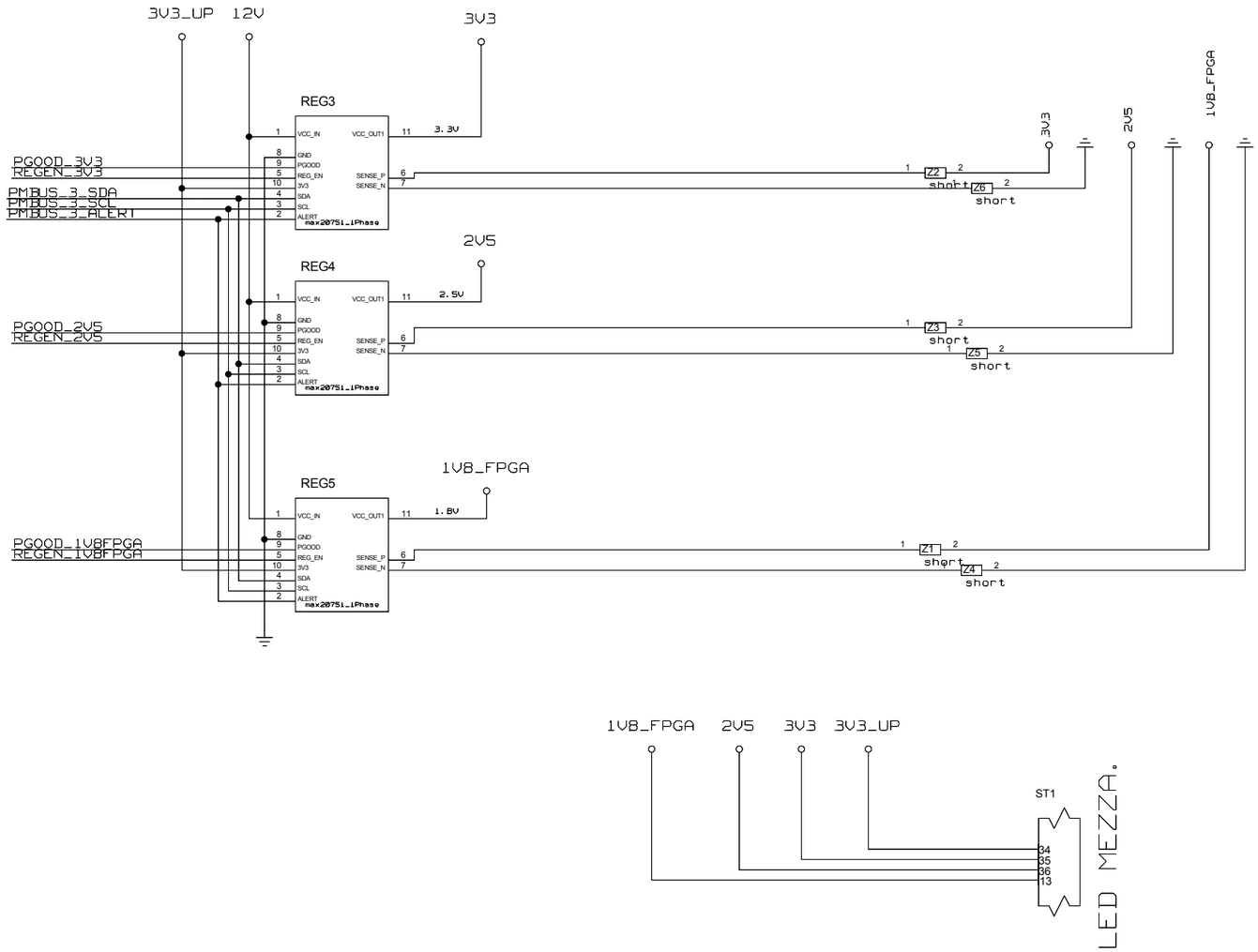

	NAME	DATE	SIGN
CHECKED	J. V.DE SOUZA		
CHECKED	U.SCHAEFER		
CHECKED	S.RAVE		
DRAWN	BAUSS		

BLOCK TITLE
POWERSUPPLY

DRAWING TITLE
BOARDLEVEL
1V8, 2V5, 3V3

UNIVERSITY OF MAINZ

SIZE C | REV. | DRAWING NO.

SCALE | SHEET OF

REVISIONS				
ZONE	LTR	DESCRIPTION	DATE	APPR.

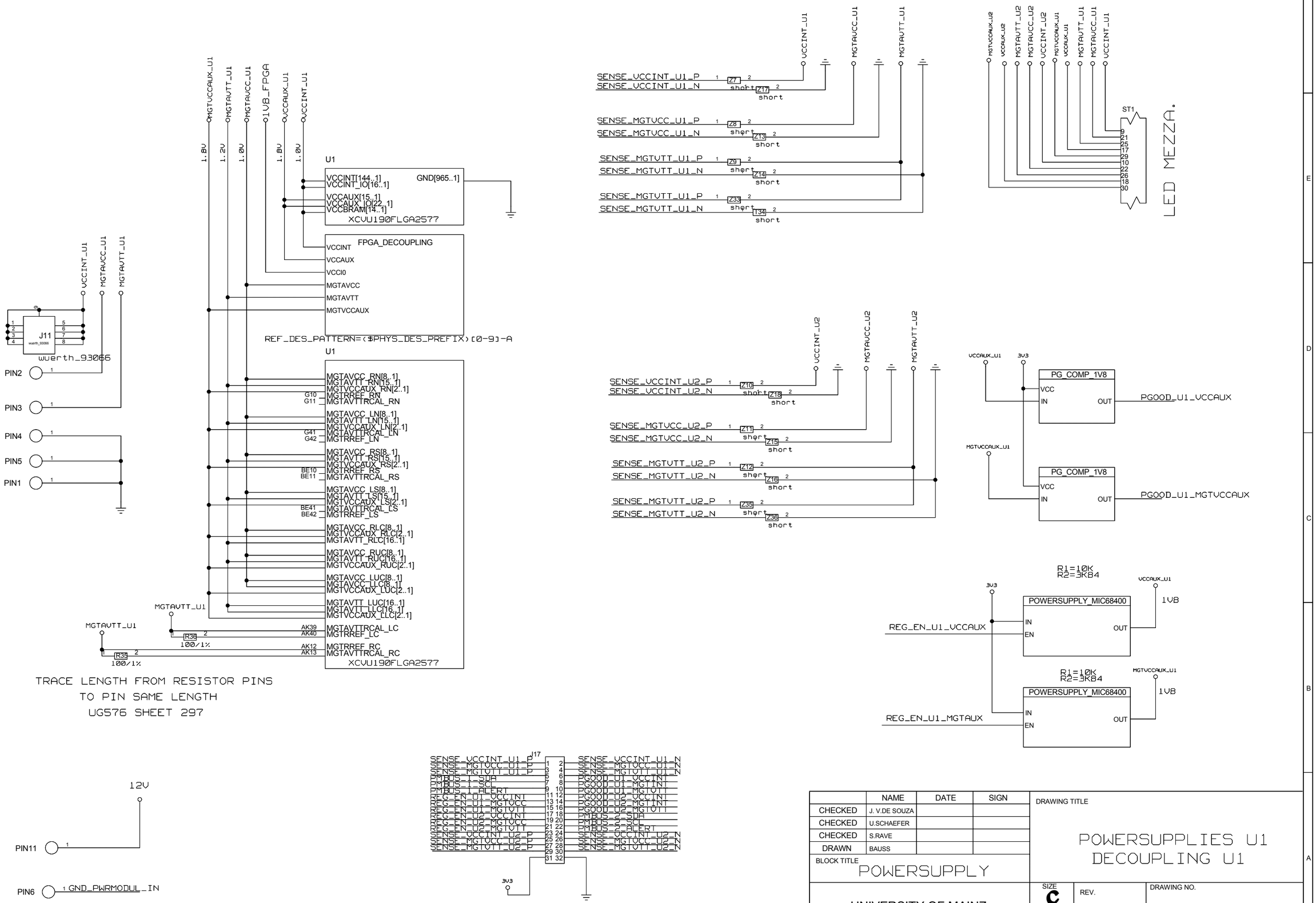

	NAME	DATE	SIGN
CHECKED	J. V.DE SOUZA		
CHECKED	U.SCHAEFER		
CHECKED	S.RAVE		
DRAWN	BAUSS		

BLOCK TITLE
POWERSUPPLY

DRAWING TITLE
POWERSUPPLIES U1
DECOUPLING U1

UNIVERSITY OF MAINZ

SIZE C | REV. | DRAWING NO.

SCALE | SHEET OF

REVISIONS				
ZONE	LTR	DESCRIPTION	DATE	APPR.

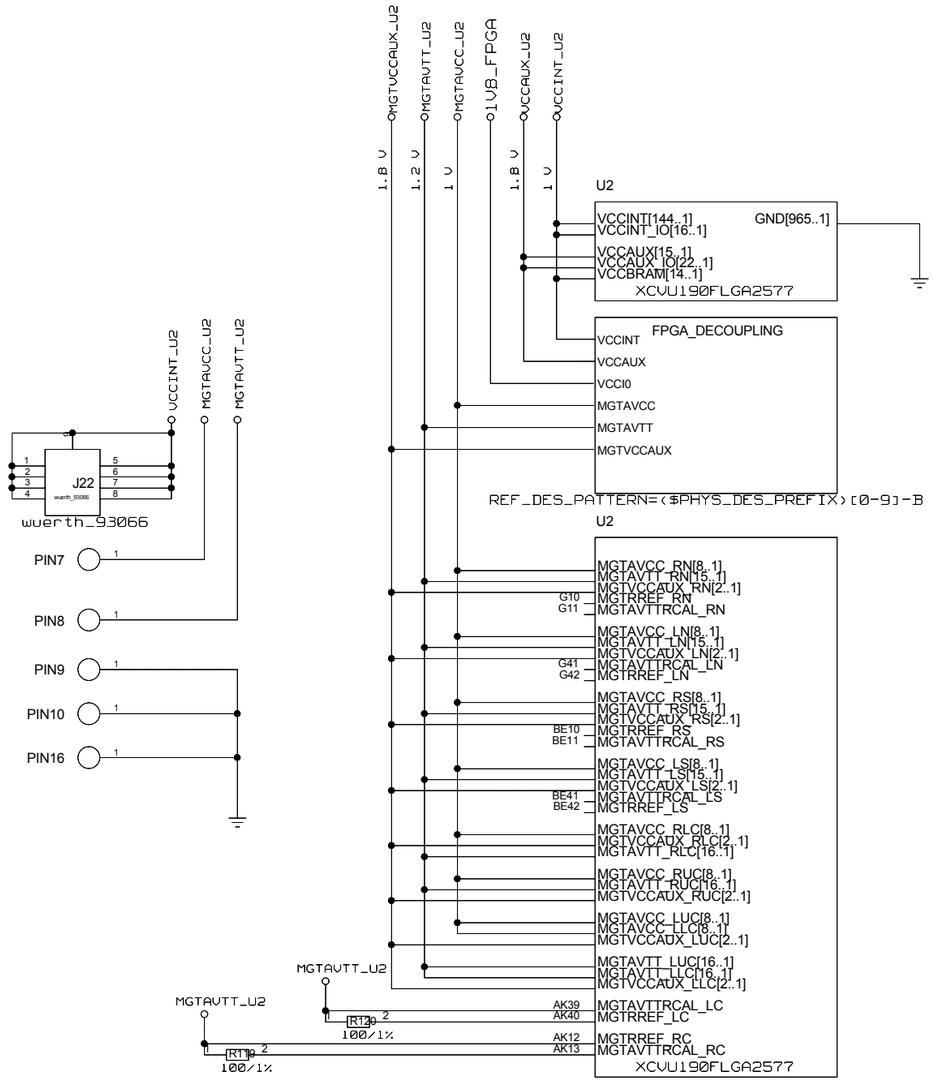

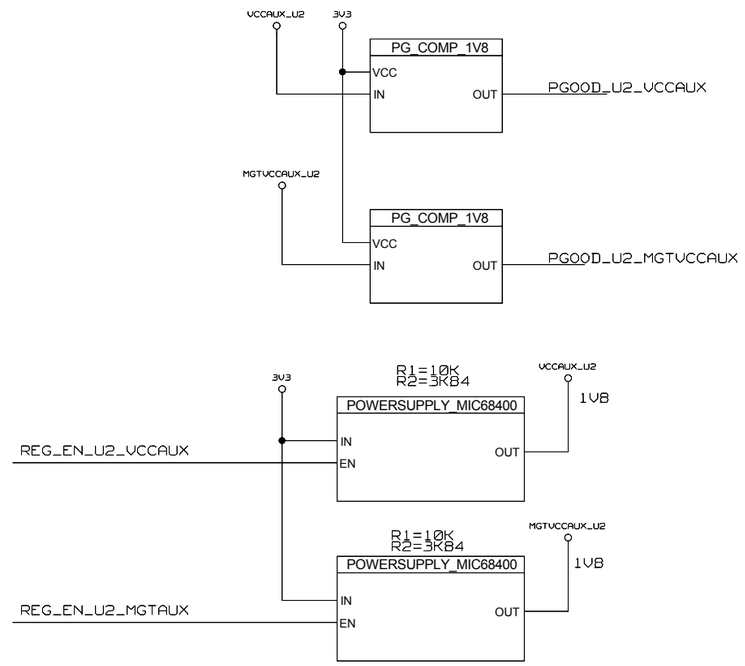

	NAME	DATE	SIGN
CHECKED	J. V.DE SOUZA		
CHECKED	U.SCHAEFER		
CHECKED	S.RAVE		
DRAWN	BAUSS		

BLOCK TITLE
POWERSUPPLY

DRAWING TITLE
POWERSUPPLIES U2
DECOUPLING U2

UNIVERSITY OF MAINZ

SIZE C | REV. | DRAWING NO.

SCALE | SHEET OF

REVISIONS				
ZONE	LTR	DESCRIPTION	DATE	APPR.

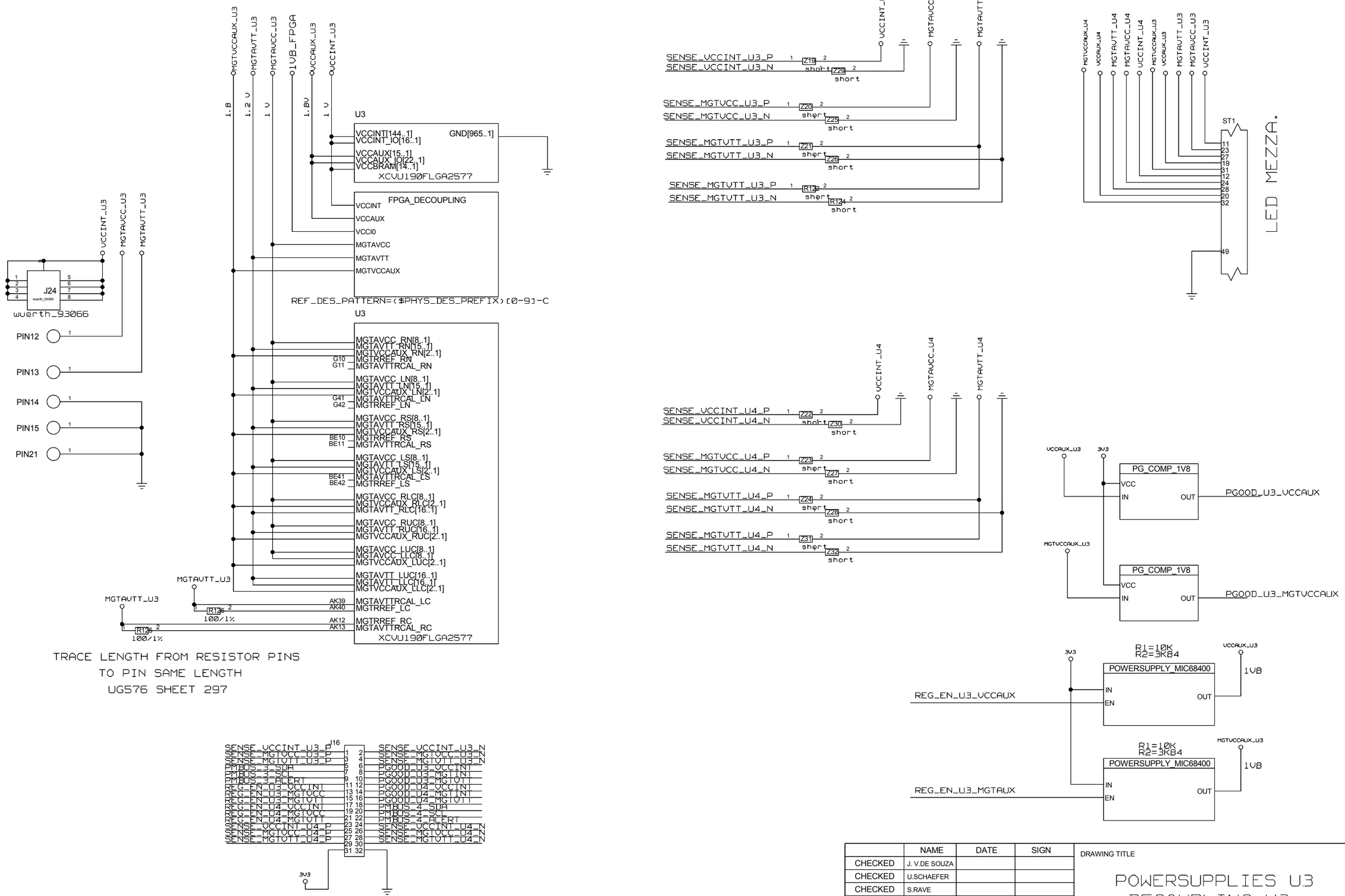

	NAME	DATE	SIGN
CHECKED	J. V.DE SOUZA		
CHECKED	U.SCHAEFER		
CHECKED	S.RAVE		
DRAWN	BAUSS		

BLOCK TITLE
POWERSUPPLY

DRAWING TITLE
POWERSUPPLIES U3
DECOUPLING U3

UNIVERSITY OF MAINZ

SIZE C | REV. | DRAWING NO.

SCALE | SHEET OF

REVISIONS				
ZONE	LTR	DESCRIPTION	DATE	APPR.

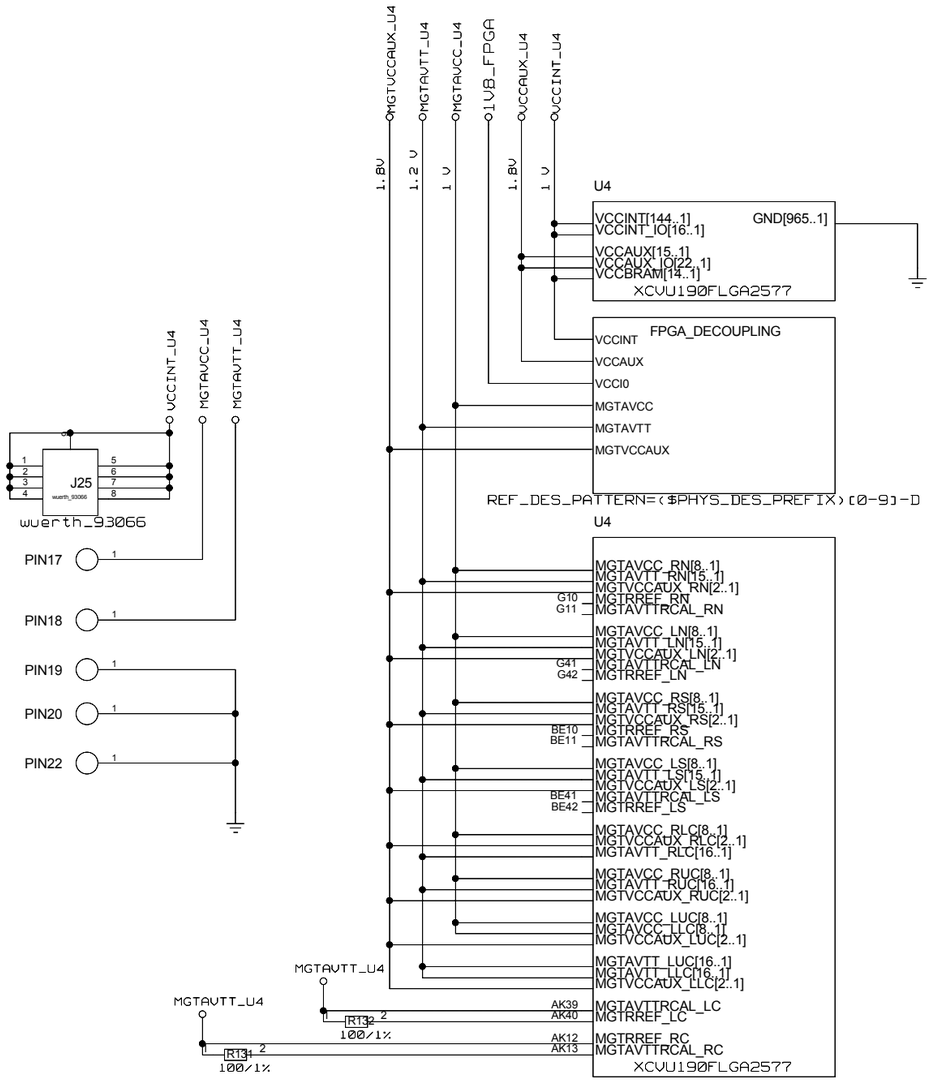

TRACE LENGTH FROM RESISTOR PINS
TO PIN SAME LENGTH
UG576 SHEET 297

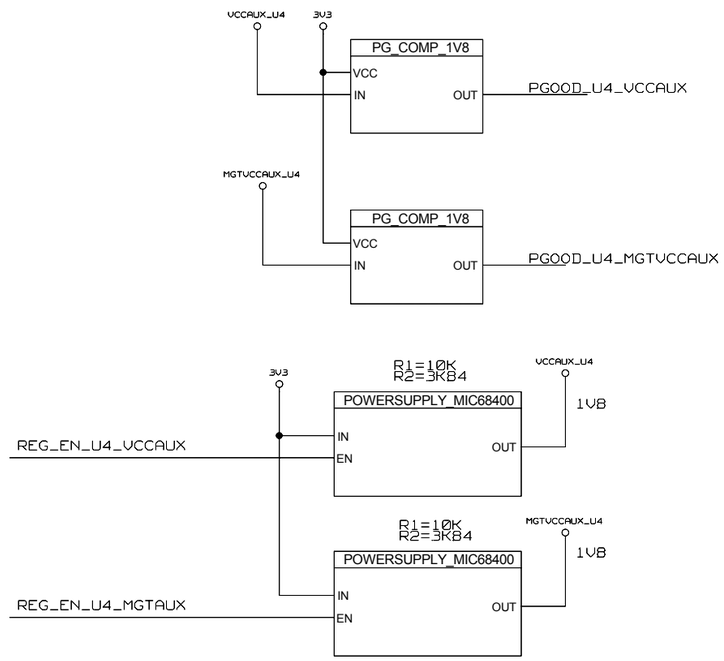

	NAME	DATE	SIGN
CHECKED	J. V.DE SOUZA		
CHECKED	U.SCHAEFER		
CHECKED	S.RAVE		
DRAWN	BAUSS		
BLOCK TITLE	POWERSUPPLY		

DRAWING TITLE

POWERSUPPLIES U4
DECOUPLING U4

UNIVERSITY OF MAINZ

SIZE C | REV. | DRAWING NO.

SCALE | SHEET OF

REVISIONS				
ZONE	LTR	DESCRIPTION	DATE	APPR.

	NAME	DATE	SIGN
CHECKED	J. V.DE SOUZA		
CHECKED	U.SCHAEFER		
CHECKED	S.RAVE		
DRAWN	BAUSS		

BLOCK TITLE

DRAWING TITLE

UNIVERSITY OF MAINZ

SIZE C

REV.

DRAWING NO.

SCALE

SHEET OF

REVISIONS				
ZONE	LTR	DESCRIPTION	DATE	APPR.

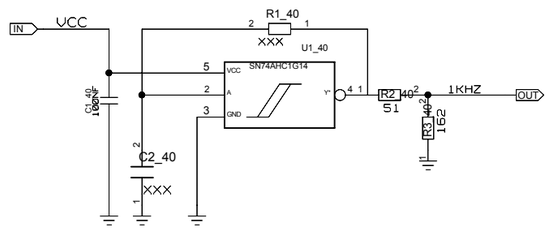

	NAME	DATE	SIGN
CHECKED	J. V.DE SOUZA		
CHECKED	U.SCHAEFER		
CHECKED	S.RAVE		
DRAWN	BAUSS		
BLOCK TITLE			

DRAWING TITLE

UNIVERSITY OF MAINZ

SIZE C | REV. | DRAWING NO.

SCALE | SHEET OF

REVISIONS				
ZONE	LTR	DESCRIPTION	DATE	APPR.

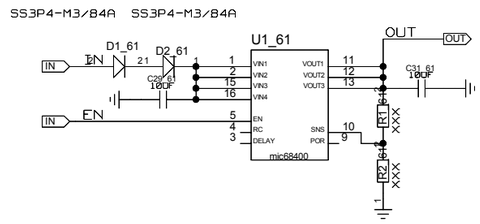

	NAME	DATE	SIGN
CHECKED	J. V.DE SOUZA		
CHECKED	U.SCHAEFER		
CHECKED	S.RAVE		
DRAWN	BAUSS		

BLOCK TITLE
POWERSUPPLY_MIC68400

DRAWING TITLE

UNIVERSITY OF MAINZ

SIZE C | REV. | DRAWING NO.

SCALE | SHEET OF

REVISIONS				
ZONE	LTR	DESCRIPTION	DATE	APPR.

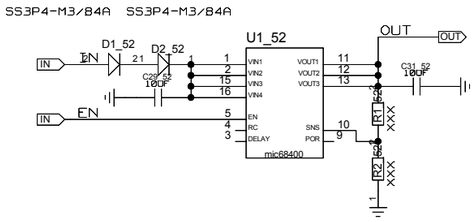

	NAME	DATE	SIGN
CHECKED	J. V.DE SOUZA		
CHECKED	U.SCHAEFER		
CHECKED	S.RAVE		
DRAWN	BAUSS		

BLOCK TITLE
POWERSUPPLY_MIC68400

DRAWING TITLE

UNIVERSITY OF MAINZ

SIZE C | REV. | DRAWING NO.

SCALE | SHEET OF

REVISIONS				
ZONE	LTR	DESCRIPTION	DATE	APPR.

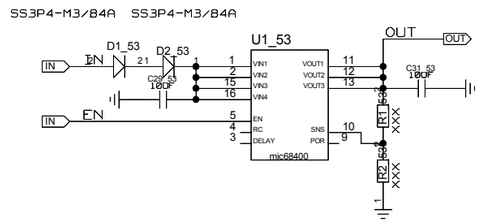

	NAME	DATE	SIGN
CHECKED	J. V.DE SOUZA		
CHECKED	U.SCHAEFER		
CHECKED	S.RAVE		
DRAWN	BAUSS		

BLOCK TITLE
POWERSUPPLY_MIC68400

DRAWING TITLE

UNIVERSITY OF MAINZ

SIZE C | REV. | DRAWING NO.

SCALE | SHEET OF

REVISIONS				
ZONE	LTR	DESCRIPTION	DATE	APPR.

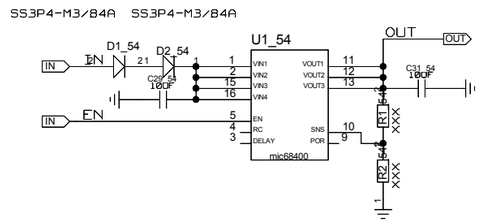

	NAME	DATE	SIGN
CHECKED	J. V.DE SOUZA		
CHECKED	U.SCHAEFER		
CHECKED	S.RAVE		
DRAWN	BAUSS		

BLOCK TITLE
POWERSUPPLY_MIC68400

DRAWING TITLE

UNIVERSITY OF MAINZ

SIZE C | REV. | DRAWING NO.

SCALE | SHEET OF

REVISIONS				
ZONE	LTR	DESCRIPTION	DATE	APPR.

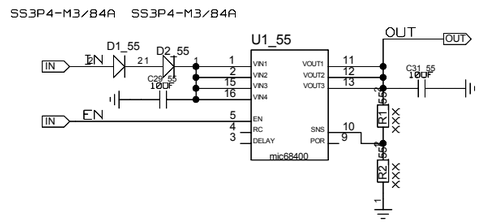

	NAME	DATE	SIGN
CHECKED	J. V.DE SOUZA		
CHECKED	U.SCHAEFER		
CHECKED	S.RAVE		
DRAWN	BAUSS		

BLOCK TITLE
POWERSUPPLY_MIC68400

DRAWING TITLE

UNIVERSITY OF MAINZ

SIZE C | REV. | DRAWING NO.

SCALE | SHEET OF

REVISIONS				
ZONE	LTR	DESCRIPTION	DATE	APPR.

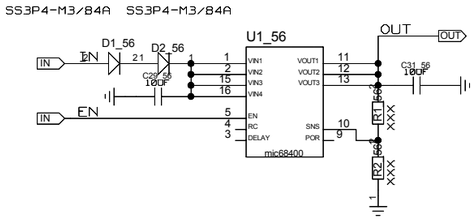

	NAME	DATE	SIGN
CHECKED	J. V.DE SOUZA		
CHECKED	U.SCHAEFER		
CHECKED	S.RAVE		
DRAWN	BAUSS		

BLOCK TITLE
POWERSUPPLY_MIC68400

DRAWING TITLE

UNIVERSITY OF MAINZ

SIZE C | REV. | DRAWING NO.

SCALE | SHEET OF

REVISIONS				
ZONE	LTR	DESCRIPTION	DATE	APPR.

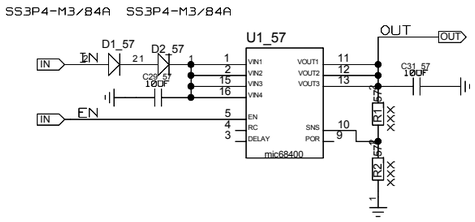

	NAME	DATE	SIGN
CHECKED	J. V.DE SOUZA		
CHECKED	U.SCHAEFER		
CHECKED	S.RAVE		
DRAWN	BAUSS		

BLOCK TITLE
POWERSUPPLY_MIC68400

DRAWING TITLE

UNIVERSITY OF MAINZ

SIZE C | REV. | DRAWING NO.

SCALE | SHEET OF

REVISIONS				
ZONE	LTR	DESCRIPTION	DATE	APPR.

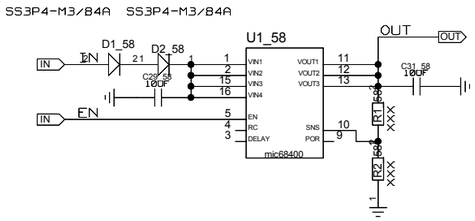

	NAME	DATE	SIGN
CHECKED	J. V.DE SOUZA		
CHECKED	U.SCHAEFER		
CHECKED	S.RAVE		
DRAWN	BAUSS		

BLOCK TITLE
POWERSUPPLY_MIC68400

DRAWING TITLE

UNIVERSITY OF MAINZ

SIZE C | REV. | DRAWING NO.

SCALE | SHEET OF

REVISIONS				
ZONE	LTR	DESCRIPTION	DATE	APPR.

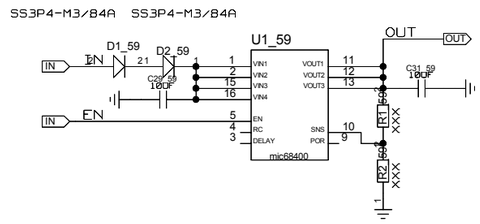

	NAME	DATE	SIGN
CHECKED	J. V.DE SOUZA		
CHECKED	U.SCHAEFER		
CHECKED	S.RAVE		
DRAWN	BAUSS		

BLOCK TITLE
POWERSUPPLY_MIC68400

DRAWING TITLE

UNIVERSITY OF MAINZ

SIZE C | REV. | DRAWING NO.

SCALE | SHEET OF

REVISIONS				
ZONE	LTR	DESCRIPTION	DATE	APPR.

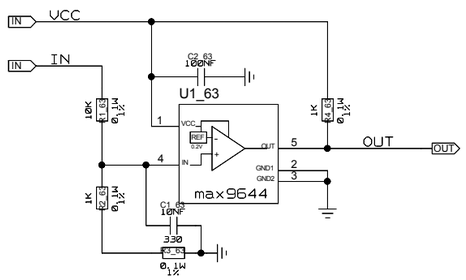

	NAME	DATE	SIGN
CHECKED	J. V.DE SOUZA		
CHECKED	U.SCHAEFER		
CHECKED	S.RAVE		
DRAWN	BAUSS		

BLOCK TITLE

DRAWING TITLE

UNIVERSITY OF MAINZ

SIZE C | REV. | DRAWING NO.

SCALE | SHEET OF

REVISIONS				
ZONE	LTR	DESCRIPTION	DATE	APPR.

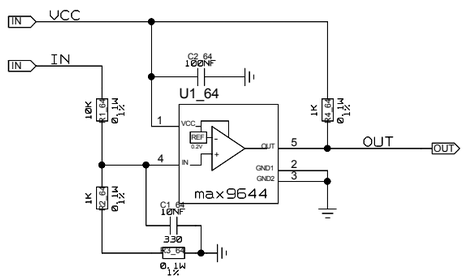

	NAME	DATE	SIGN
CHECKED	J. V.DE SOUZA		
CHECKED	U.SCHAEFER		
CHECKED	S.RAVE		
DRAWN	BAUSS		

BLOCK TITLE

DRAWING TITLE

UNIVERSITY OF MAINZ

SIZE C | REV. | DRAWING NO.

SCALE | SHEET OF

REVISIONS				
ZONE	LTR	DESCRIPTION	DATE	APPR.

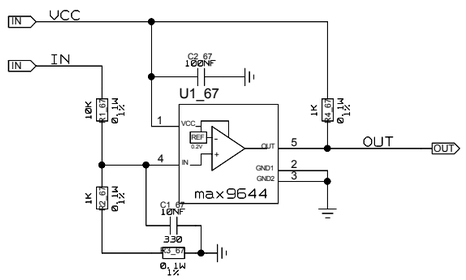

	NAME	DATE	SIGN
CHECKED	J. V.DE SOUZA		
CHECKED	U.SCHAEFER		
CHECKED	S.RAVE		
DRAWN	BAUSS		

BLOCK TITLE

DRAWING TITLE

UNIVERSITY OF MAINZ

SIZE C | REV. | DRAWING NO.

SCALE | SHEET OF

REVISIONS				
ZONE	LTR	DESCRIPTION	DATE	APPR.

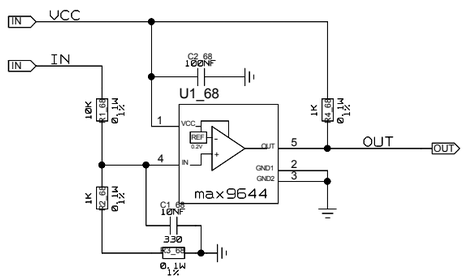

	NAME	DATE	SIGN
CHECKED	J. V.DE SOUZA		
CHECKED	U.SCHAEFER		
CHECKED	S.RAVE		
DRAWN	BAUSS		

BLOCK TITLE

DRAWING TITLE

UNIVERSITY OF MAINZ

SIZE C | REV. | DRAWING NO.

SCALE | SHEET OF

REVISIONS				
ZONE	LTR	DESCRIPTION	DATE	APPR.

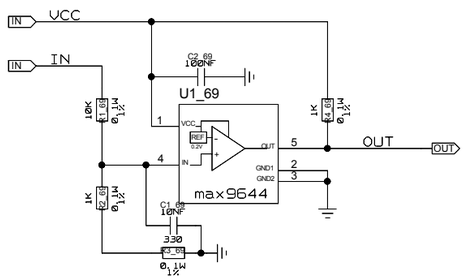

	NAME	DATE	SIGN
CHECKED	J. V.DE SOUZA		
CHECKED	U.SCHAEFER		
CHECKED	S.RAVE		
DRAWN	BAUSS		
BLOCK TITLE			

DRAWING TITLE

UNIVERSITY OF MAINZ

SIZE C | REV. | DRAWING NO.

SCALE | SHEET OF

REVISIONS				
ZONE	LTR	DESCRIPTION	DATE	APPR.

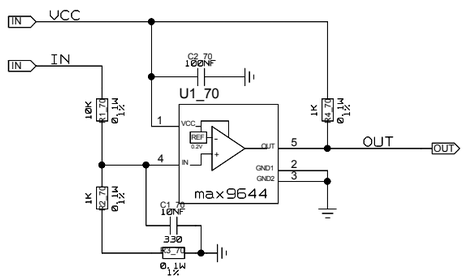

	NAME	DATE	SIGN
CHECKED	J. V.DE SOUZA		
CHECKED	U.SCHAEFER		
CHECKED	S.RAVE		
DRAWN	BAUSS		
BLOCK TITLE			

DRAWING TITLE

UNIVERSITY OF MAINZ

SIZE C | REV. | DRAWING NO.

SCALE | SHEET OF

REVISIONS				
ZONE	LTR	DESCRIPTION	DATE	APPR.

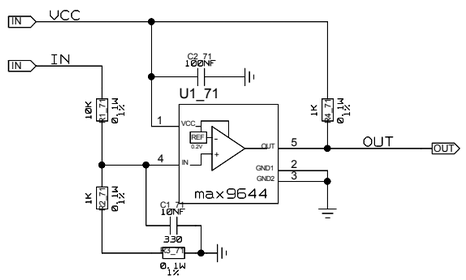

	NAME	DATE	SIGN
CHECKED	J. V.DE SOUZA		
CHECKED	U.SCHAEFER		
CHECKED	S.RAVE		
DRAWN	BAUSS		

BLOCK TITLE

DRAWING TITLE

UNIVERSITY OF MAINZ

SIZE C | REV. | DRAWING NO.

SCALE | SHEET OF

REVISIONS				
ZONE	LTR	DESCRIPTION	DATE	APPR.

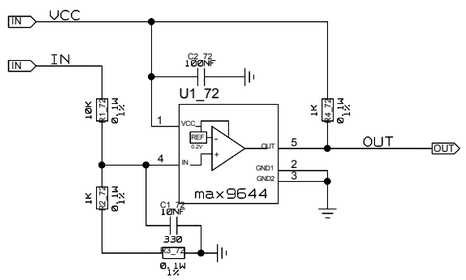

	NAME	DATE	SIGN
CHECKED	J. V.DE SOUZA		
CHECKED	U.SCHAEFER		
CHECKED	S.RAVE		
DRAWN	BAUSS		

BLOCK TITLE

DRAWING TITLE

UNIVERSITY OF MAINZ

SIZE C | REV. | DRAWING NO.

SCALE | SHEET OF

REVISIONS				
ZONE	LTR	DESCRIPTION	DATE	APPR.

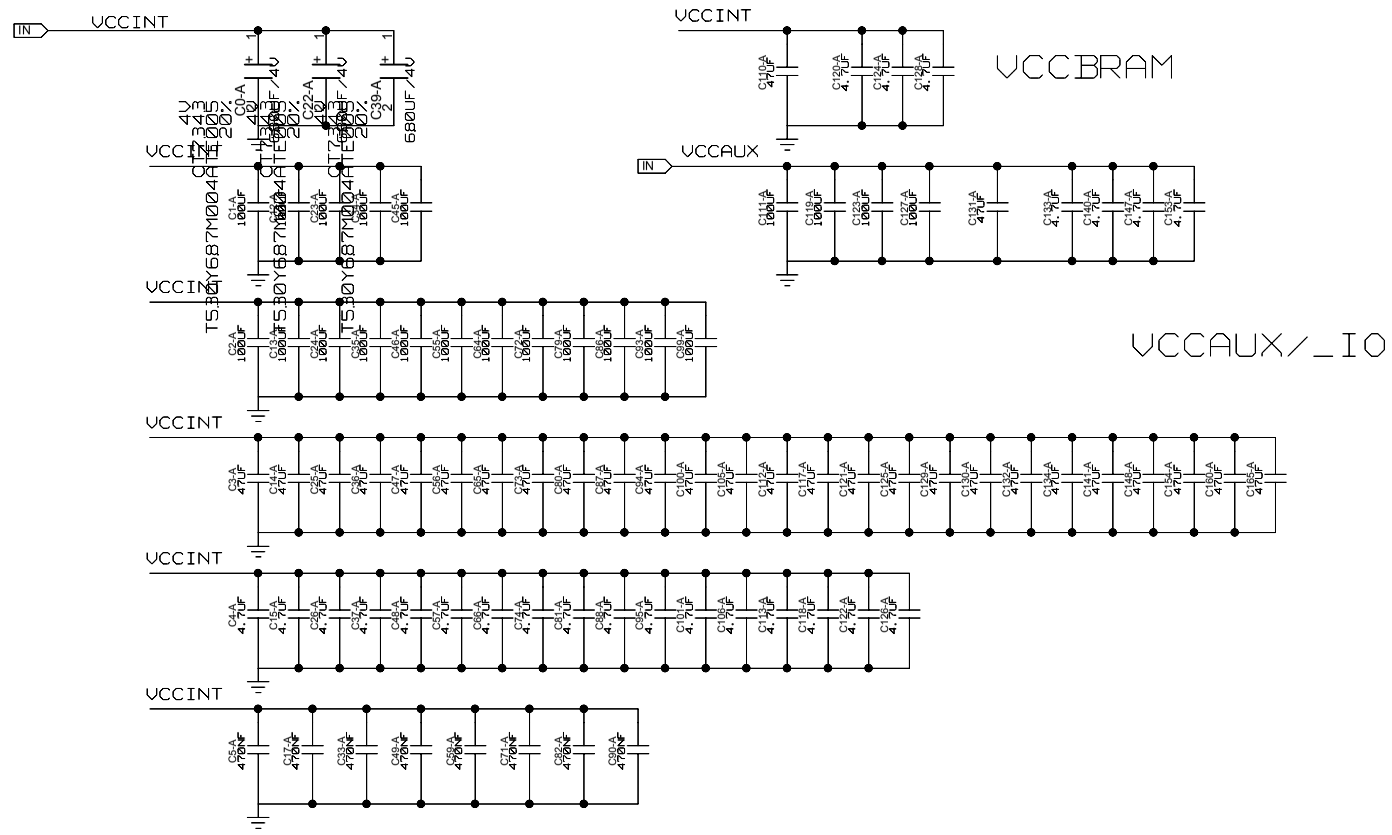

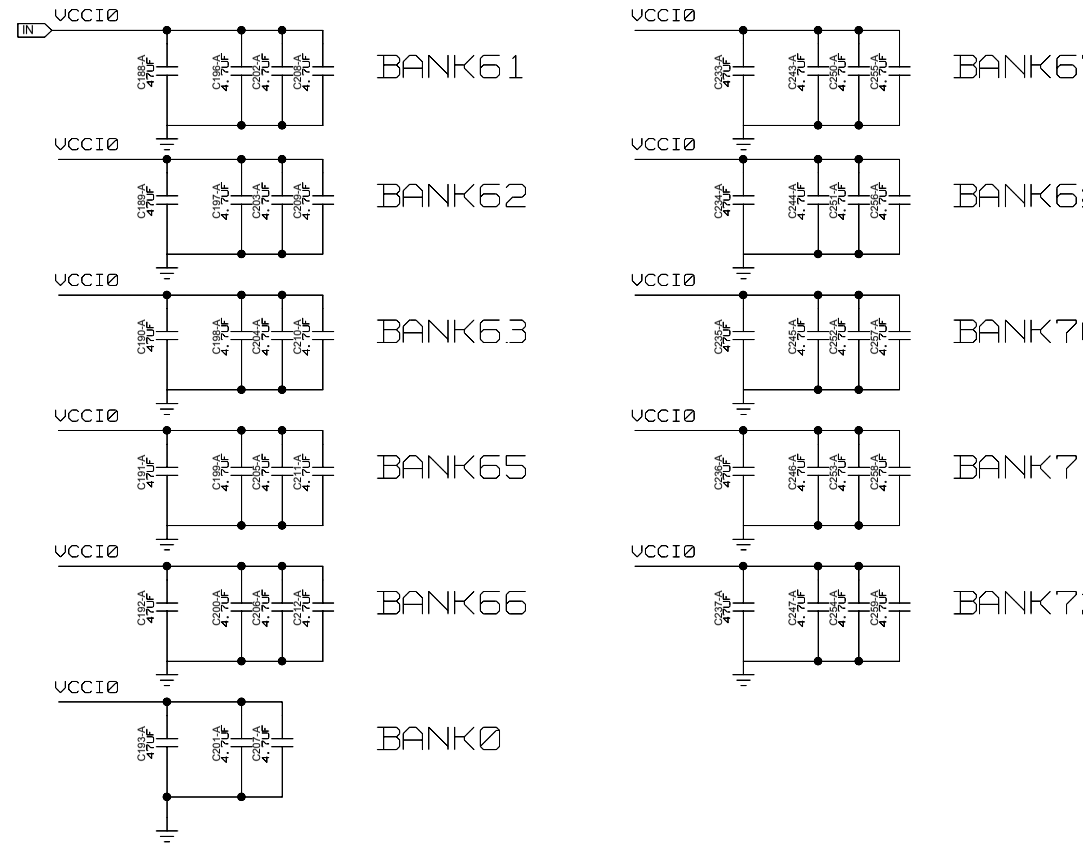

MGT DECOUPLING

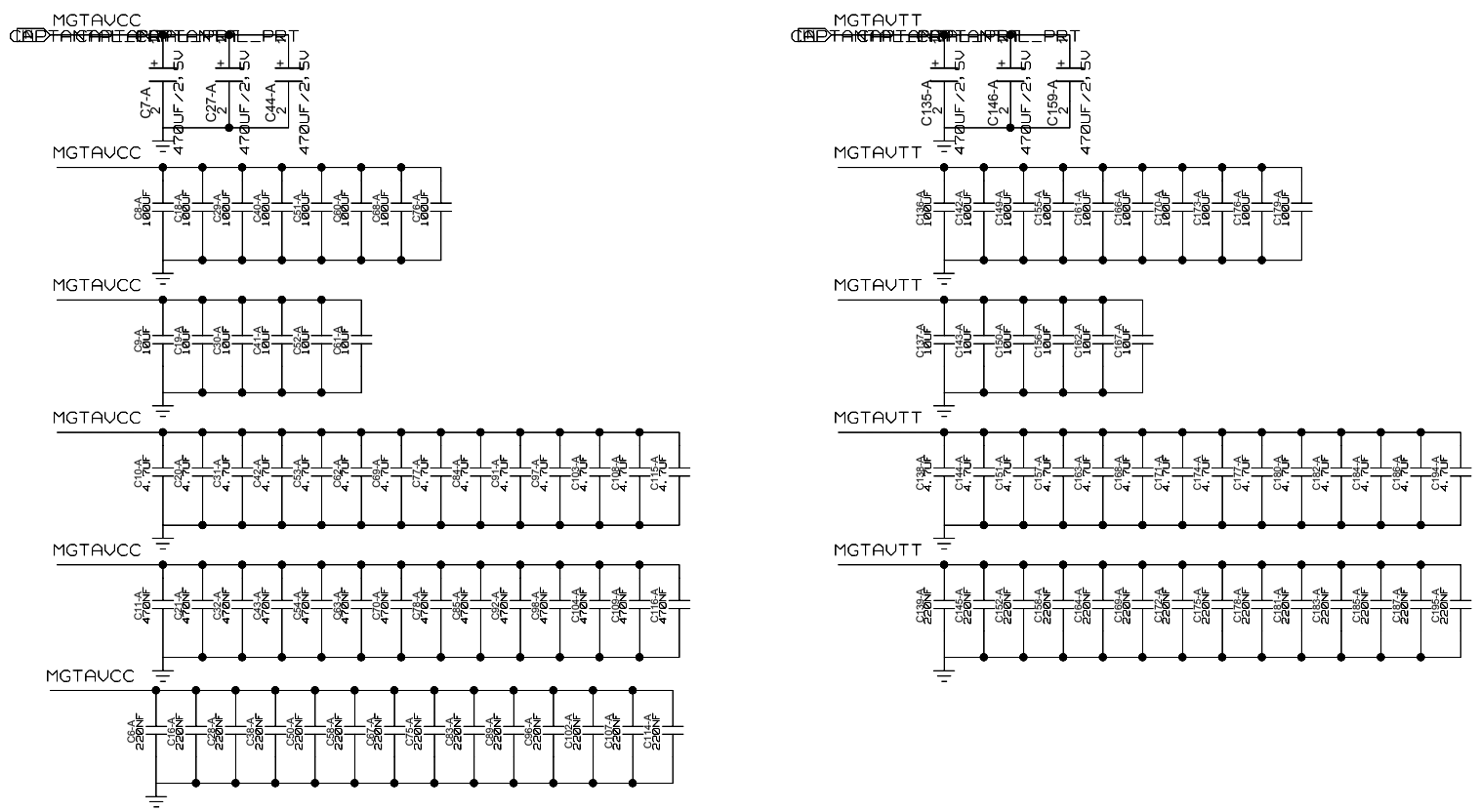

	NAME	DATE	SIGN
CHECKED	J. V.DE SOUZA		
CHECKED	U.SCHAEFER		
CHECKED	S.RAVE		
DRAWN	BAUSS		
BLOCK TITLE			

DRAWING TITLE

UNIVERSITY OF MAINZ

SIZE C | REV. | DRAWING NO.

SCALE | SHEET OF

REVISIONS				
ZONE	LTR	DESCRIPTION	DATE	APPR.

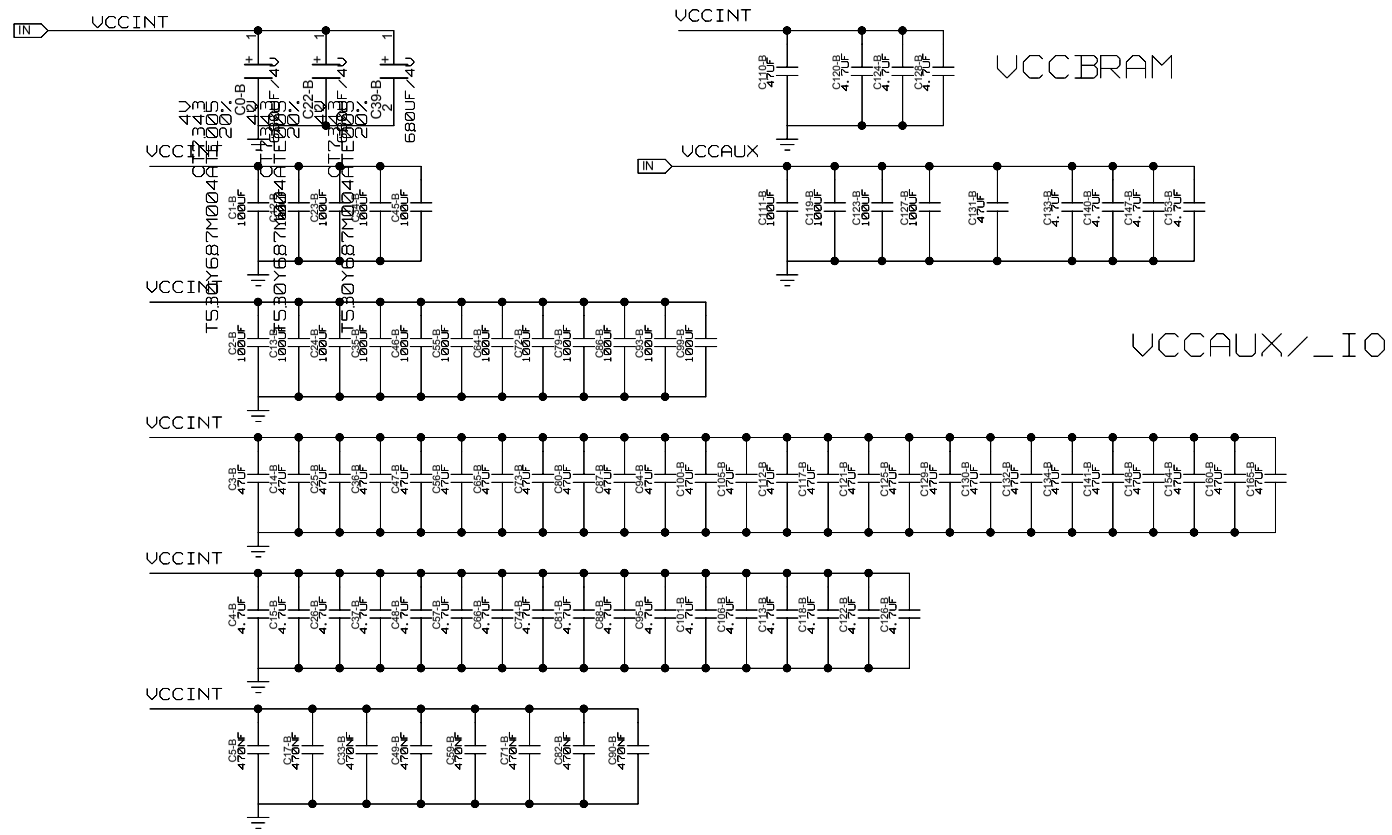

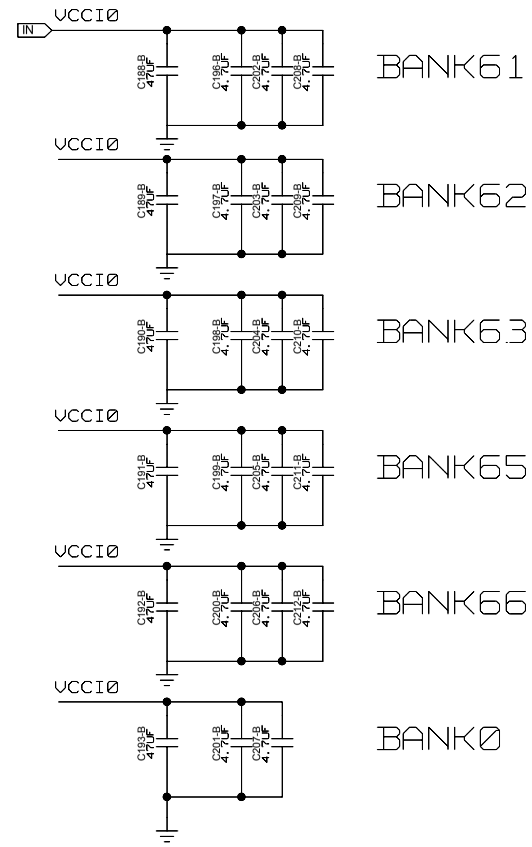

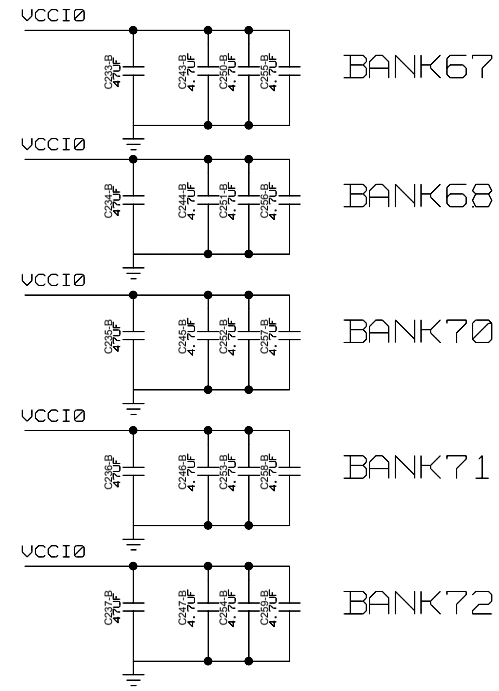

MGT DECOUPLING

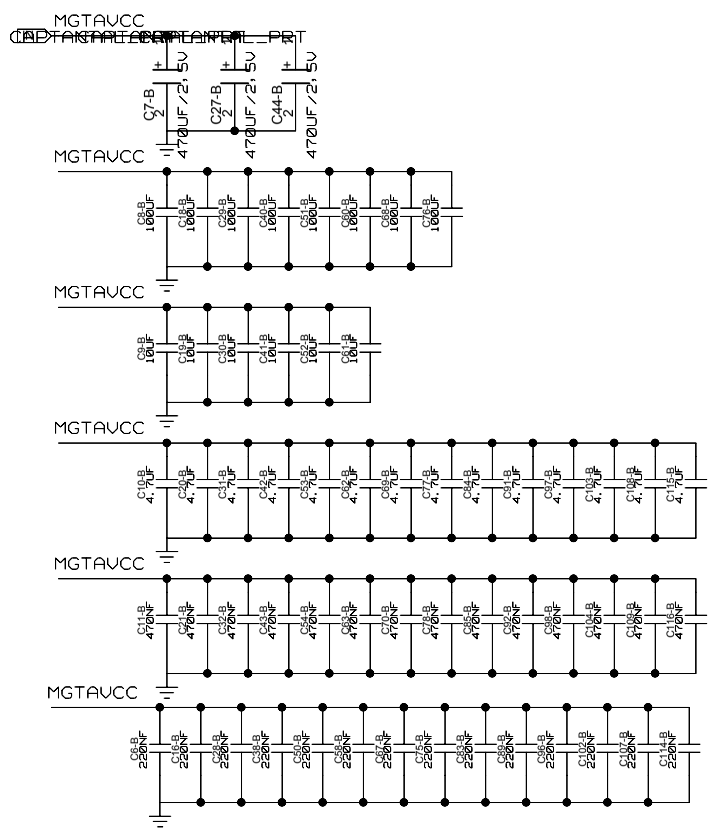

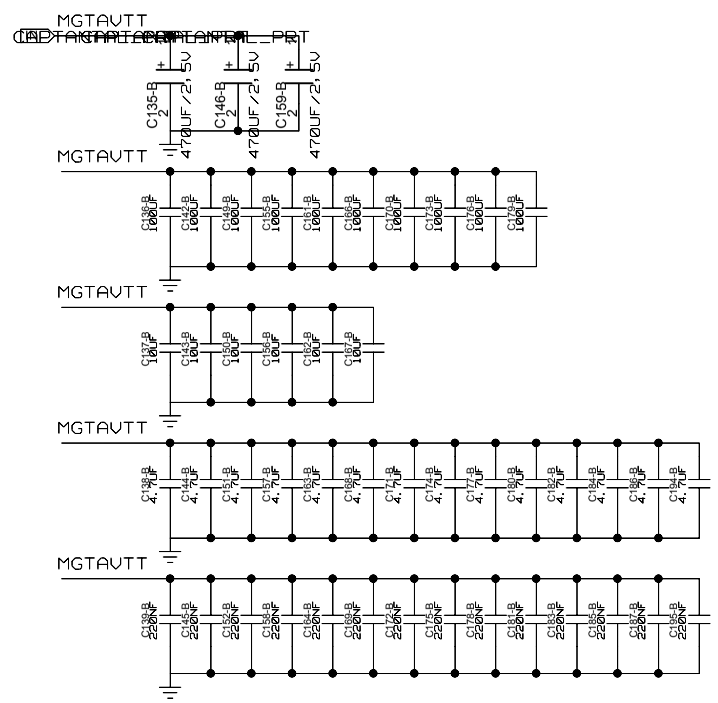

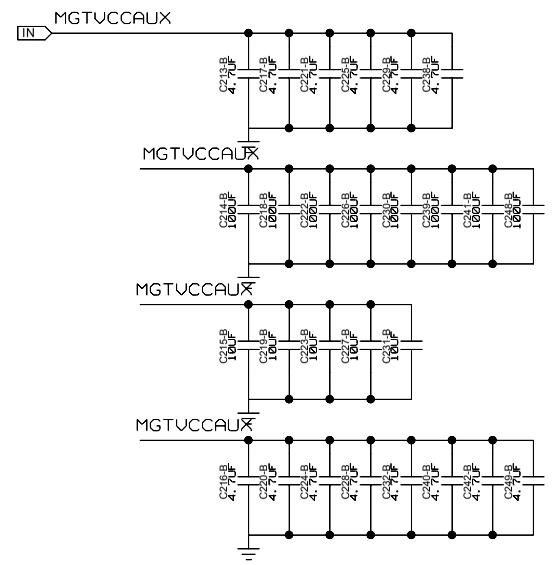

	NAME	DATE	SIGN
CHECKED	J. V.DE SOUZA		
CHECKED	U.SCHAEFER		
CHECKED	S.RAVE		
DRAWN	BAUSS		
BLOCK TITLE			

DRAWING TITLE

UNIVERSITY OF MAINZ

SIZE C | REV. | DRAWING NO.

SCALE | SHEET OF

REVISIONS				
ZONE	LTR	DESCRIPTION	DATE	APPR.

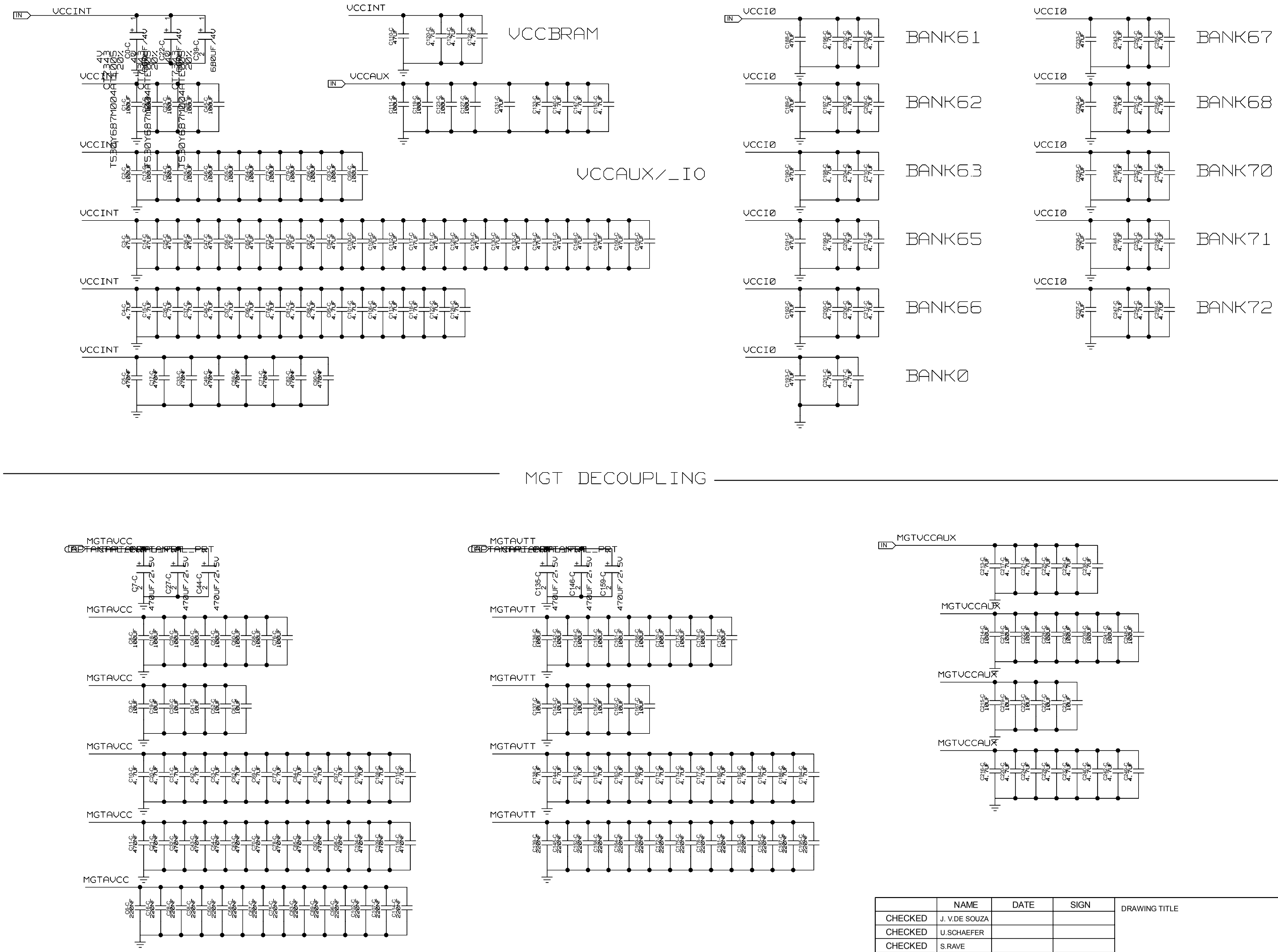

	NAME	DATE	SIGN
CHECKED	J. V.DE SOUZA		
CHECKED	U.SCHAEFER		
CHECKED	S.RAVE		
DRAWN	BAUSS		
BLOCK TITLE			

DRAWING TITLE

UNIVERSITY OF MAINZ

SIZE C | REV. | DRAWING NO.

SCALE | SHEET OF

REVISIONS				
ZONE	LTR	DESCRIPTION	DATE	APPR.

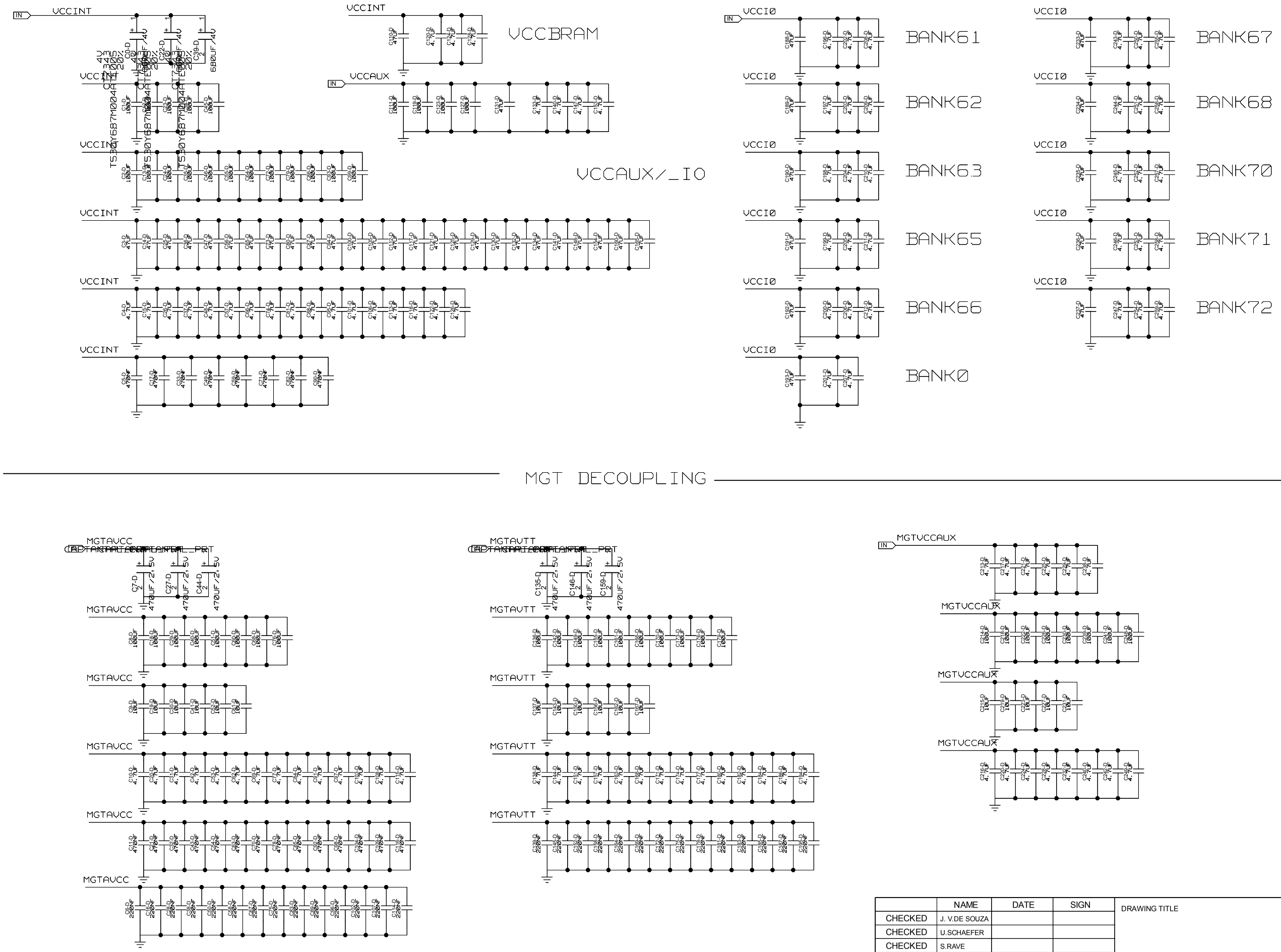

	NAME	DATE	SIGN
CHECKED	J. V.DE SOUZA		
CHECKED	U.SCHAEFER		
CHECKED	S.RAVE		
DRAWN	BAUSS		

BLOCK TITLE

DRAWING TITLE

UNIVERSITY OF MAINZ

SIZE C | REV. | DRAWING NO.

SCALE | SHEET OF

REVISIONS				
ZONE	LTR	DESCRIPTION	DATE	APPR.

MGT1 CLOCK

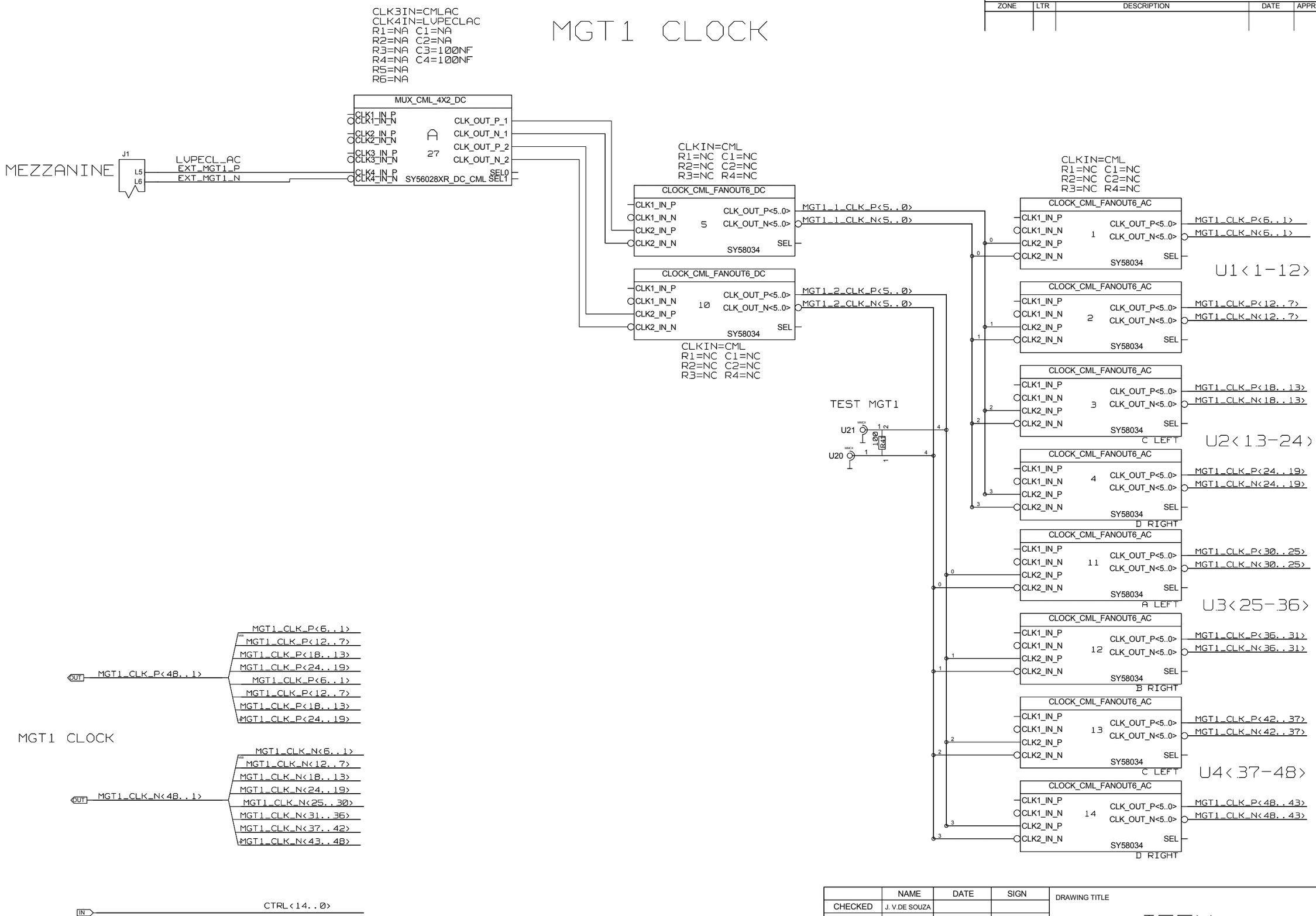

UPDATE PICK & PLACE DATA FOR FANOUT AND MUX

	NAME	DATE	SIGN
CHECKED	J. V.DE SOUZA		
CHECKED	U.SCHAEFER		
CHECKED	S.RAVE		
DRAWN	BAUSS	08.06.2017	

BLOCK TITLE: CLOCK

UNIVERSITY OF MAINZ

DRAWING TITLE: JFEX MGT1 CLOCK

SIZE: C | REV. | DRAWING NO.

SCALE | SHEET 1 OF 5

MGT2 CLOCK

REVISIONS				
ZONE	LTR	DESCRIPTION	DATE	APPR.

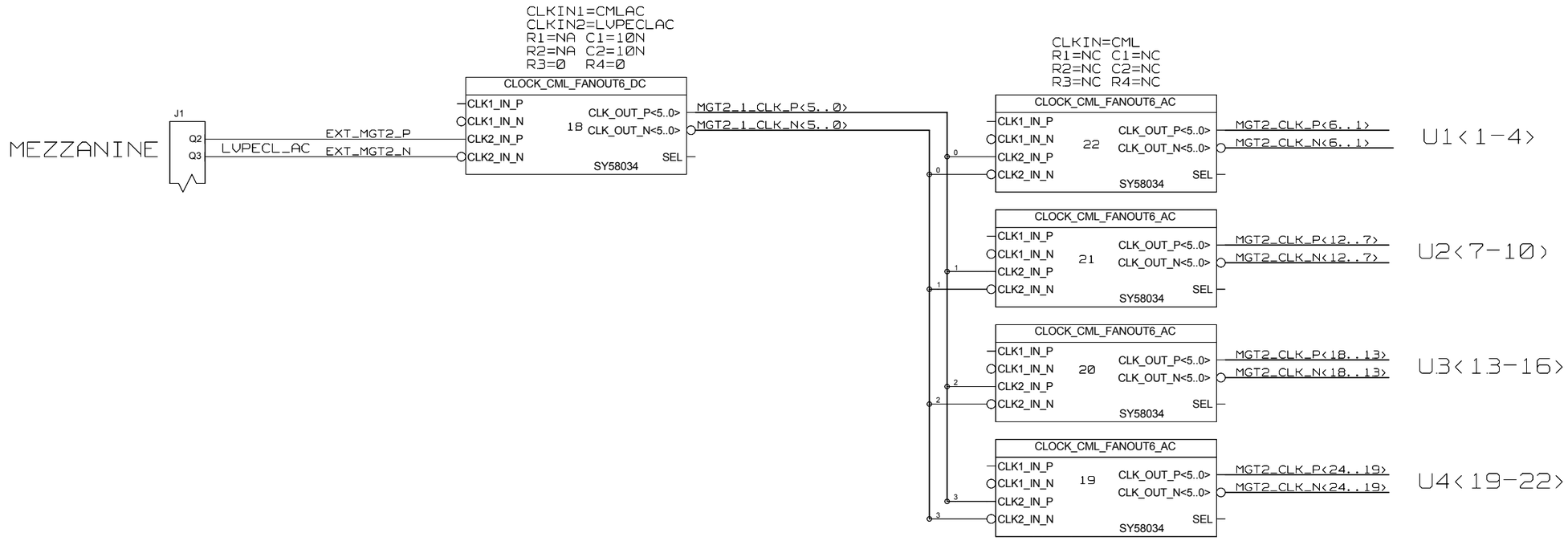

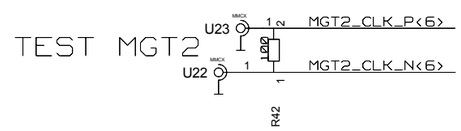

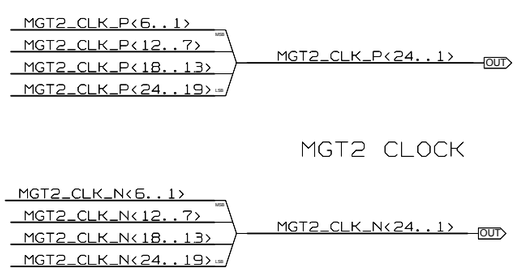

UPDATE PICK & PLACE DATA FOR FANOUT AND MUX

	NAME	DATE	SIGN
CHECKED	J. V.DE SOUZA		
CHECKED	U.SCHAEFER		
CHECKED	S.RAVE		
DRAWN	BAUSS	08.06.2017	

BLOCK TITLE: CLOCK

UNIVERSITY OF MAINZ

DRAWING TITLE: JFEX MGT2 CLOCK

SIZE: C | REV. | DRAWING NO.

SCALE | SHEET 2 OF 5

MGT3 CLOCK (ROD REFCLK)

REVISIONS				
ZONE	LTR	DESCRIPTION	DATE	APPR.

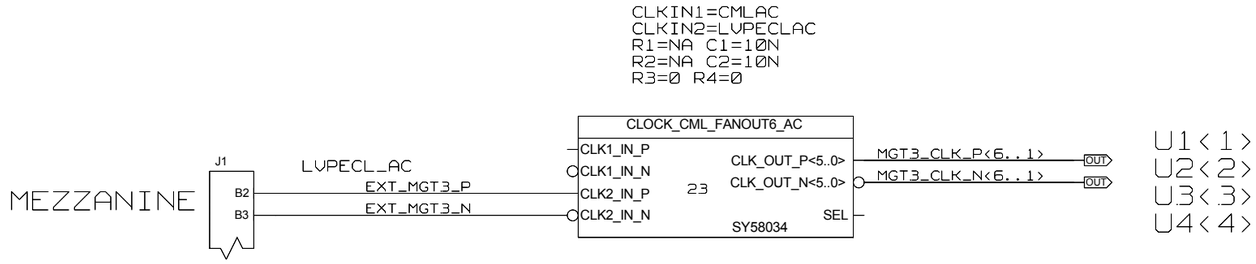

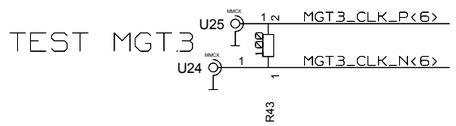

UPDATE PICK & PLACE DATA FOR FANOUT AND MUX

	NAME	DATE	SIGN
CHECKED	J. V.DE SOUZA		
CHECKED	U.SCHAEFER		
CHECKED	S.RAVE		
DRAWN	BAUSS	08.05.2017	

BLOCK TITLE: CLOCK

UNIVERSITY OF MAINZ

DRAWING TITLE: JFEX MGT3 CLOCK (ROD REFCLK)

SIZE: C | REV. | DRAWING NO.

SCALE | SHEET 3 OF 5

REVISIONS				
ZONE	LTR	DESCRIPTION	DATE	APPR.

MGT4 CLOCK (IPBUS REFCLK)

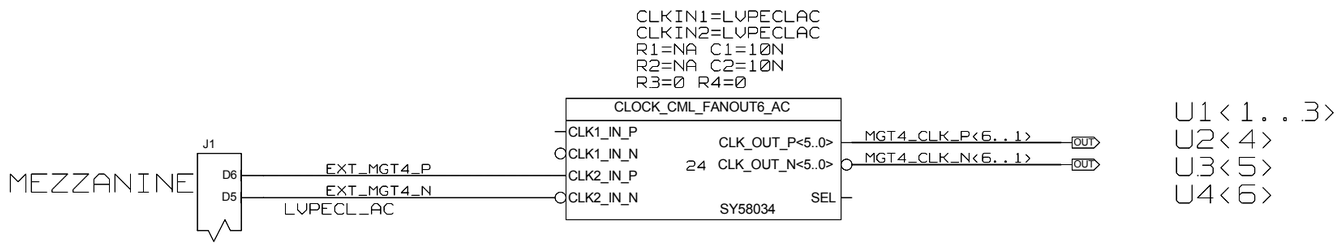

UPDATE PICK & PLACE DATA FOR FANOUT AND MUX

	NAME	DATE	SIGN
CHECKED	J. V.DE SOUZA		
CHECKED	U.SCHAEFER		
CHECKED	S.RAVE		
DRAWN	BAUSS	08.05.2017	

BLOCK TITLE: CLOCK

UNIVERSITY OF MAINZ

DRAWING TITLE: JFEX

MGT4 CLOCK(IPBUS REFCLK)

SIZE: C | REV. | DRAWING NO.

SCALE | SHEET 4 OF 5

REVISIONS				
ZONE	LTR	DESCRIPTION	DATE	APPR.

GLOBAL CLOCK

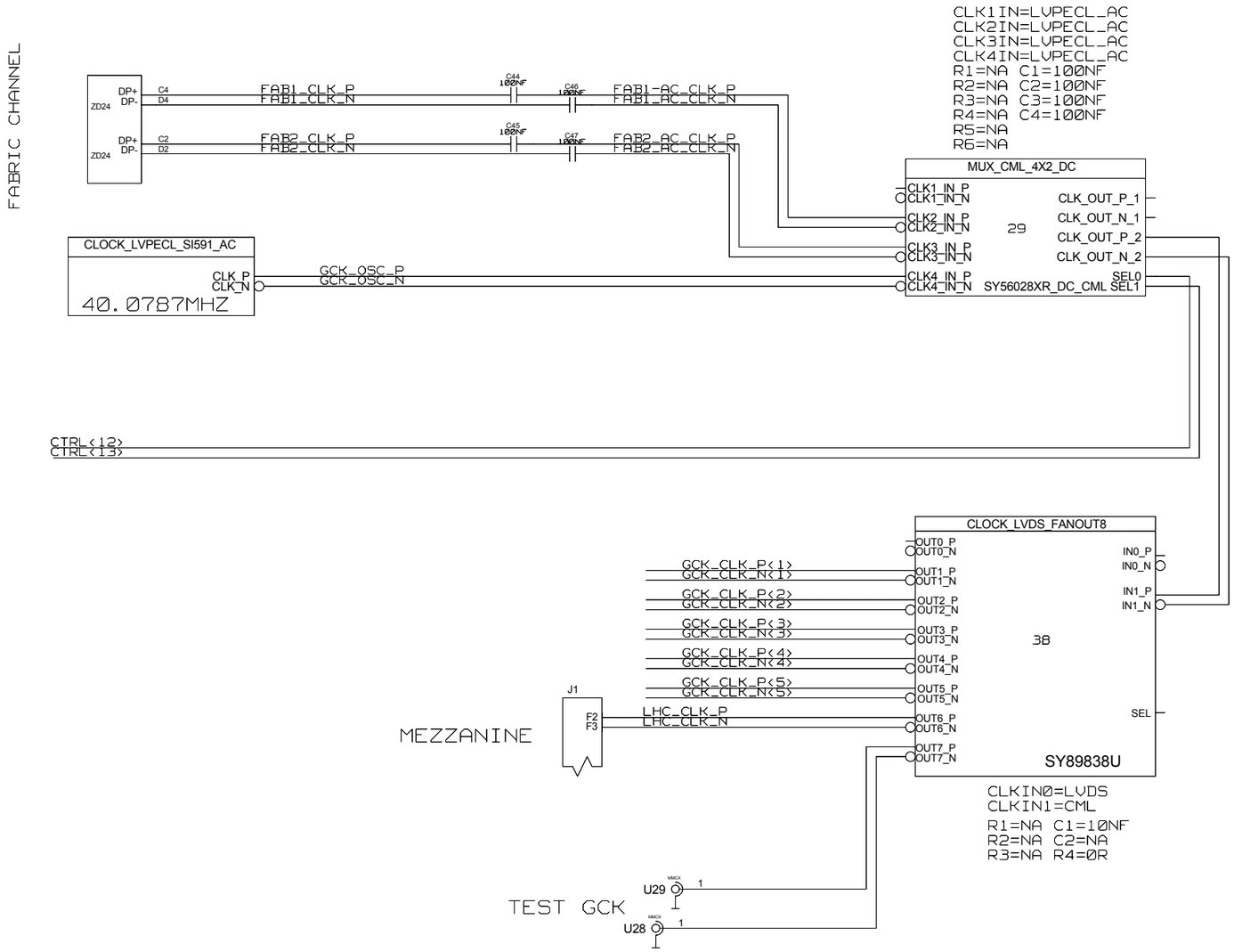

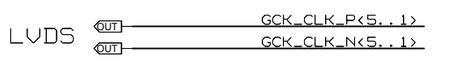

GCK1 = CLK CPLD
GCK2 = CLK U1
GCK3 = CLK U2
GCK4 = CLK U3
GCK5 = CLK U4

CMOS to Any-In

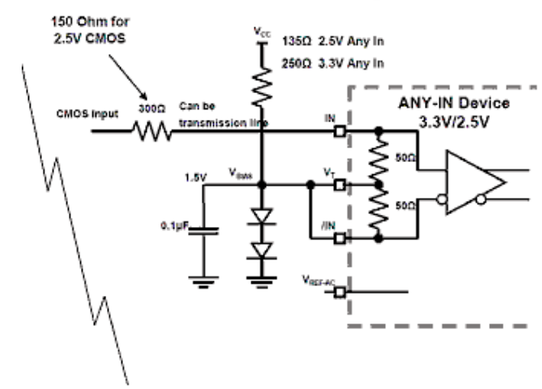

	NAME	DATE	SIGN
CHECKED	J. V.DE SOUZA		
CHECKED	U.SCHAEFER		
CHECKED	S.RAVE		
DRAWN	BAUSS	17.08.2015	

BLOCK TITLE: CLOCK

DRAWING TITLE: JFEX GLOBAL CLOCK

UNIVERSITY OF MAINZ

SIZE: C | REV. | DRAWING NO.

SCALE | SHEET 5 OF 5

REVISIONS				
ZONE	LTR	DESCRIPTION	DATE	APPR.

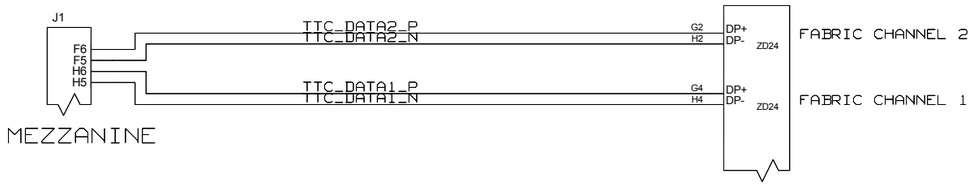

	NAME	DATE	SIGN
CHECKED	J. V.DE SOUZA		
CHECKED	U.SCHAEFER		
CHECKED	S.RAVE		
DRAWN	BAUSS	06.11.2015	
BLOCK TITLE	CLOCK		

UNIVERSITY OF MAINZ

DRAWING TITLE

JFEX

TTC DATA

SIZE C | REV. | DRAWING NO.

SCALE | SHEET OF

REVISIONS				
ZONE	LTR	DESCRIPTION	DATE	APPR.

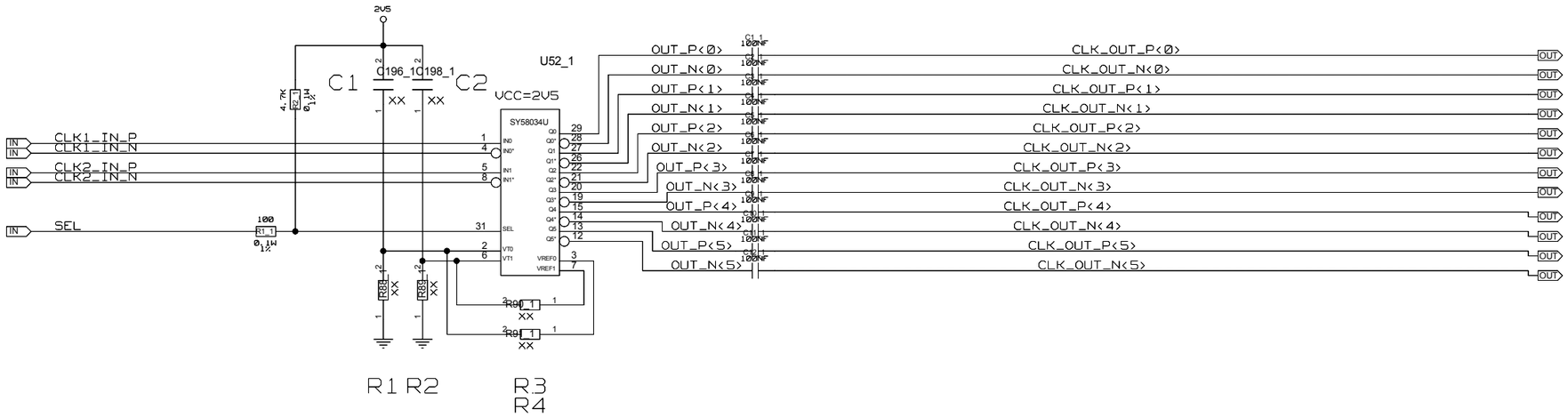

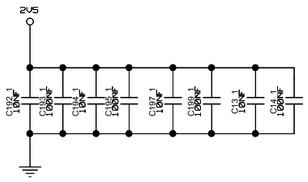

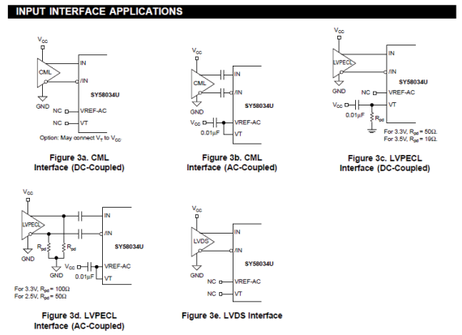

	NAME	DATE	SIGN
CHECKED	J. V.DE SOUZA		
CHECKED	U.SCHAEFER		
CHECKED	S.RAVE		
DRAWN	BAUSS		

BLOCK TITLE
CLOCK CML FANOUT6 AC

DRAWING TITLE
CLOCK

UNIVERSITY OF MAINZ

SIZE C | REV. | DRAWING NO.

SCALE | SHEET OF

REVISIONS				
ZONE	LTR	DESCRIPTION	DATE	APPR.

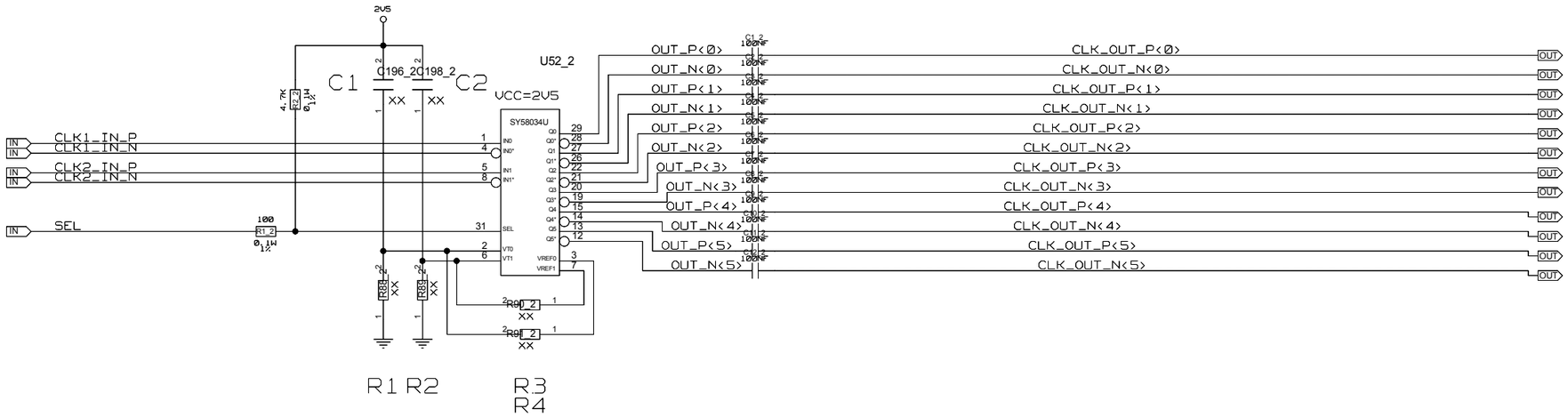

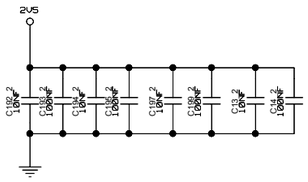

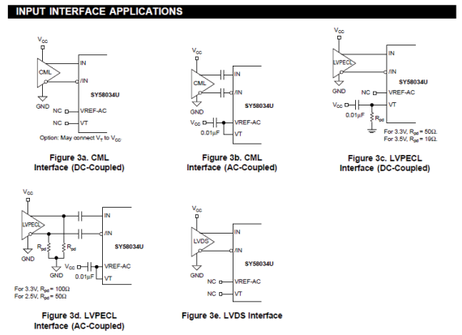

	NAME	DATE	SIGN
CHECKED	J. V.DE SOUZA		
CHECKED	U.SCHAEFER		
CHECKED	S.RAVE		
DRAWN	BAUSS		

BLOCK TITLE
CLOCK CML FANOUT6 AC

DRAWING TITLE
CLOCK

UNIVERSITY OF MAINZ

SIZE C | REV. | DRAWING NO.

SCALE | SHEET OF

REVISIONS				
ZONE	LTR	DESCRIPTION	DATE	APPR.

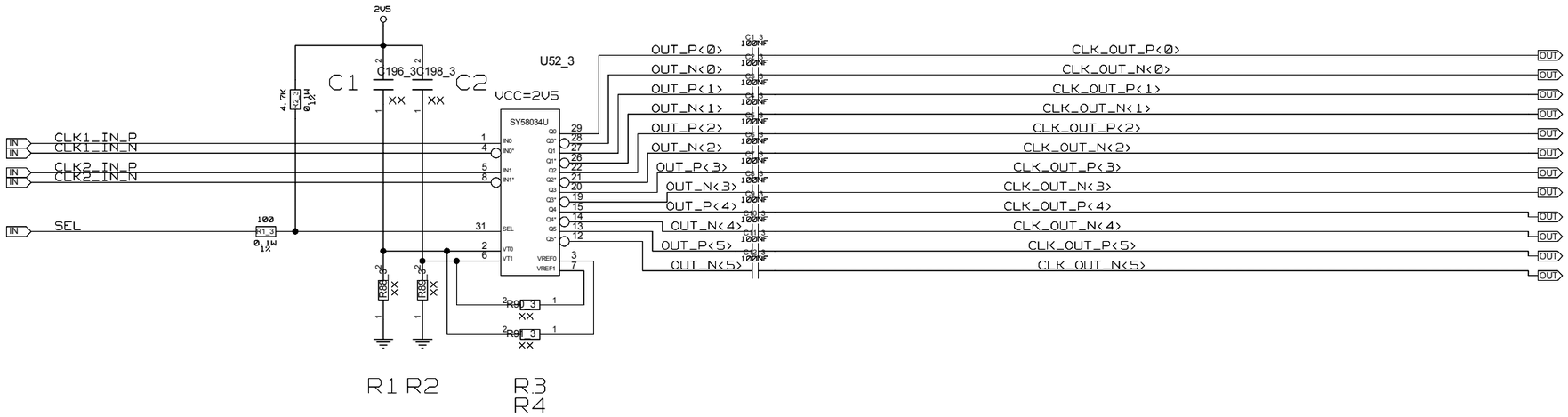

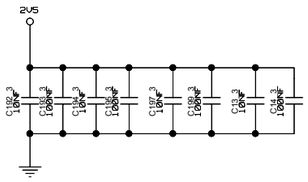

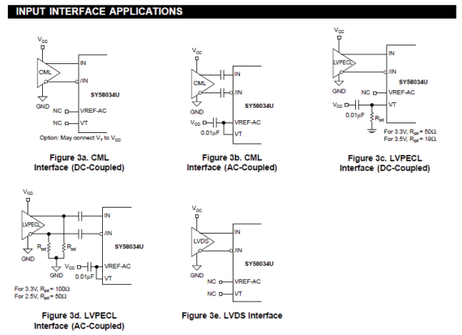

	NAME	DATE	SIGN
CHECKED	J. V.DE SOUZA		
CHECKED	U.SCHAEFER		
CHECKED	S.RAVE		
DRAWN	BAUSS		

BLOCK TITLE
CLOCK CML FANOUT6 AC

DRAWING TITLE
CLOCK

UNIVERSITY OF MAINZ

SIZE C | REV. | DRAWING NO.

SCALE | SHEET OF

REVISIONS				
ZONE	LTR	DESCRIPTION	DATE	APPR.

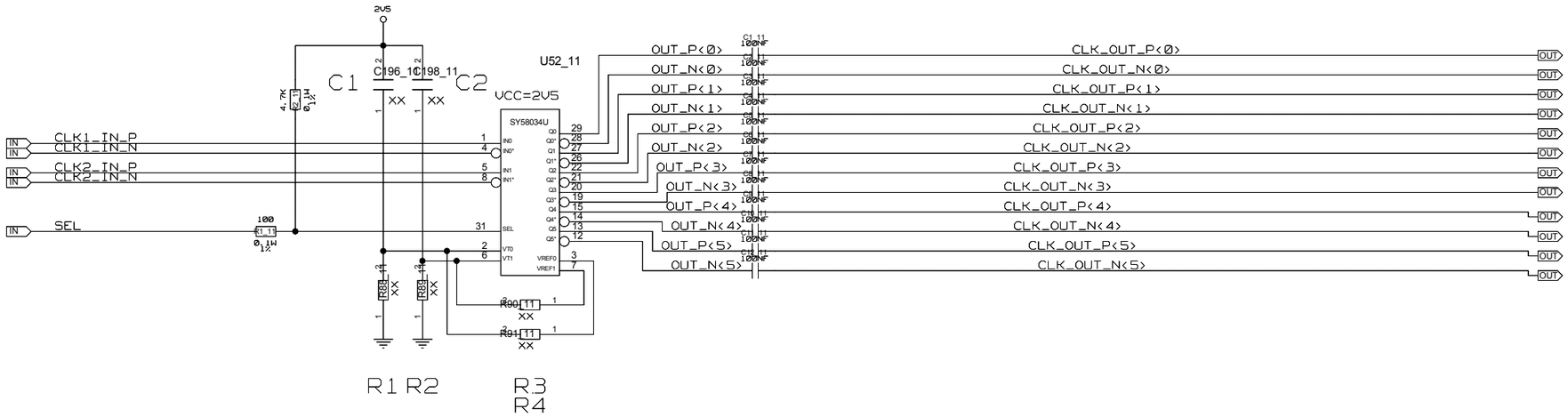

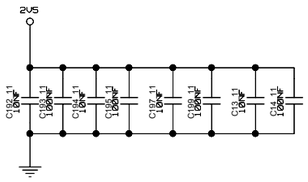

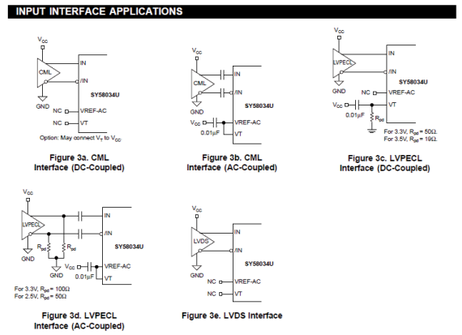

	NAME	DATE	SIGN
CHECKED	J. V.DE SOUZA		
CHECKED	U.SCHAEFER		
CHECKED	S.RAVE		
DRAWN	BAUSS		

BLOCK TITLE
CLOCK CML FANOUT6 AC

DRAWING TITLE
CLOCK

UNIVERSITY OF MAINZ

SIZE C | REV. | DRAWING NO.

SCALE | SHEET OF

REVISIONS				
ZONE	LTR	DESCRIPTION	DATE	APPR.

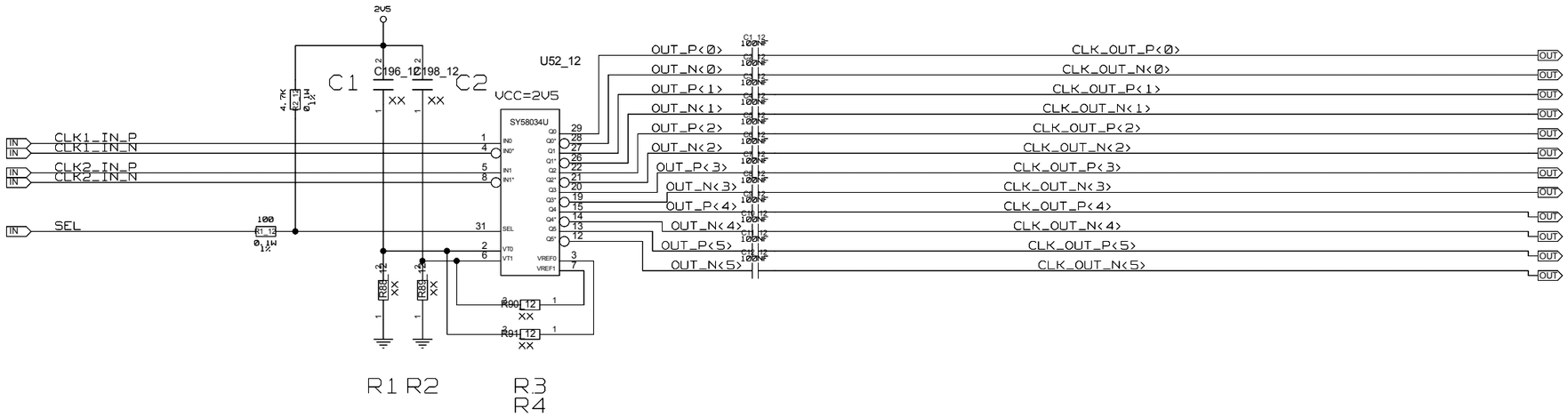

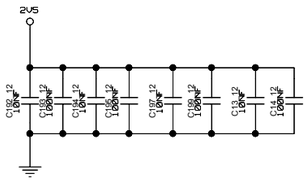

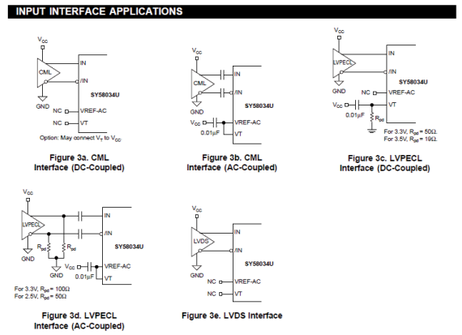

	NAME	DATE	SIGN
CHECKED	J. V.DE SOUZA		
CHECKED	U.SCHAEFER		
CHECKED	S.RAVE		
DRAWN	BAUSS		

BLOCK TITLE
CLOCK CML FANOUT6 AC

DRAWING TITLE
CLOCK

UNIVERSITY OF MAINZ

SIZE C | REV. | DRAWING NO.

SCALE | SHEET OF

REVISIONS				
ZONE	LTR	DESCRIPTION	DATE	APPR.

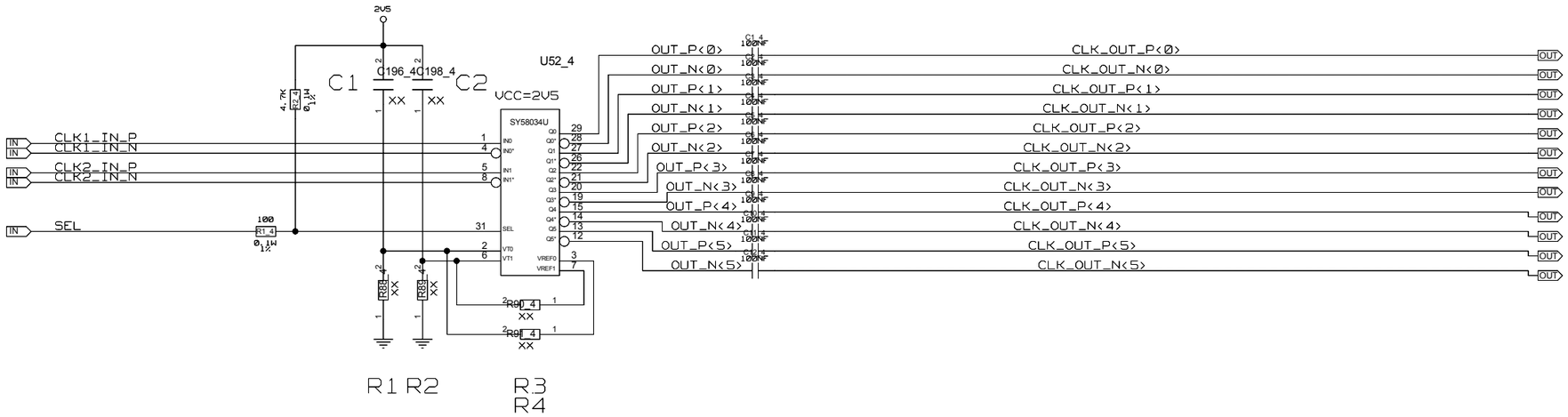

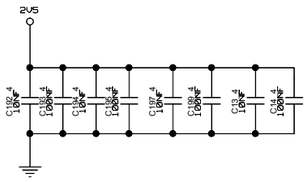

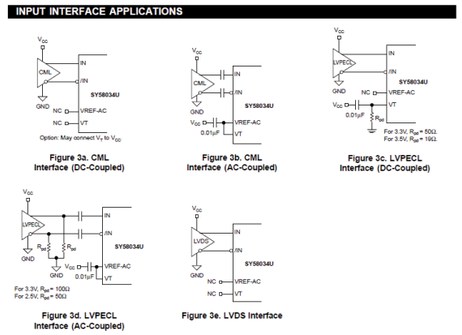

	NAME	DATE	SIGN
CHECKED	J. V.DE SOUZA		
CHECKED	U.SCHAEFER		
CHECKED	S.RAVE		
DRAWN	BAUSS		

BLOCK TITLE
CLOCK CML FANOUT6 AC

DRAWING TITLE
CLOCK

UNIVERSITY OF MAINZ

SIZE C | REV. | DRAWING NO.

SCALE | SHEET OF

REVISIONS				
ZONE	LTR	DESCRIPTION	DATE	APPR.

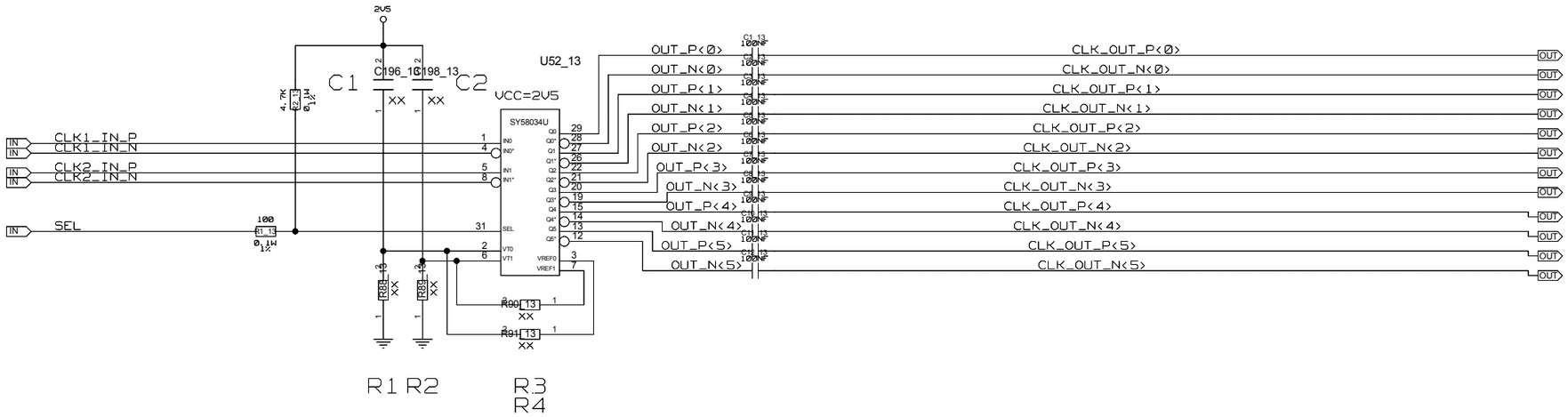

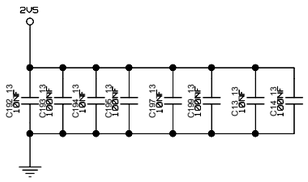

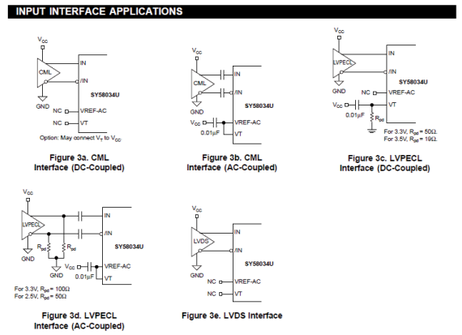

	NAME	DATE	SIGN
CHECKED	J. V.DE SOUZA		
CHECKED	U.SCHAEFER		
CHECKED	S.RAVE		
DRAWN	BAUSS		

BLOCK TITLE
CLOCK CML FANOUT6 AC

DRAWING TITLE
CLOCK

UNIVERSITY OF MAINZ

SIZE C | REV. | DRAWING NO.

SCALE | SHEET OF

REVISIONS				
ZONE	LTR	DESCRIPTION	DATE	APPR.

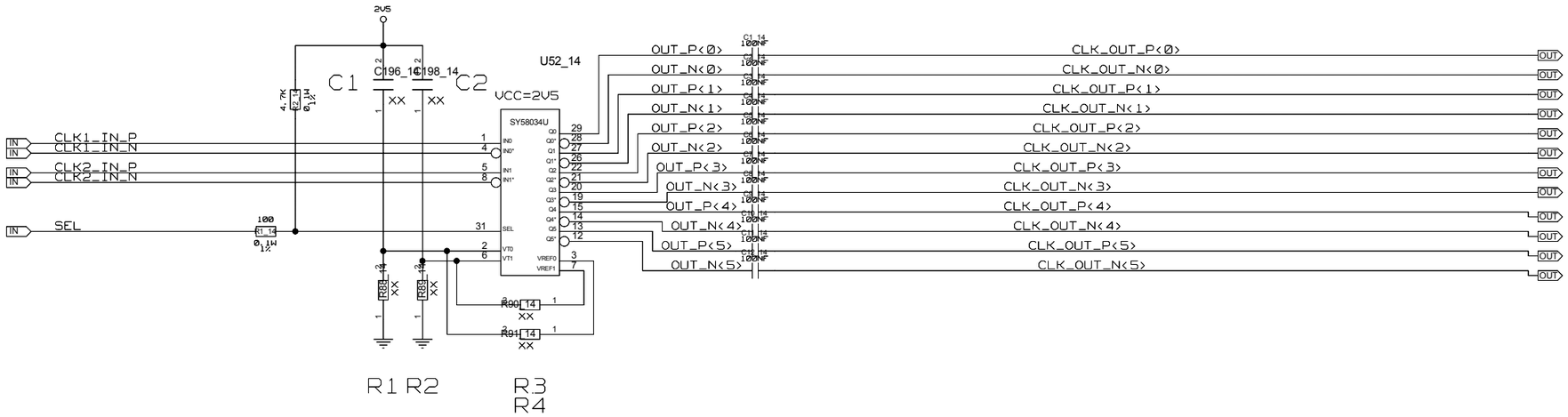

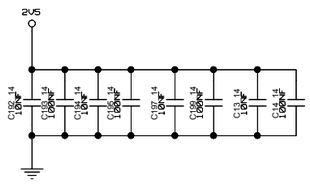

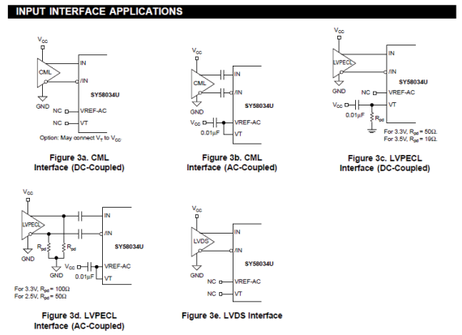

	NAME	DATE	SIGN
CHECKED	J. V.DE SOUZA		
CHECKED	U.SCHAEFER		
CHECKED	S.RAVE		
DRAWN	BAUSS		

BLOCK TITLE
CLOCK CML FANOUT6 AC

DRAWING TITLE
CLOCK

UNIVERSITY OF MAINZ

SIZE C | REV. | DRAWING NO.

SCALE | SHEET OF

REVISIONS				
ZONE	LTR	DESCRIPTION	DATE	APPR.

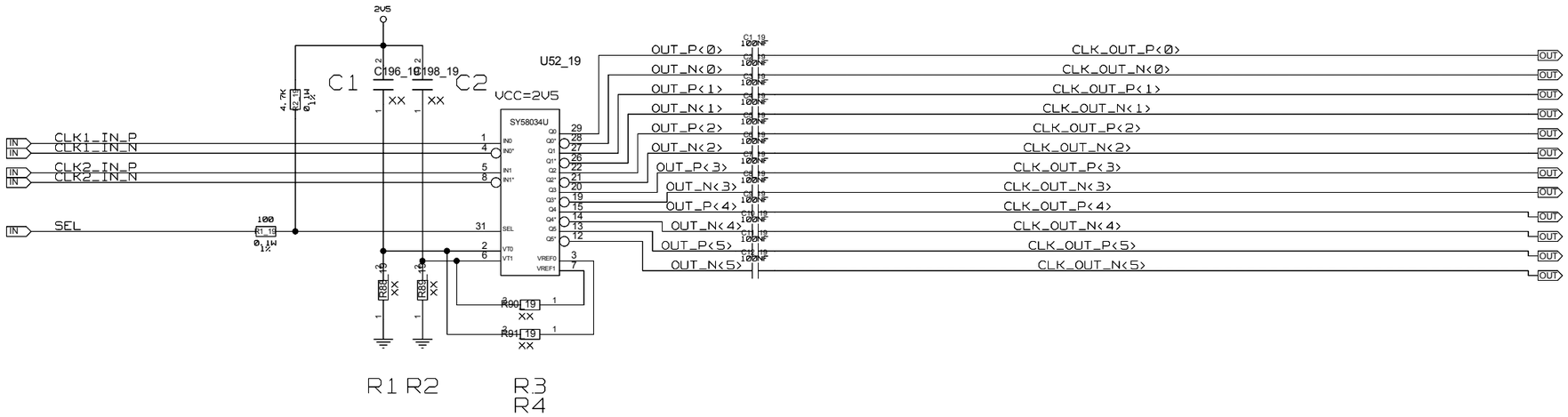

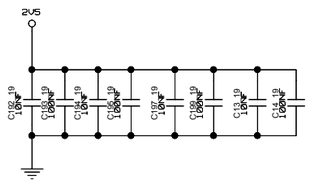

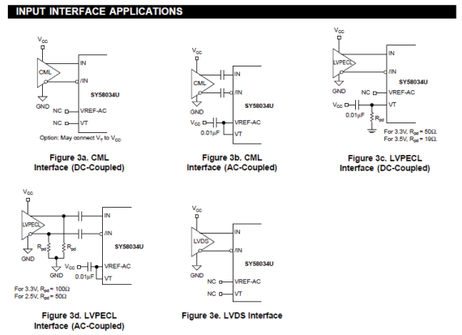

	NAME	DATE	SIGN
CHECKED	J. V.DE SOUZA		
CHECKED	U.SCHAEFER		
CHECKED	S.RAVE		
DRAWN	BAUSS		

BLOCK TITLE
CLOCK CML FANOUT6 AC

DRAWING TITLE
CLOCK

UNIVERSITY OF MAINZ

SIZE C | REV. | DRAWING NO.

SCALE | SHEET OF

REVISIONS				
ZONE	LTR	DESCRIPTION	DATE	APPR.

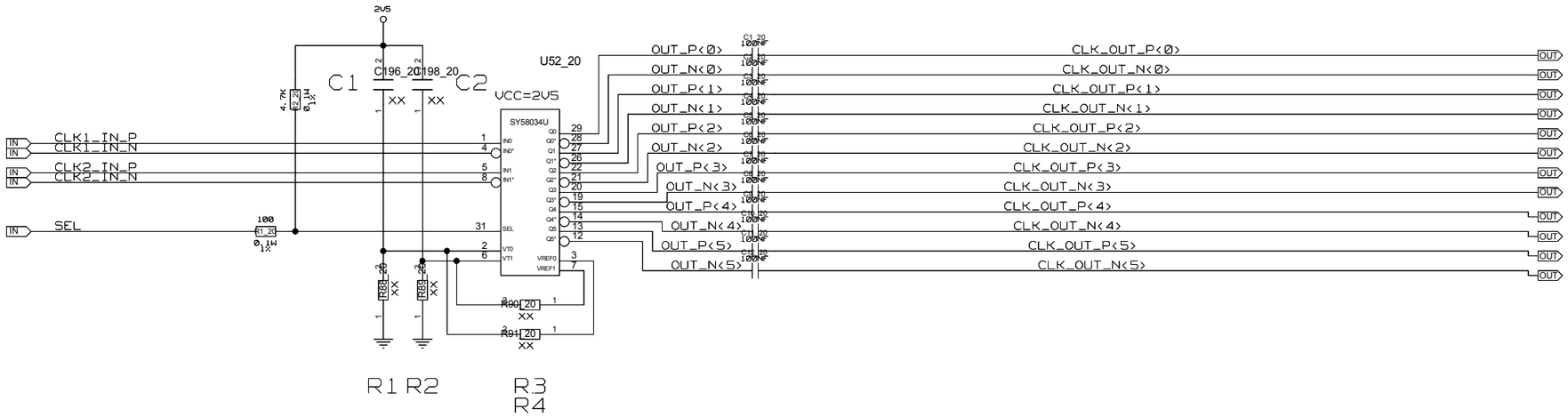

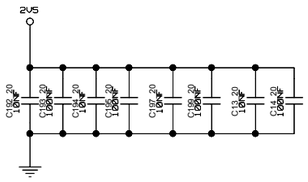

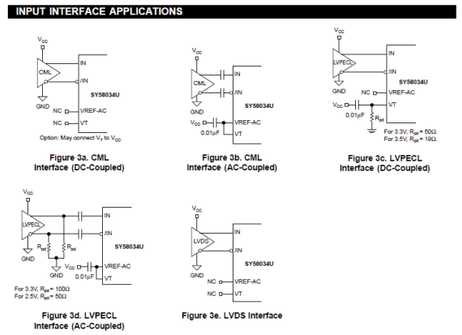

	NAME	DATE	SIGN
CHECKED	J. V.DE SOUZA		
CHECKED	U.SCHAEFER		
CHECKED	S.RAVE		
DRAWN	BAUSS		

BLOCK TITLE
CLOCK CML FANOUT6 AC

DRAWING TITLE
CLOCK

UNIVERSITY OF MAINZ

SIZE C | REV. | DRAWING NO.

SCALE | SHEET OF

REVISIONS				
ZONE	LTR	DESCRIPTION	DATE	APPR.

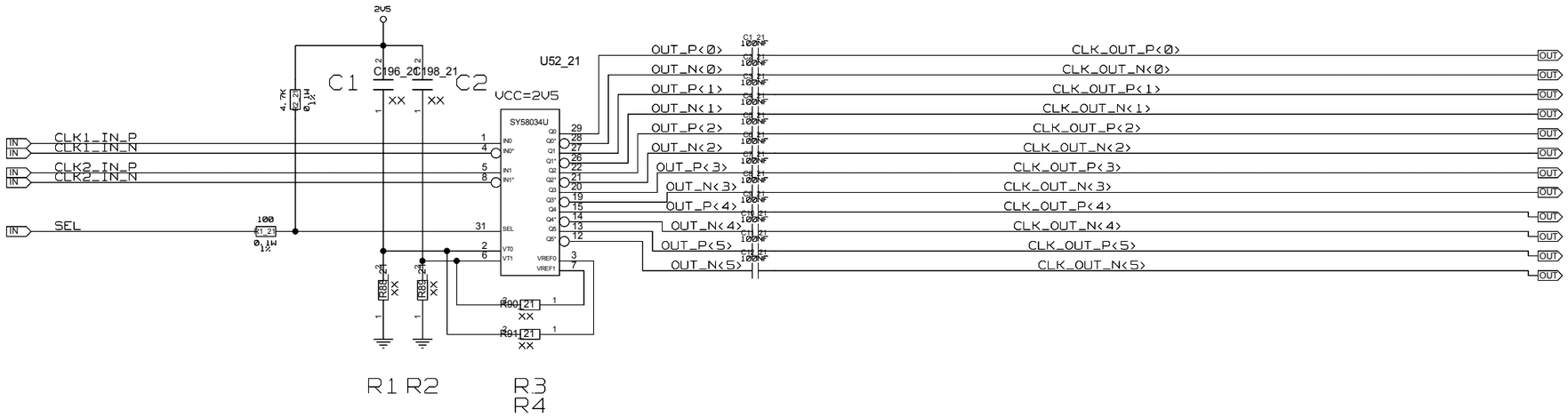

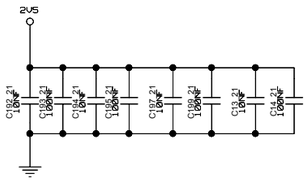

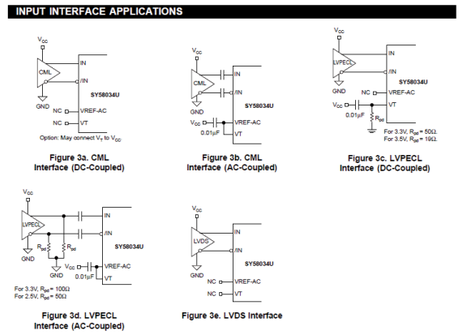

	NAME	DATE	SIGN
CHECKED	J. V.DE SOUZA		
CHECKED	U.SCHAEFER		
CHECKED	S.RAVE		
DRAWN	BAUSS		

BLOCK TITLE
CLOCK CML FANOUT6 AC

DRAWING TITLE
CLOCK

UNIVERSITY OF MAINZ

SIZE C | REV. | DRAWING NO.

SCALE | SHEET OF

REVISIONS				
ZONE	LTR	DESCRIPTION	DATE	APPR.

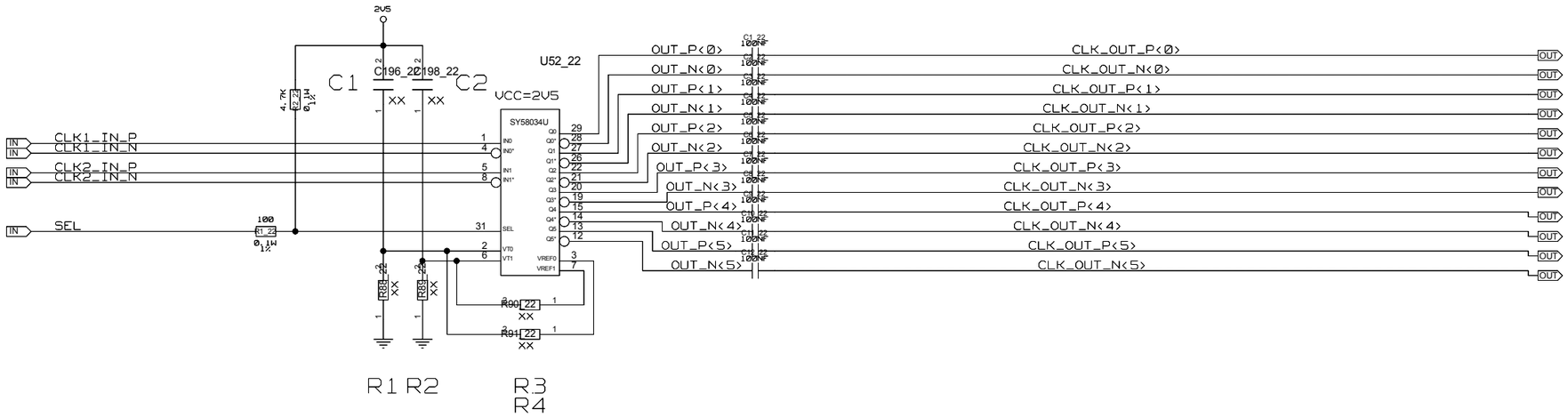

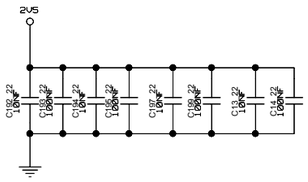

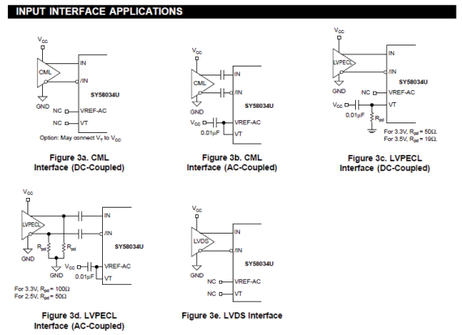

	NAME	DATE	SIGN
CHECKED	J. V.DE SOUZA		
CHECKED	U.SCHAEFER		
CHECKED	S.RAVE		
DRAWN	BAUSS		

BLOCK TITLE
CLOCK CML FANOUT6 AC

DRAWING TITLE
CLOCK

UNIVERSITY OF MAINZ

SIZE C | REV. | DRAWING NO.

SCALE | SHEET OF

REVISIONS				
ZONE	LTR	DESCRIPTION	DATE	APPR.

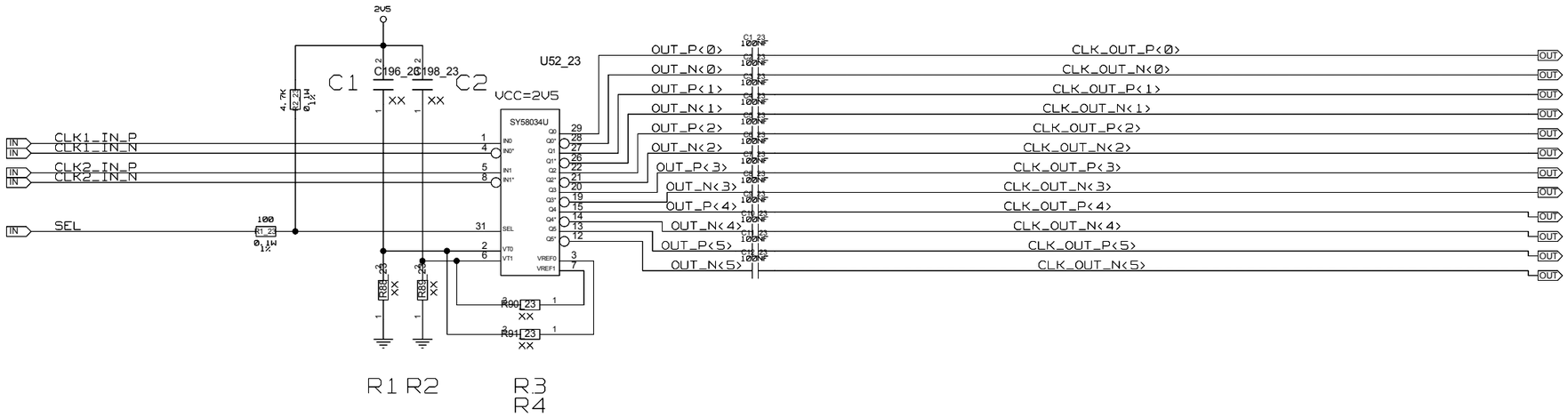

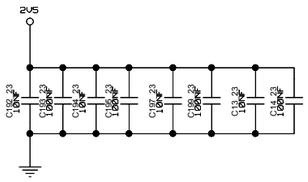

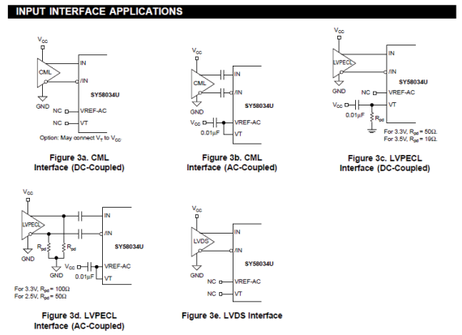

	NAME	DATE	SIGN
CHECKED	J. V.DE SOUZA		
CHECKED	U.SCHAEFER		
CHECKED	S.RAVE		
DRAWN	BAUSS		

BLOCK TITLE
CLOCK CML FANOUT6 AC

DRAWING TITLE
CLOCK

UNIVERSITY OF MAINZ

SIZE C | REV. | DRAWING NO.

SCALE | SHEET OF

REVISIONS				
ZONE	LTR	DESCRIPTION	DATE	APPR.

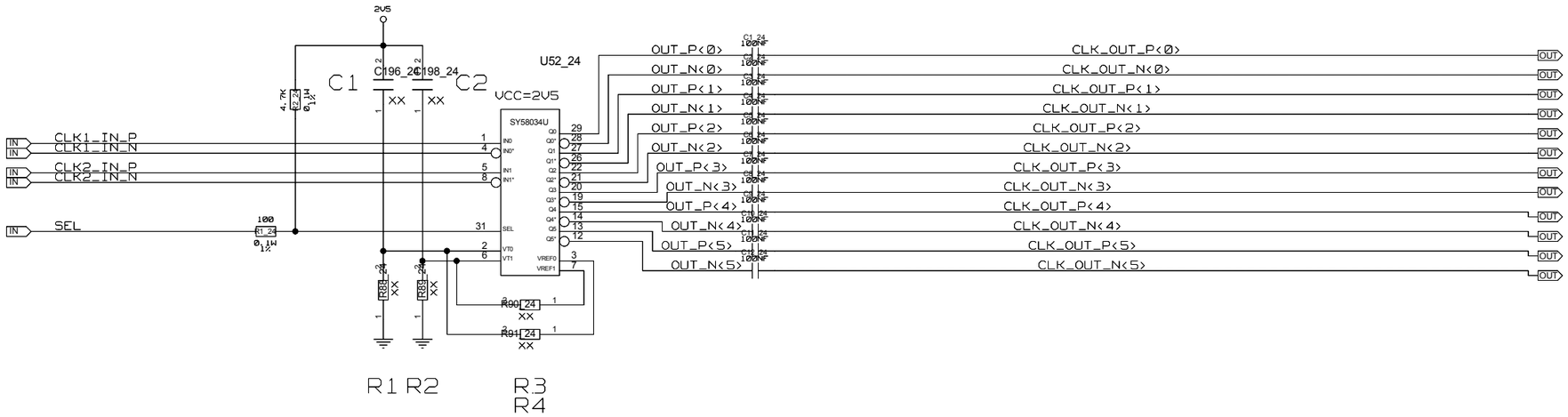

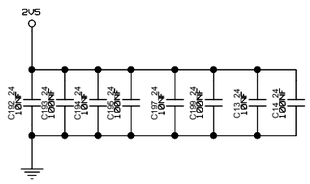

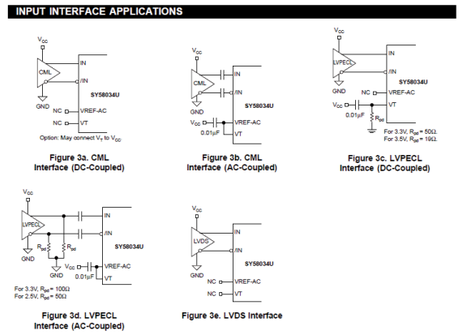

	NAME	DATE	SIGN
CHECKED	J. V.DE SOUZA		
CHECKED	U.SCHAEFER		
CHECKED	S.RAVE		
DRAWN	BAUSS		

BLOCK TITLE
CLOCK CML FANOUT6 AC

DRAWING TITLE
CLOCK

UNIVERSITY OF MAINZ

SIZE C | REV. | DRAWING NO.

SCALE | SHEET OF

REVISIONS				
ZONE	LTR	DESCRIPTION	DATE	APPR.

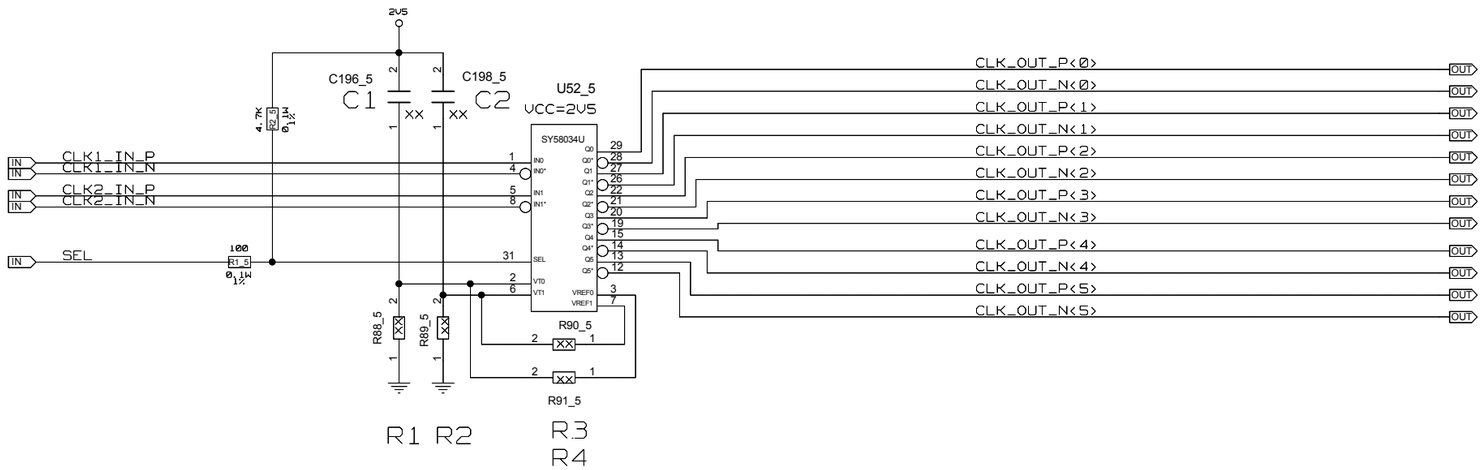

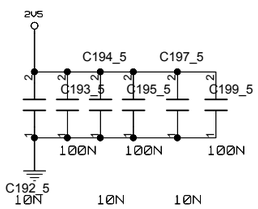

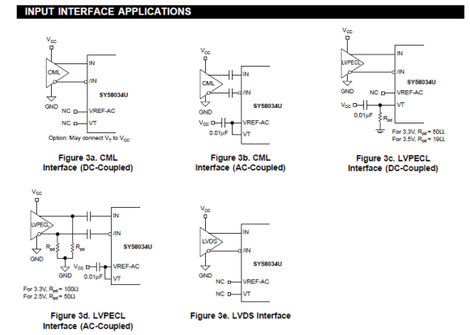

	NAME	DATE	SIGN
CHECKED	J. V.DE SOUZA		
CHECKED	U.SCHAEFER		
CHECKED	S.RAVE		
DRAWN	BAUSS		

BLOCK TITLE
CLOCK_CML_FANOUT6_DC

DRAWING TITLE
CLOCK

UNIVERSITY OF MAINZ

SIZE C | REV. | DRAWING NO.

SCALE | SHEET OF

REVISIONS				
ZONE	LTR	DESCRIPTION	DATE	APPR.

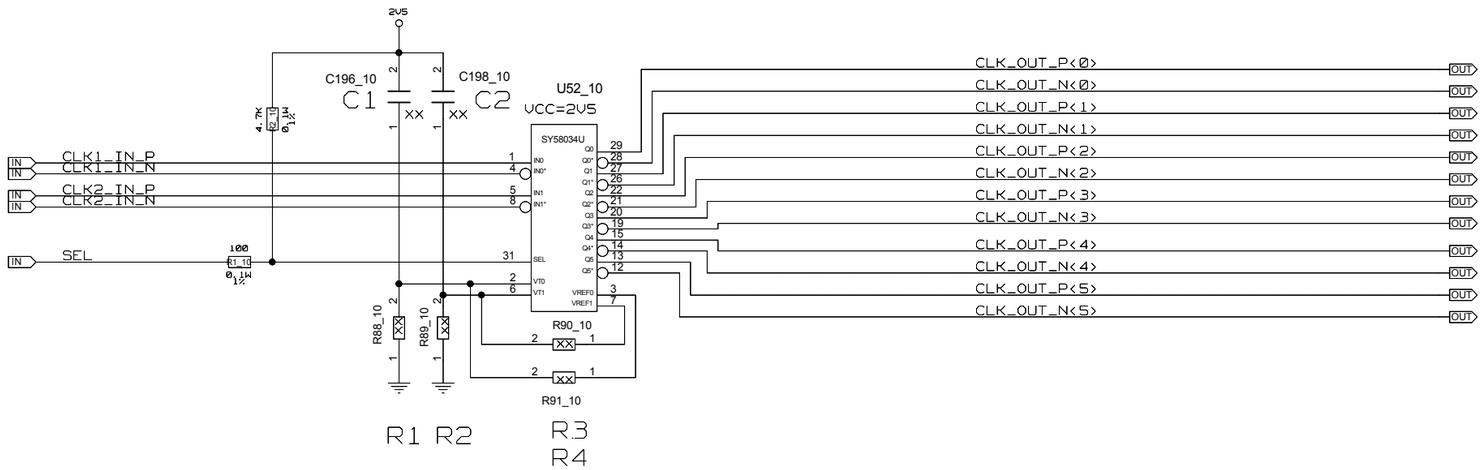

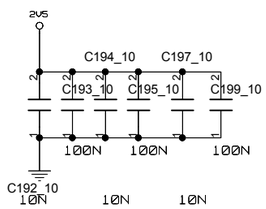

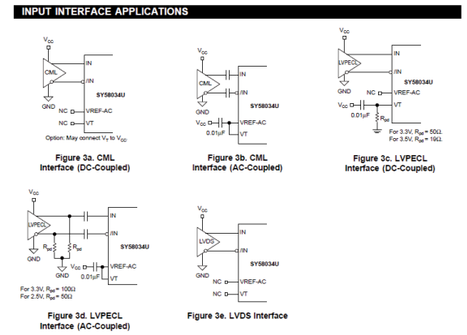

	NAME	DATE	SIGN
CHECKED	J. V.DE SOUZA		
CHECKED	U.SCHAEFER		
CHECKED	S.RAVE		
DRAWN	BAUSS		

BLOCK TITLE
CLOCK_CML_FANOUT6_DC

DRAWING TITLE
CLOCK

UNIVERSITY OF MAINZ

SIZE C | REV. | DRAWING NO.

SCALE | SHEET OF

REVISIONS				
ZONE	LTR	DESCRIPTION	DATE	APPR.

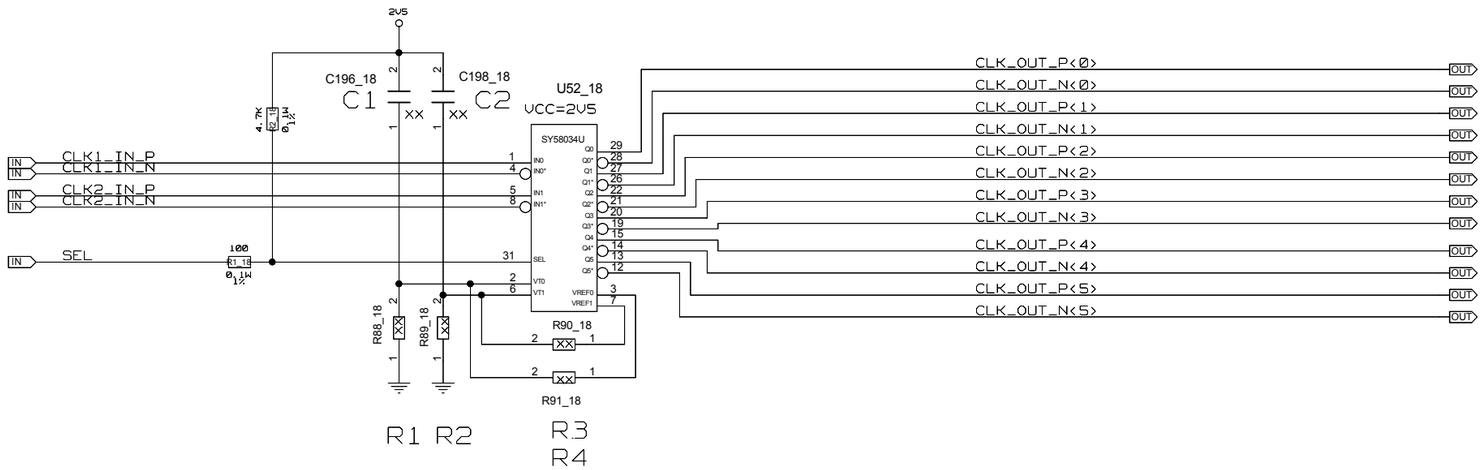

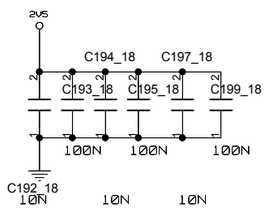

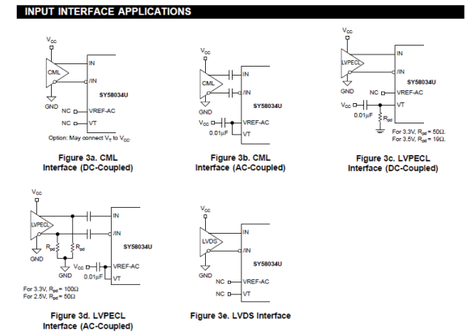

	NAME	DATE	SIGN
CHECKED	J. V.DE SOUZA		
CHECKED	U.SCHAEFER		
CHECKED	S.RAVE		
DRAWN	BAUSS		

BLOCK TITLE
CLOCK_CML_FANOUT6_DC

DRAWING TITLE
CLOCK

UNIVERSITY OF MAINZ

SIZE C | REV. | DRAWING NO.

SCALE | SHEET OF

REVISIONS				
ZONE	LTR	DESCRIPTION	DATE	APPR.

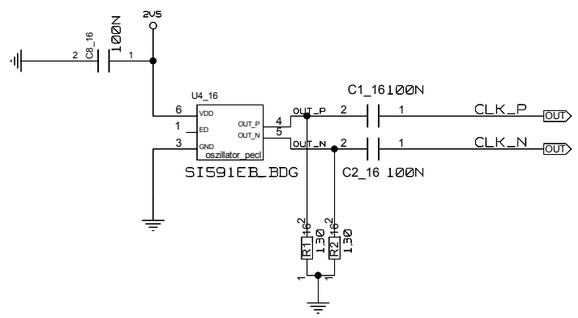

	NAME	DATE	SIGN
CHECKED	J. V.DE SOUZA		
CHECKED	U.SCHAEFER		
CHECKED	S.RAVE		
DRAWN	BAUSS		

BLOCK TITLE
CLOCK_LVPECL_AC

DRAWING TITLE
CLOCK

UNIVERSITY OF MAINZ

SIZE C | REV. | DRAWING NO.

SCALE | SHEET OF

REVISIONS				
ZONE	LTR	DESCRIPTION	DATE	APPR.

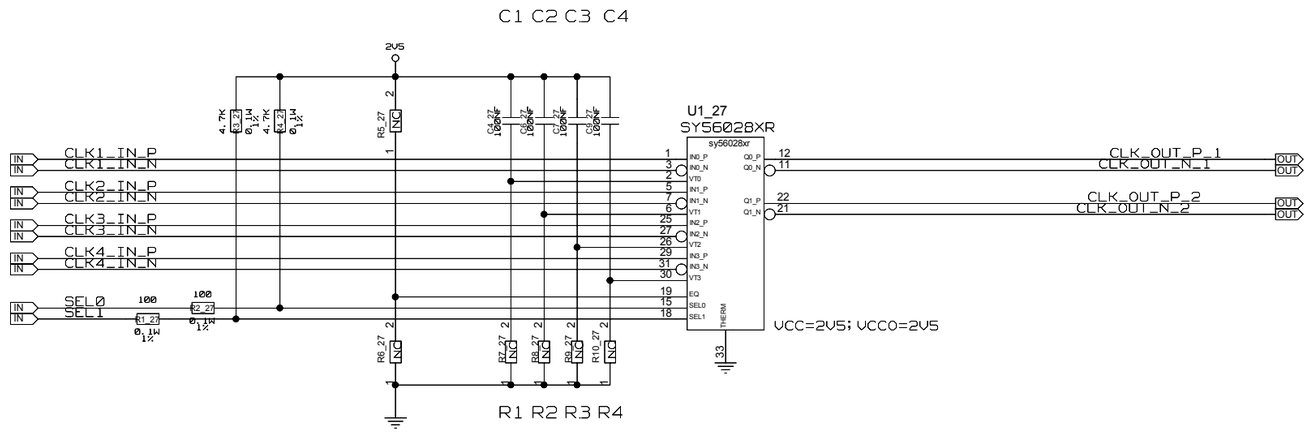

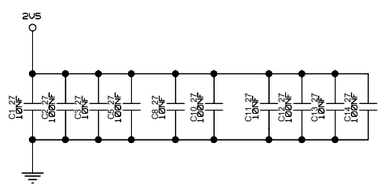

Input Interface Applications

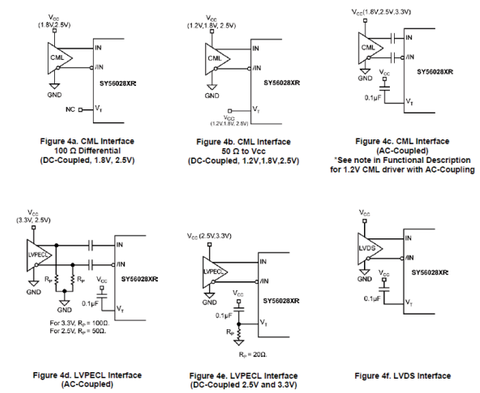

	NAME	DATE	SIGN
CHECKED	J. V.DE SOUZA		
CHECKED	U.SCHAEFER		
CHECKED	S.RAVE		
DRAWN	BAUSS		

BLOCK TITLE
MUX_CML_4X2_DC

DRAWING TITLE
CLOCK

UNIVERSITY OF MAINZ

SIZE C | REV. | DRAWING NO.

SCALE | SHEET OF

REVISIONS				
ZONE	LTR	DESCRIPTION	DATE	APPR.

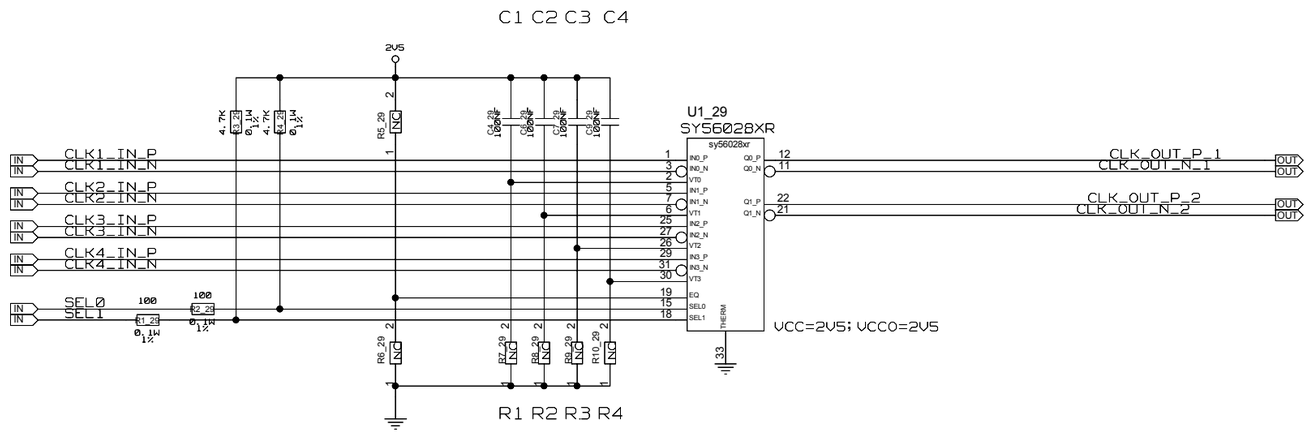

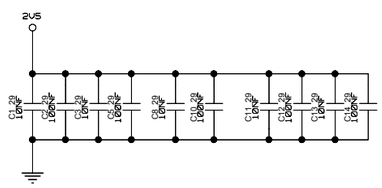

Input Interface Applications

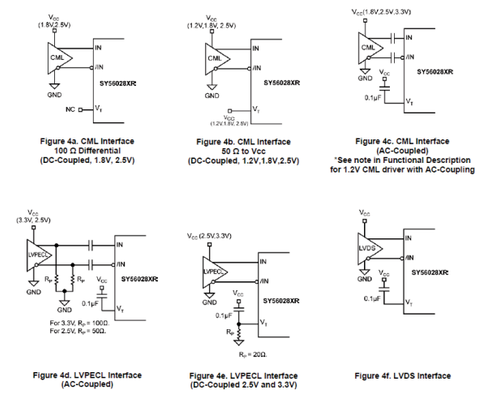

	NAME	DATE	SIGN
CHECKED	J. V.DE SOUZA		
CHECKED	U.SCHAEFER		
CHECKED	S.RAVE		
DRAWN	BAUSS		

BLOCK TITLE
MUX_CML_4X2_DC

DRAWING TITLE
CLOCK

UNIVERSITY OF MAINZ

SIZE C | REV. | DRAWING NO.

SCALE | SHEET OF

REVISIONS				
ZONE	LTR	DESCRIPTION	DATE	APPR.

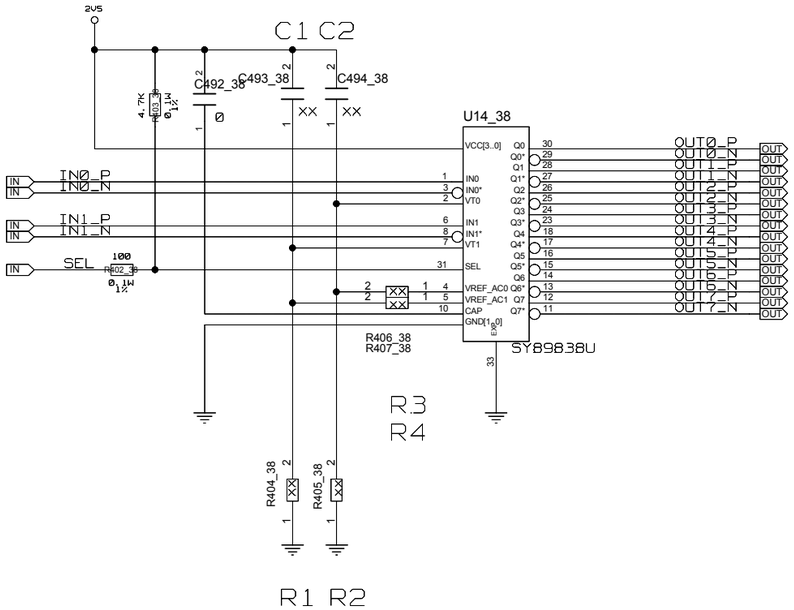

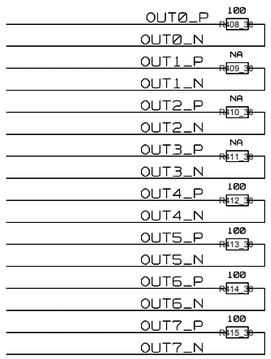

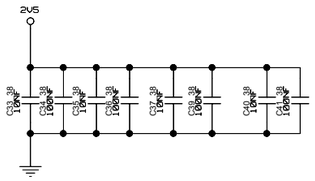

	NAME	DATE	SIGN
CHECKED	J. V.DE SOUZA		
CHECKED	U.SCHAEFER		
CHECKED	S.RAVE		
DRAWN	BAUSS		

BLOCK TITLE
CLOCK_LVDS_FANOUT8

DRAWING TITLE
CLOCK

UNIVERSITY OF MAINZ

SIZE C | REV. | DRAWING NO.

SCALE | SHEET OF

IPMC CONNECTOR MOLEX_87782-3003

REVISIONS				
ZONE	LTR	DESCRIPTION	DATE	APPR.

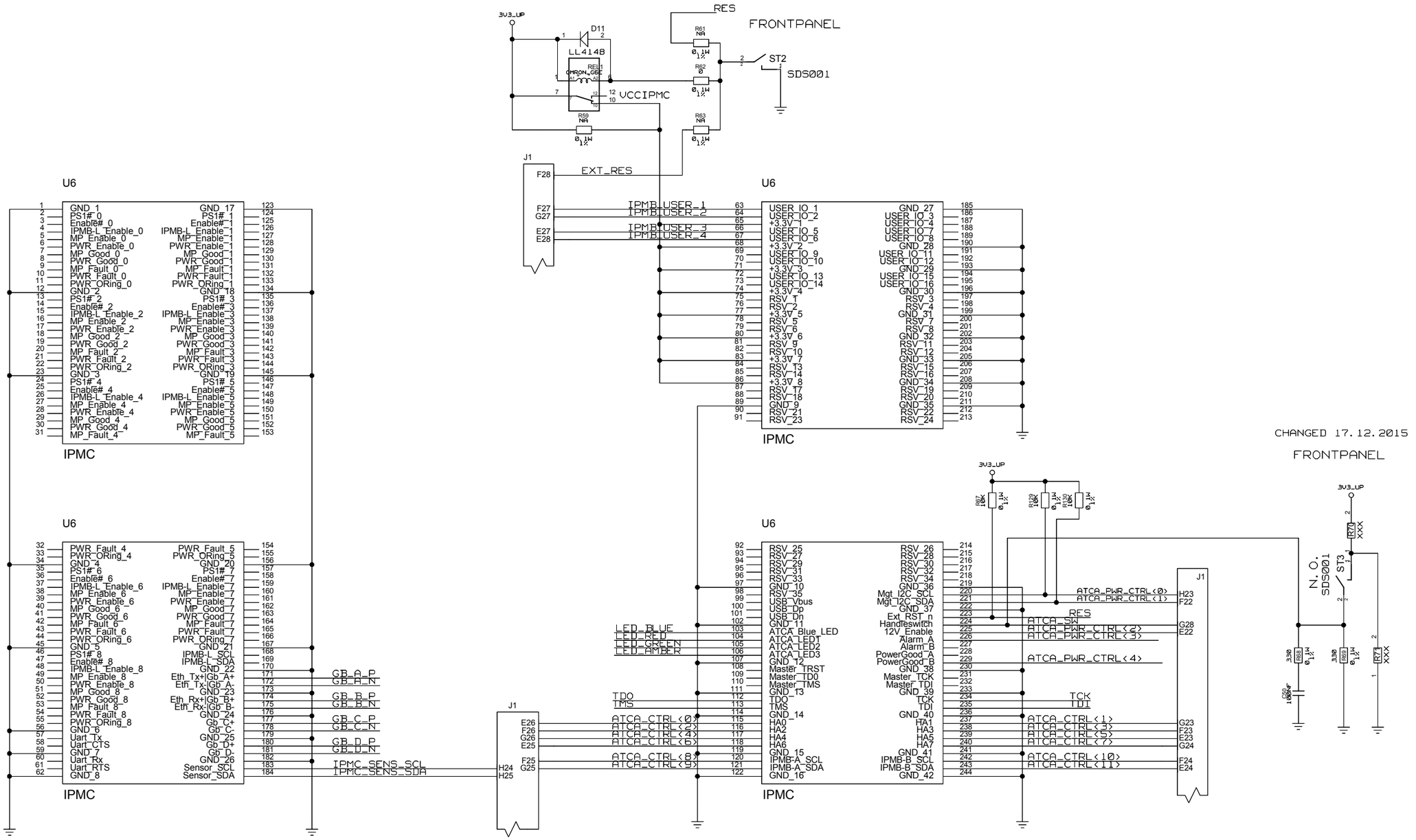

ATCA_HA<0..7> BACKPLANE + MEZZANINE

ATCA_A/B_SCL/SDA BACKPLANE + MEZZANINE

ATCA_CTRL<11..0>

ATCA_PWR_CTRL<4..0>

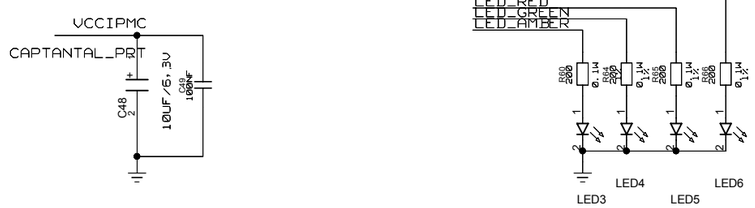

	NAME	DATE	SIGN
CHECKED	J. V.DE SOUZA		
CHECKED	U.SCHAEFER		
CHECKED	S.RAVE		
DRAWN	BAUSS	30.10.2015	

BLOCK TITLE IPMC

DRAWING TITLE

IPMC CONTROL

UNIVERSITY OF MAINZ

SIZE C | REV. | DRAWING NO.

SCALE | SHEET OF

REVISIONS				
ZONE	LTR	DESCRIPTION	DATE	APPR.

IPMC JTAG PORT FRONTPANEL

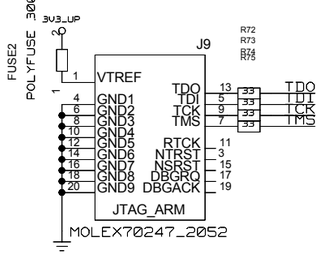

MEMORY

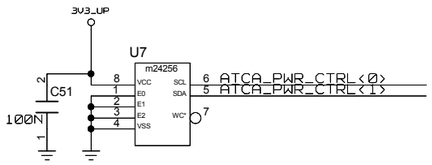

I2C FPGA TEMPERATURE

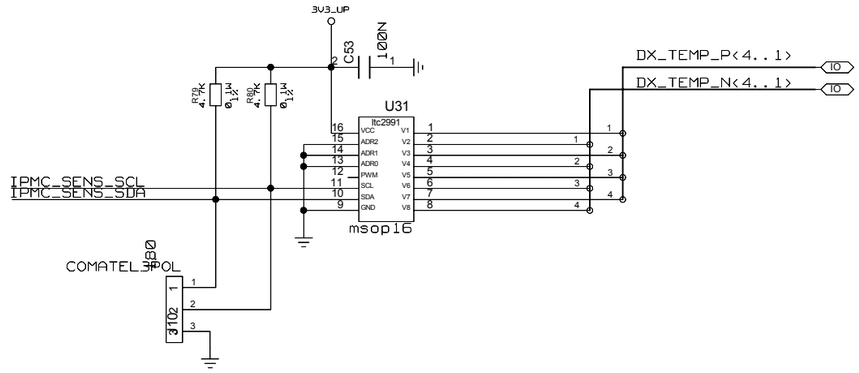

I2C BOARDTEMP

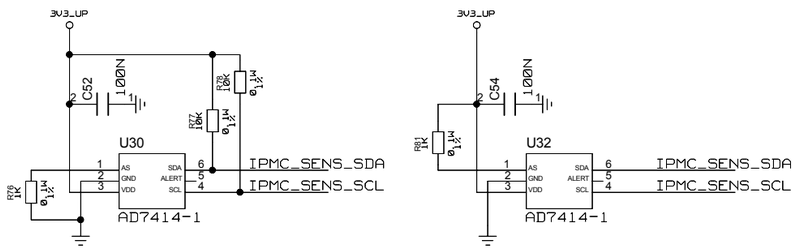

	NAME	DATE	SIGN
CHECKED	J. V.DE SOUZA		
CHECKED	U.SCHAEFER		
CHECKED	S.RAVE		
DRAWN	BAUSS	23.07.2015	

BLOCK TITLE: IPMC

DRAWING TITLE: IPMC CONTROL

UNIVERSITY OF MAINZ

SIZE: C | REV. | DRAWING NO.

SCALE | SHEET OF

REVISIONS				
ZONE	LTR	DESCRIPTION	DATE	APPR.

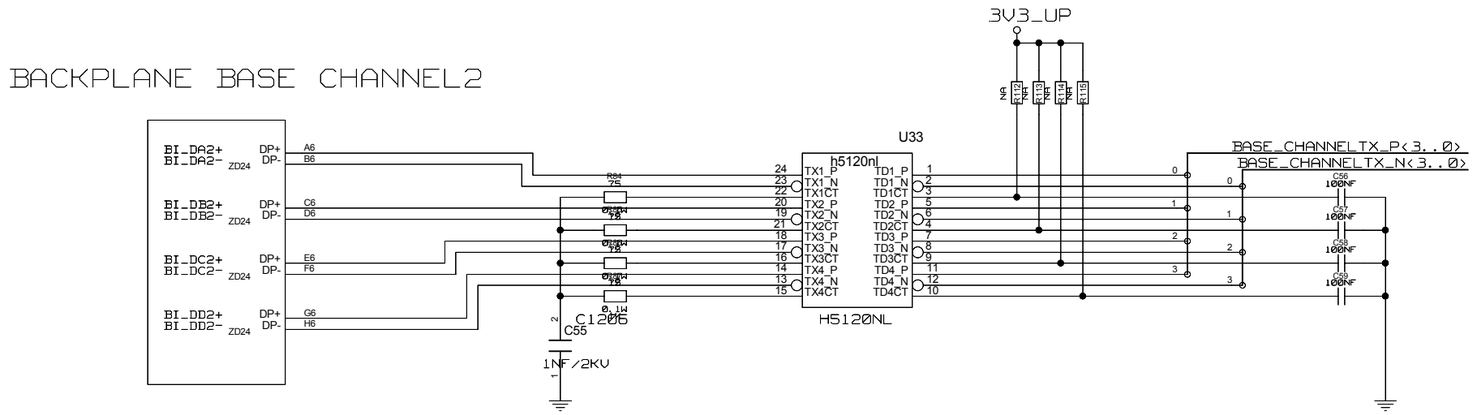

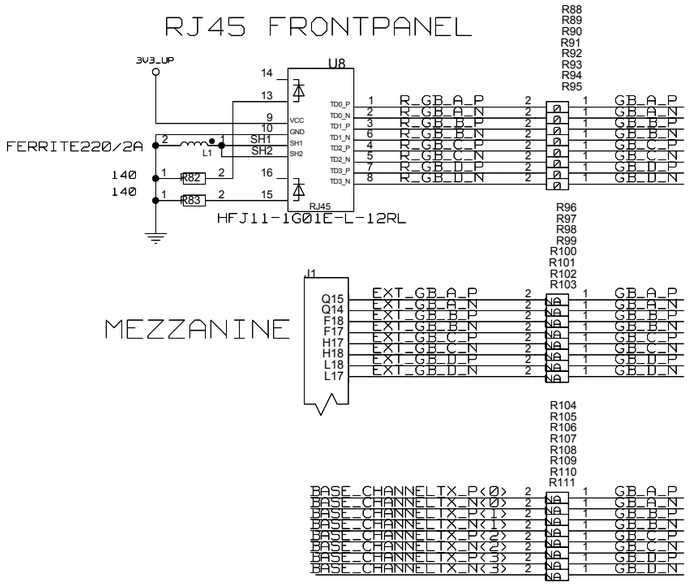

	NAME	DATE	SIGN
CHECKED	J. V.DE SOUZA		
CHECKED	U.SCHAEFER		
CHECKED	S.RAVE		
DRAWN	BAUSS		

BLOCK TITLE
IPMC

DRAWING TITLE
IPMC CONTROL

UNIVERSITY OF MAINZ

SIZE C | REV. | DRAWING NO.

SCALE | SHEET OF

REVISIONS				
ZONE	LTR	DESCRIPTION	DATE	APPR.

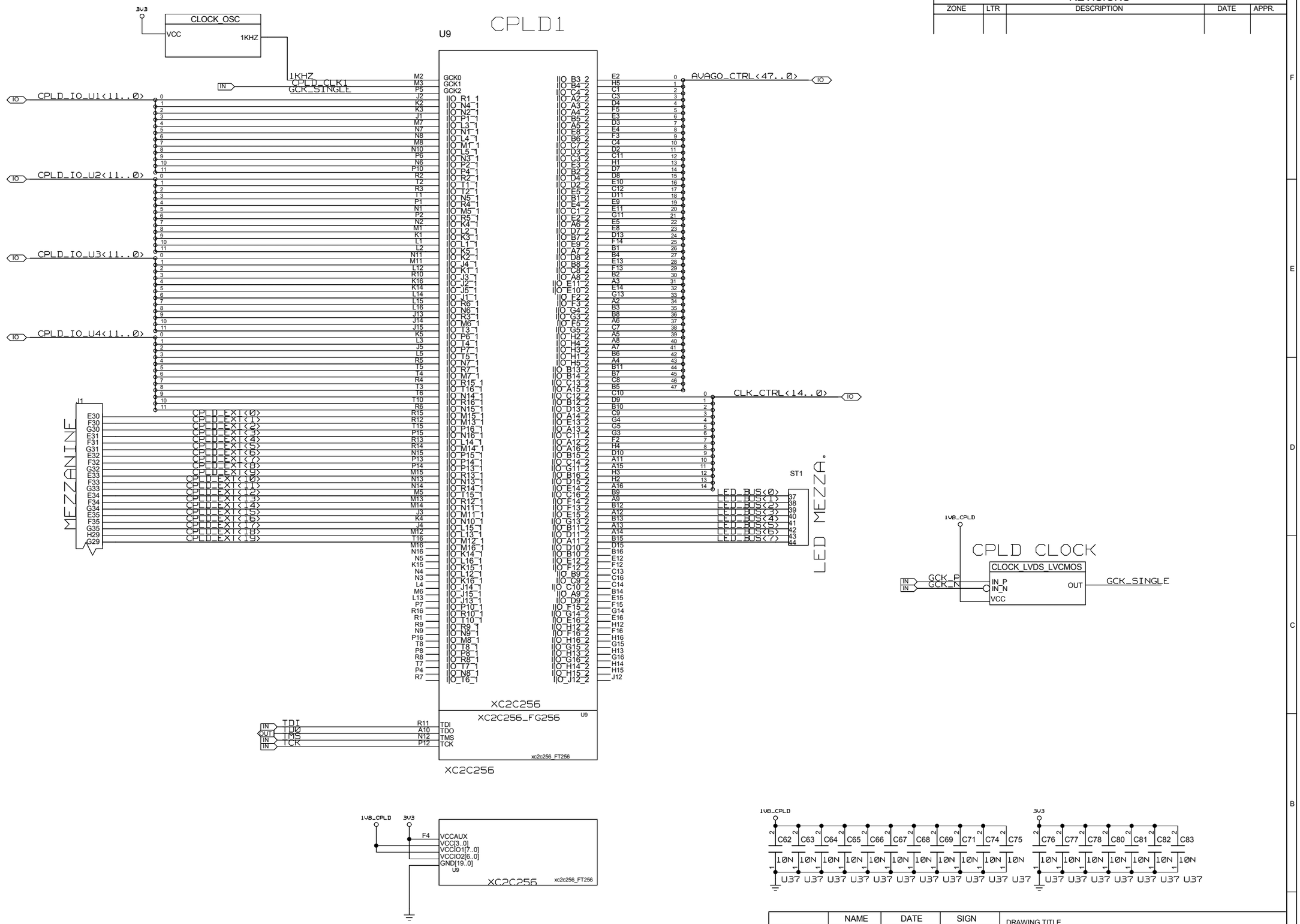

	NAME	DATE	SIGN
CHECKED	J. V.DE SOUZA		
CHECKED	U.SCHAEFER		
CHECKED	S.RAVE		
DRAWN	BAUSS	22.07.2015	

BLOCK TITLE: CPLD

DRAWING TITLE: CONTROL AND CONFIG CPLD

UNIVERSITY OF MAINZ

SIZE: C | REV. | DRAWING NO.

SCALE | SHEET 1 OF 1

REVISIONS				
ZONE	LTR	DESCRIPTION	DATE	APPR.

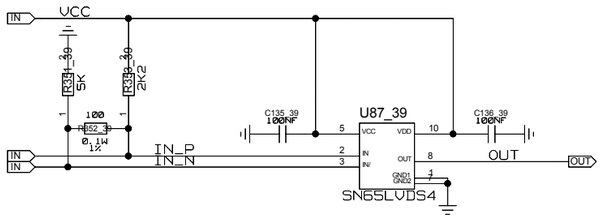

	NAME	DATE	SIGN
CHECKED	J. V.DE SOUZA		
CHECKED	U.SCHAEFER		
CHECKED	S.RAVE		
DRAWN	BAUSS		

BLOCK TITLE
CLOCK_LVDS_LVCMOS

DRAWING TITLE
JFEX

UNIVERSITY OF MAINZ

SIZE C | REV. | DRAWING NO.

SCALE | SHEET OF

REVISIONS				
ZONE	LTR	DESCRIPTION	DATE	APPR.

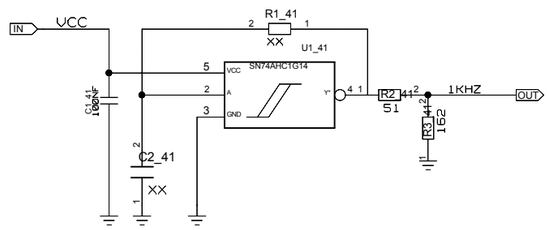

	NAME	DATE	SIGN
CHECKED	J. V.DE SOUZA		
CHECKED	U.SCHAEFER		
CHECKED	S.RAVE		
DRAWN	BAUSS		
BLOCK TITLE			

DRAWING TITLE

UNIVERSITY OF MAINZ

SIZE C | REV. | DRAWING NO.

SCALE | SHEET OF

REVISIONS				
ZONE	LTR	DESCRIPTION	DATE	APPR.

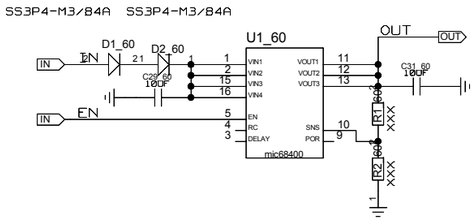

	NAME	DATE	SIGN
CHECKED	J. V.DE SOUZA		
CHECKED	U.SCHAEFER		
CHECKED	S.RAVE		
DRAWN	BAUSS		

BLOCK TITLE
POWERSUPPLY_MIC68400

DRAWING TITLE

UNIVERSITY OF MAINZ

SIZE C | REV. | DRAWING NO.

SCALE | SHEET OF

REVISIONS				
ZONE	LTR	DESCRIPTION	DATE	APPR.

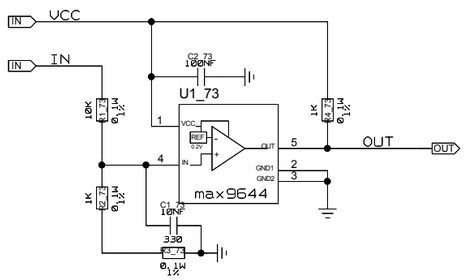

	NAME	DATE	SIGN
CHECKED	J. V.DE SOUZA		
CHECKED	U.SCHAEFER		
CHECKED	S.RAVE		
DRAWN	BAUSS		

BLOCK TITLE

DRAWING TITLE

UNIVERSITY OF MAINZ

SIZE C | REV. | DRAWING NO.

SCALE | SHEET OF

REVISIONS				
ZONE	LTR	DESCRIPTION	DATE	APPR.

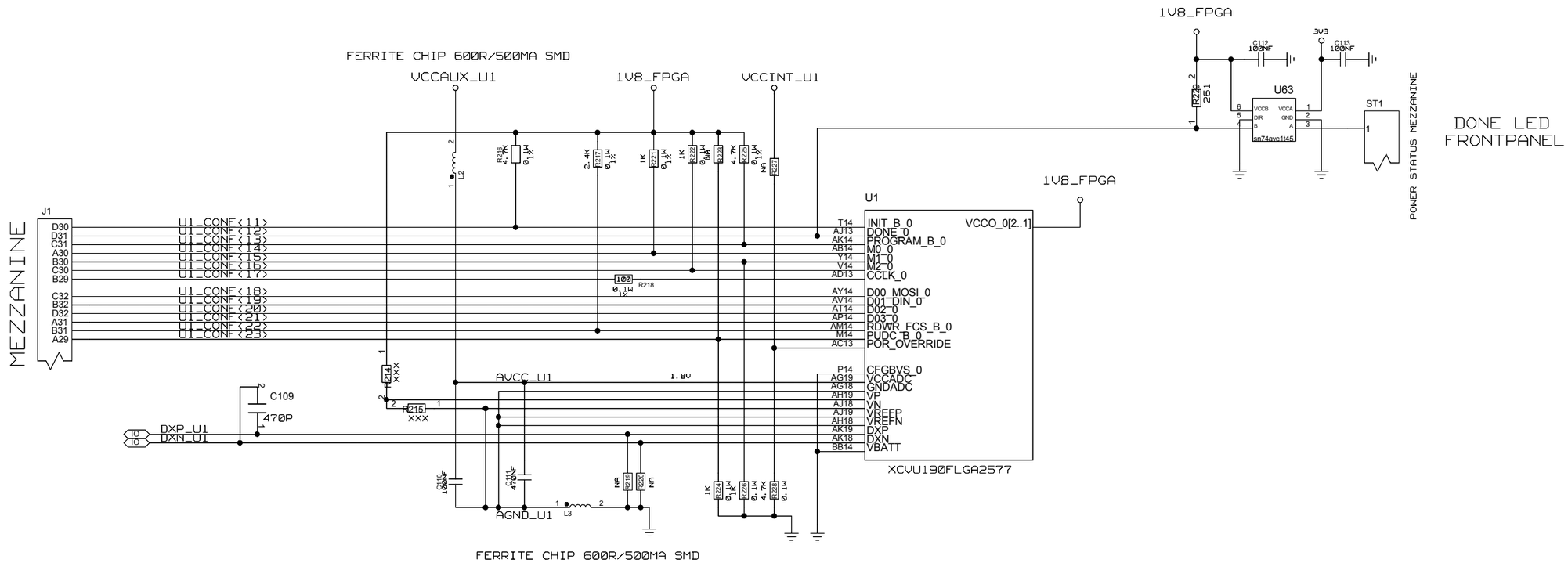

	NAME	DATE	SIGN
CHECKED	J. V.DE SOUZA		
CHECKED	U.SCHAEFER		
CHECKED	S.RAVE		
DRAWN	BAUSS	17.09.2015	

BLOCK TITLE
CONFIGURATION PROCESSOR U1

DRAWING TITLE
JFEX

UNIVERSITY OF MAINZ

SIZE C | REV. | DRAWING NO.

SCALE | SHEET 1 OF 1

REVISIONS				
ZONE	LTR	DESCRIPTION	DATE	APPR.

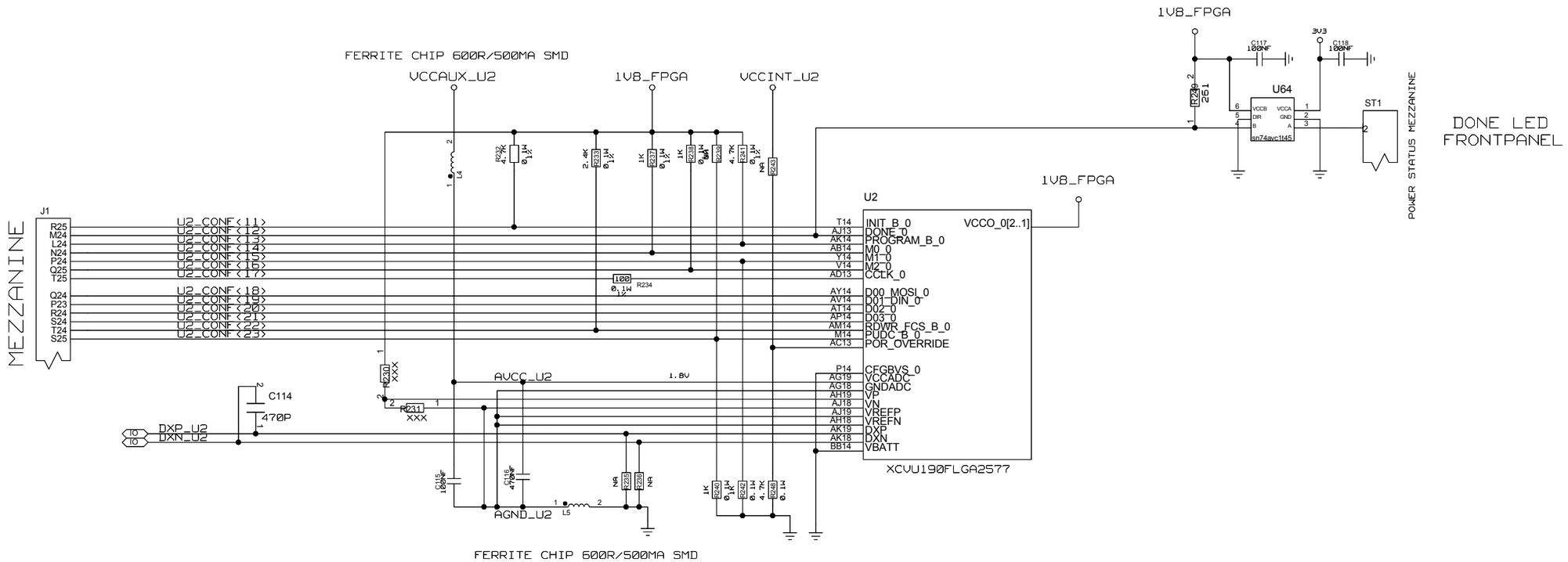

	NAME	DATE	SIGN
CHECKED	J. V.DE SOUZA		
CHECKED	U.SCHAEFER		
CHECKED	S.RAVE		
DRAWN	BAUSS		
BLOCK TITLE			

DRAWING TITLE

UNIVERSITY OF MAINZ

SIZE C | REV. | DRAWING NO.

SCALE | SHEET OF

REVISIONS				
ZONE	LTR	DESCRIPTION	DATE	APPR.

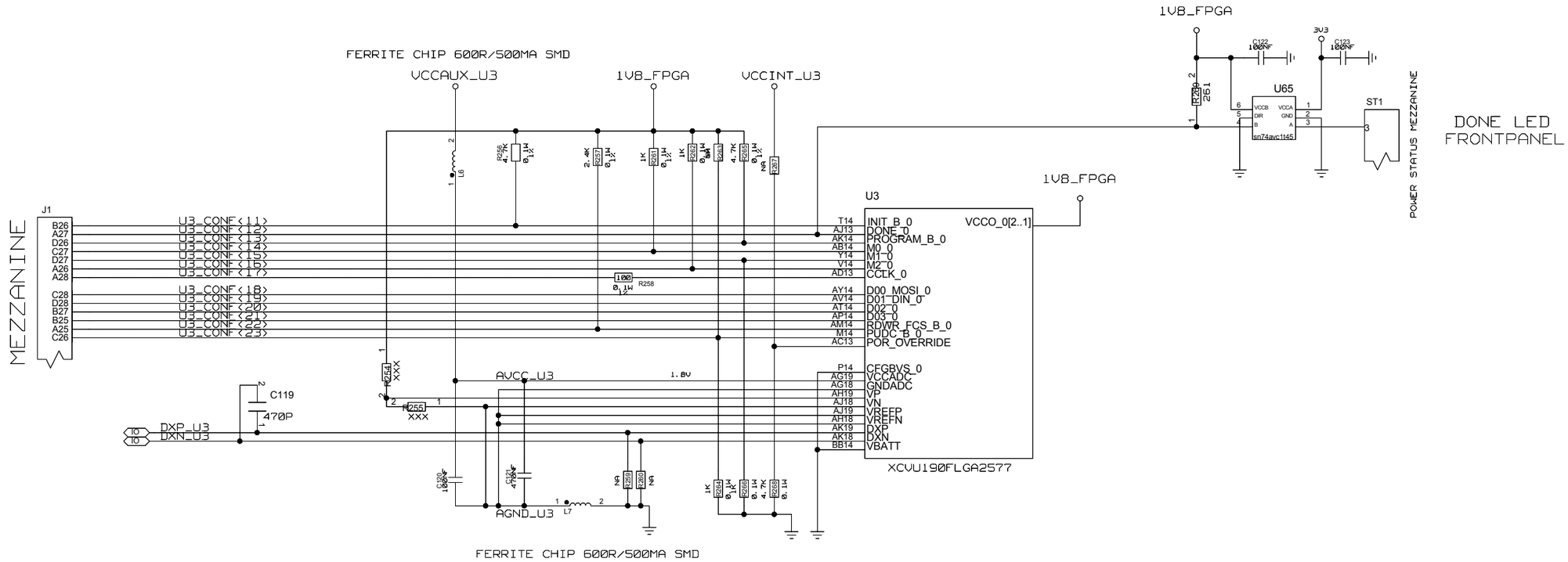

	NAME	DATE	SIGN
CHECKED	J. V.DE SOUZA		
CHECKED	U.SCHAEFER		
CHECKED	S.RAVE		
DRAWN	BAUSS		
BLOCK TITLE			

DRAWING TITLE

UNIVERSITY OF MAINZ

SIZE C | REV. | DRAWING NO.

SCALE | SHEET OF

REVISIONS				
ZONE	LTR	DESCRIPTION	DATE	APPR.

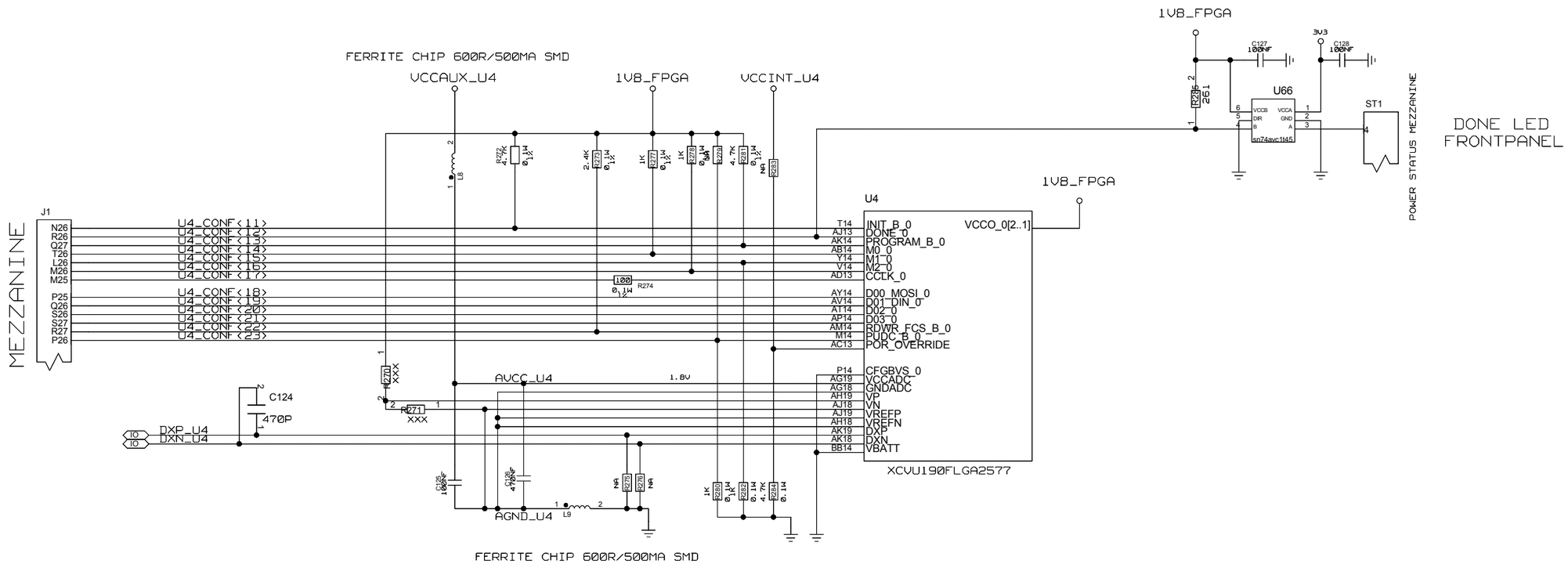

	NAME	DATE	SIGN
CHECKED	J. V.DE SOUZA		
CHECKED	U.SCHAEFER		
CHECKED	S.RAVE		
DRAWN	BAUSS		
BLOCK TITLE			

DRAWING TITLE

UNIVERSITY OF MAINZ

SIZE C | REV. | DRAWING NO.

SCALE | SHEET OF

REVISIONS				
ZONE	LTR	DESCRIPTION	DATE	APPR.

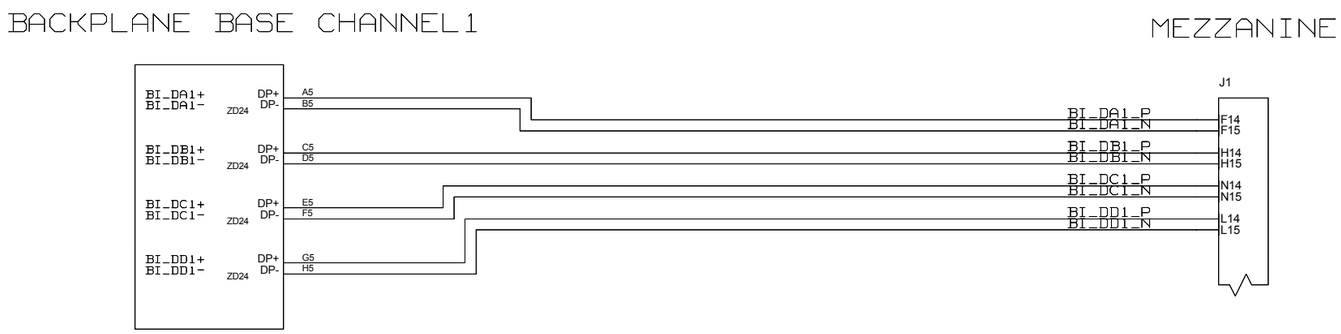

	NAME	DATE	SIGN
CHECKED	J. V.DE SOUZA		
CHECKED	U.SCHAEFER		
CHECKED	S.RAVE		
DRAWN	BAUSS	05.11.2015	

BLOCK TITLE: IPBUS

DRAWING TITLE: IPBUS

UNIVERSITY OF MAINZ

SIZE: C | REV. | DRAWING NO.

SCALE | SHEET OF

REVISIONS				
ZONE	LTR	DESCRIPTION	DATE	APPR.

LEVELTRANSLATOR

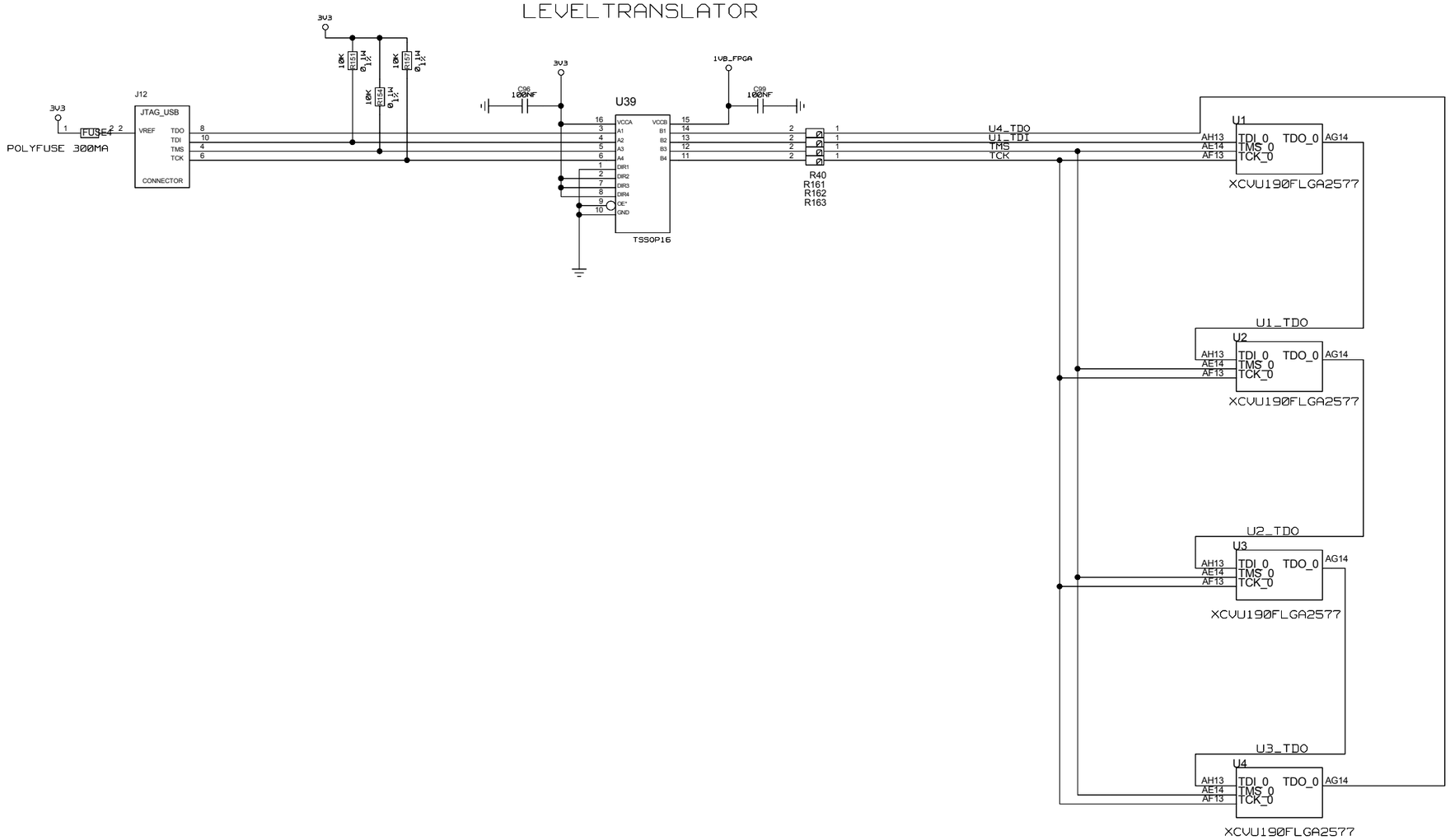

	NAME	DATE	SIGN
CHECKED	J. V.DE SOUZA		
CHECKED	U.SCHAEFER		
CHECKED	S.RAVE		
DRAWN	BAUSS	08.06.2017	

BLOCK TITLE: JTAG

DRAWING TITLE: JTAG CHAIN

UNIVERSITY OF MAINZ

SIZE: C | REV. | DRAWING NO.

SCALE | SHEET OF