REVISIONS				
ZONE	LTR	DESCRIPTION	DATE	APPR.

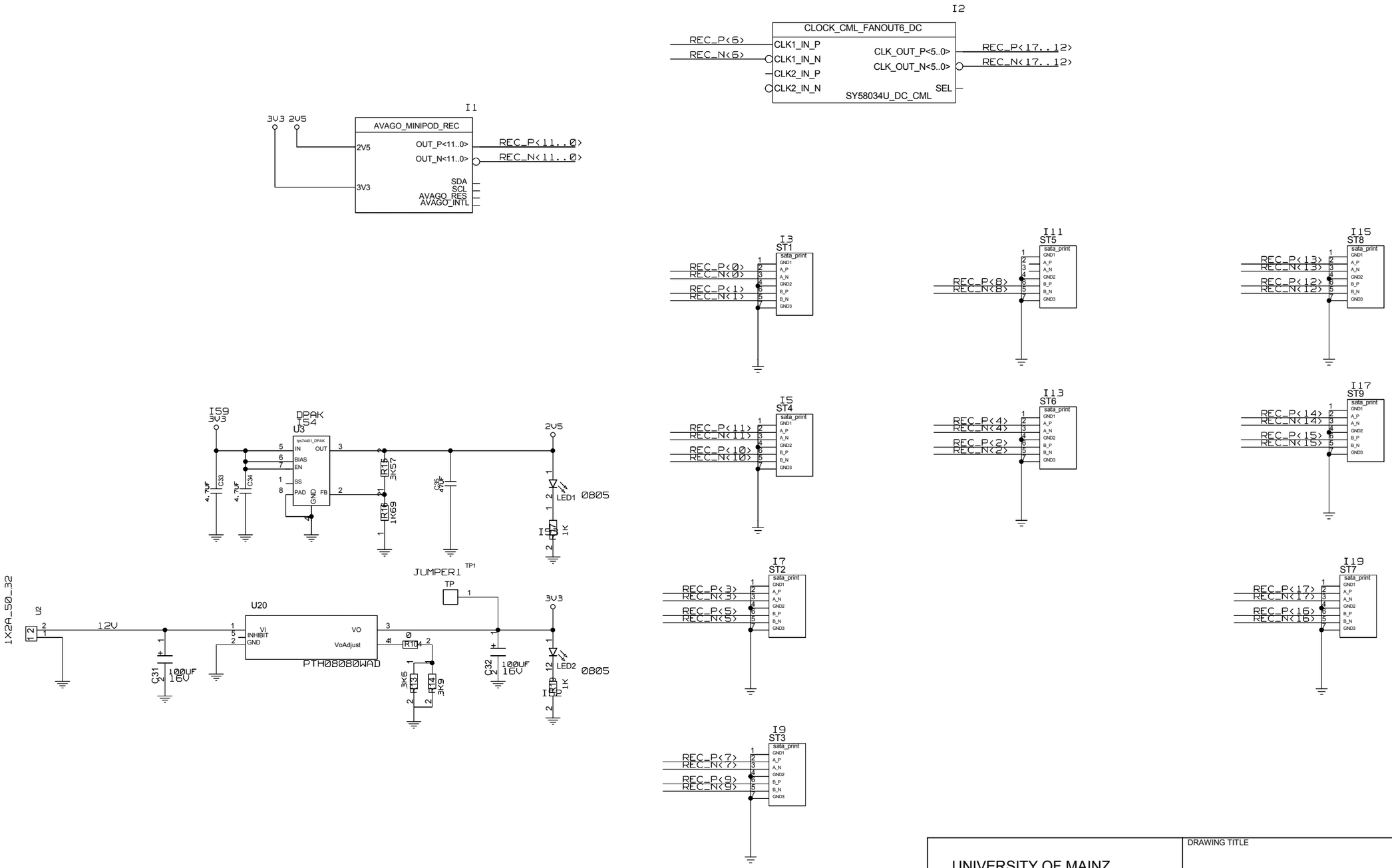

UNIVERSITY OF MAINZ

DRAWING TITLE

SIZE C | REV. | DRAWING NO.

SCALE | SHEET OF

REVISIONS				
ZONE	LTR	DESCRIPTION	DATE	APPR.

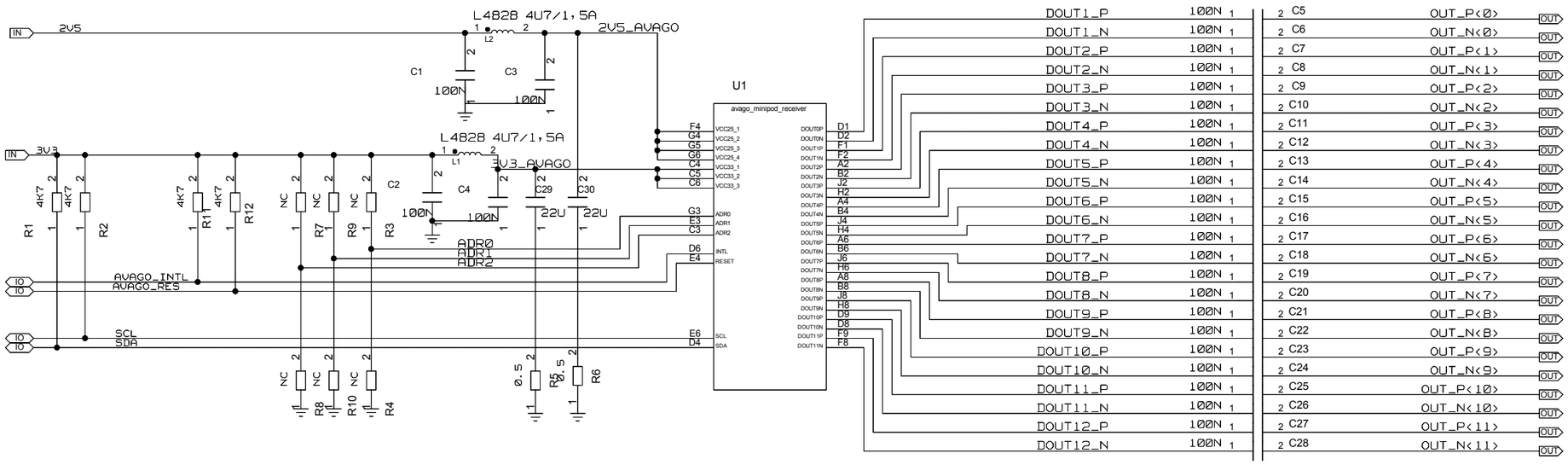

UNIVERSITY OF MAINZ	DRAWING TITLE: AVAGO RECEIVER		
	SIZE: C	REV.	DRAWING NO.
	SCALE		SHEET OF

REVISIONS				
ZONE	LTR	DESCRIPTION	DATE	APPR.

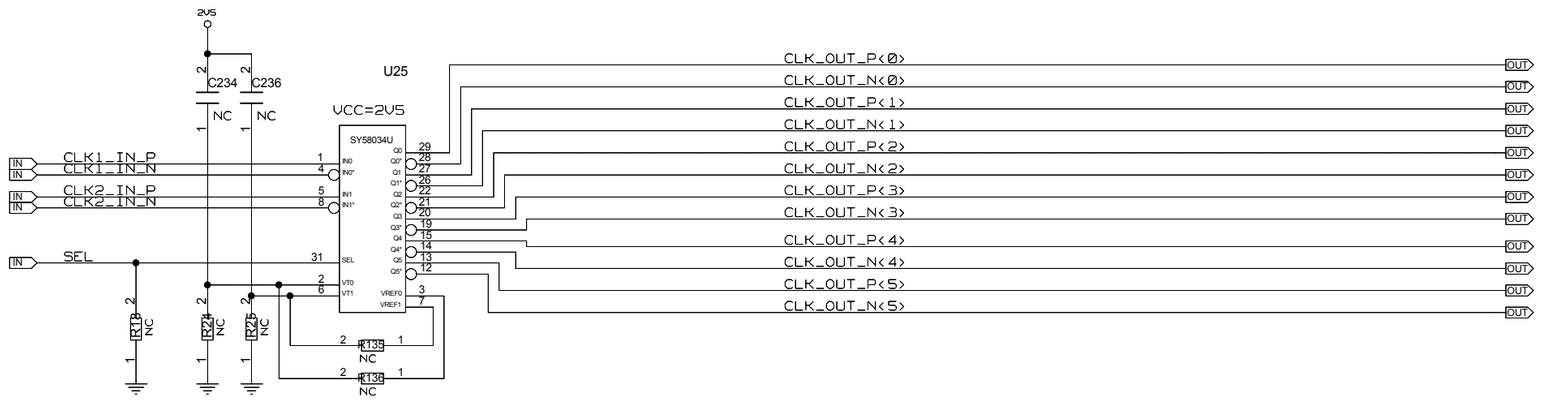

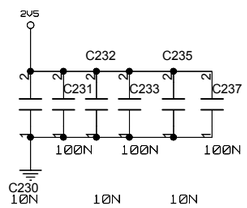

UNIVERSITY OF MAINZ	DRAWING TITLE: CLOCK_CML_FANOUT6_DC		
	SIZE: C	REV.	DRAWING NO.
	SCALE		SHEET OF