REVISIONS				
ZONE	LTR	DESCRIPTION	DATE	APPR.

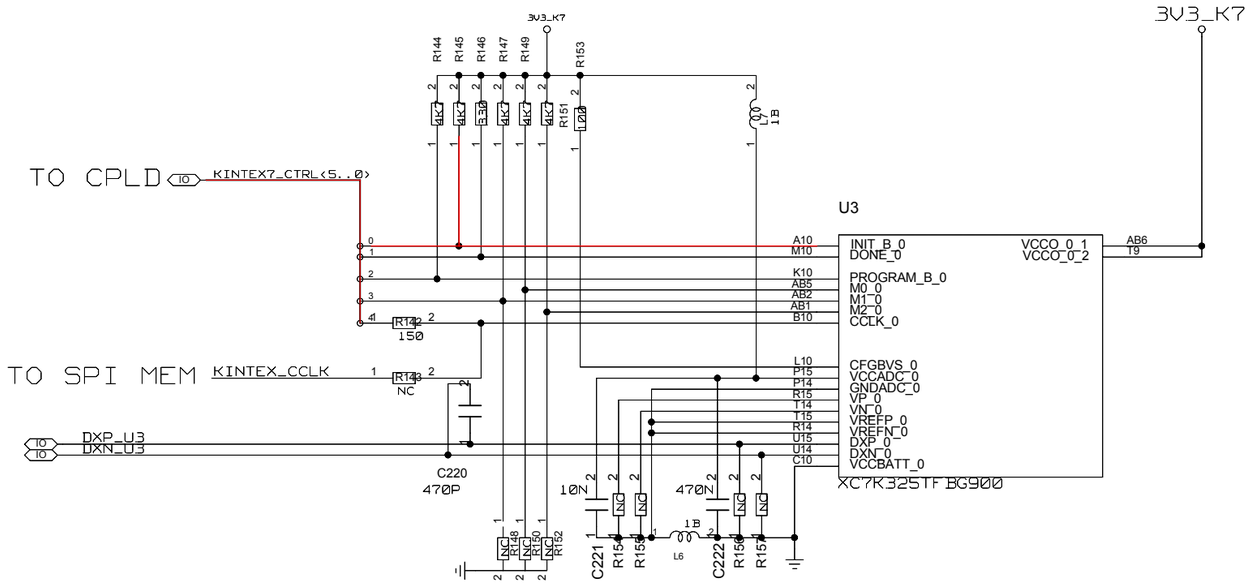

UNIVERSITY OF MAINZ	DRAWING TITLE: CONTROL		
BLOCK: CONTROL KINTEX7 CONTROL	SIZE: C	REV.	DRAWING NO.
	SCALE		SHEET OF

REVISIONS				
ZONE	LTR	DESCRIPTION	DATE	APPR.

PUDC PULLUP ACHTUNG PINSWAP
PIN = R23

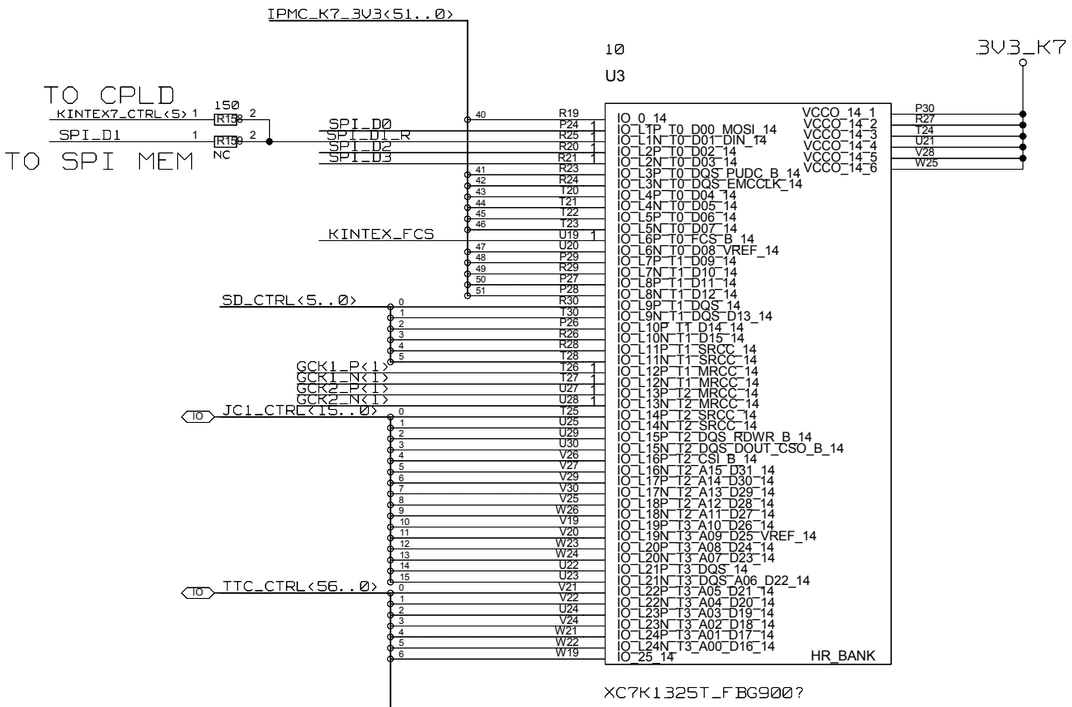

BANK14 VCCO ABHAENGIG VON SPI SPANNUNG

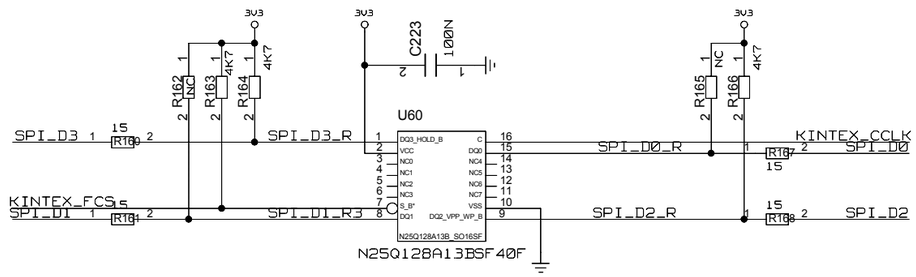

QSPI

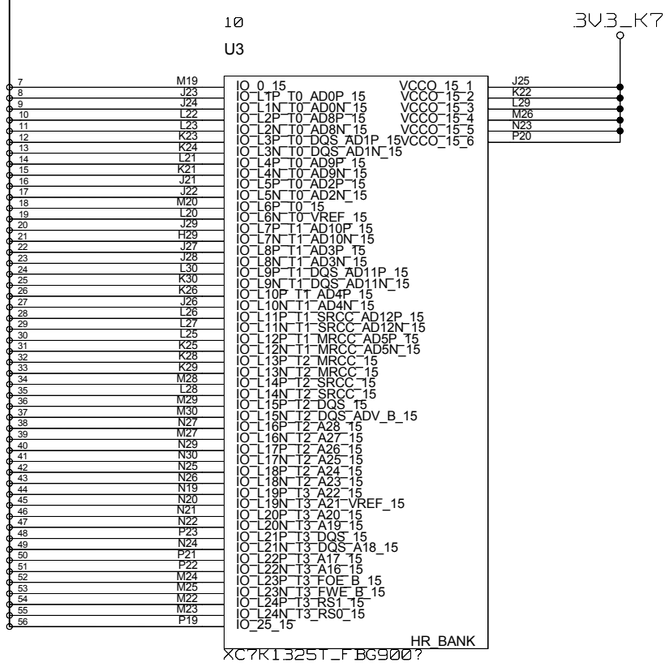

SD-CARD

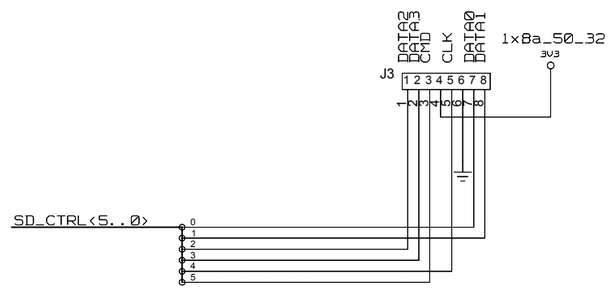

UNIVERSITY OF MAINZ	DRAWING TITLE: SD, JITTERCLEANER, TTC, QSPI CONTROL	
BLOCK: CONTROL KINTEX7 CONTROL	SIZE: C	REV. / DRAWING NO.
	SCALE	SHEET OF