REVISIONS

ZONE	LTR	DESCRIPTION	DATE	APPR.

UNIVERSITY OF MAINZ

DRAWING TITLE

SIZE C

REV.

DRAWING NO.

SCALE

SHEET OF

REVISIONS				
ZONE	LTR	DESCRIPTION	DATE	APPR.

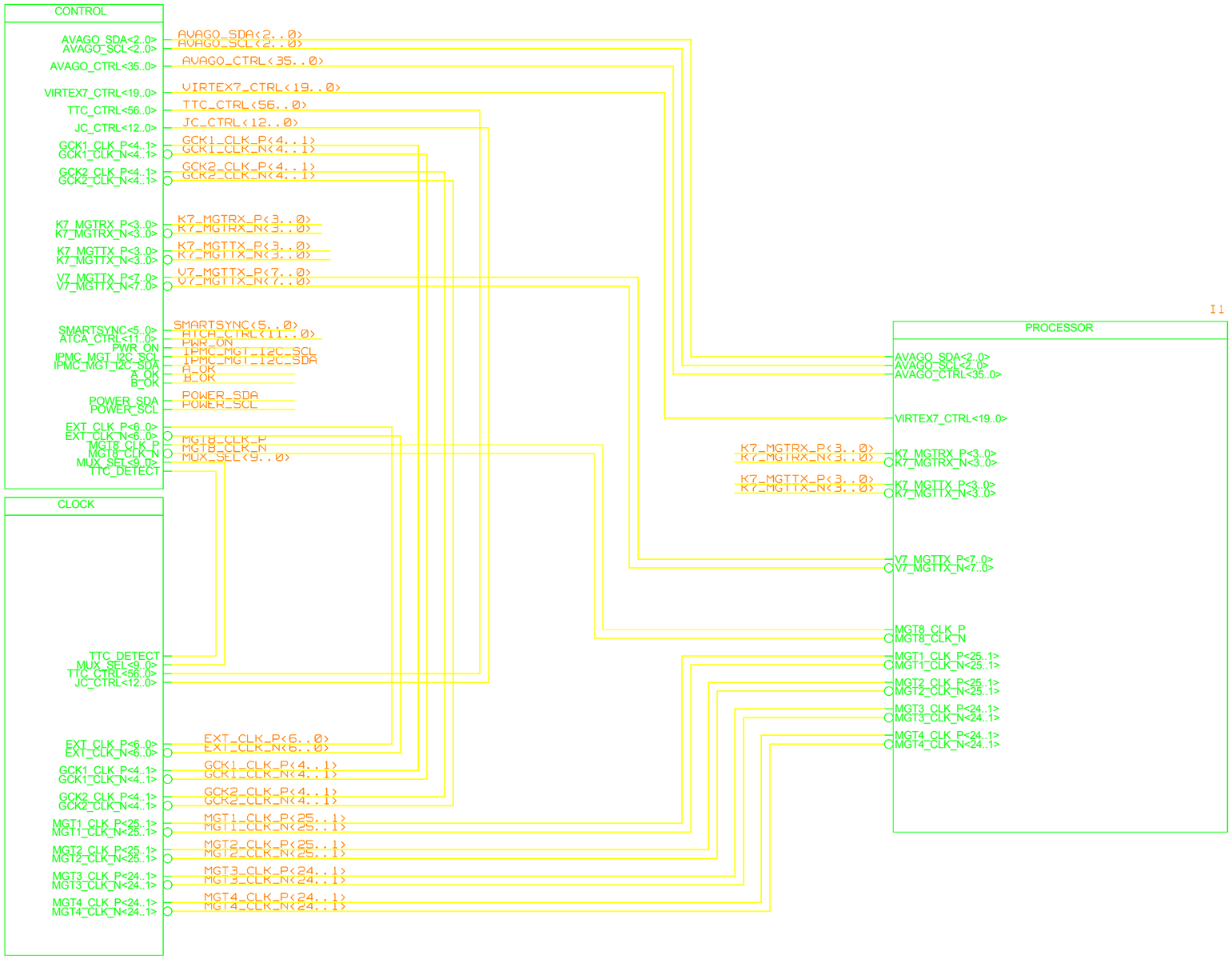

UNIVERSITY OF MAINZ

DRAWING TITLE: L1TOPO PRODUCTION

SIZE: C | REV. | DRAWING NO.

SCALE | SHEET OF

REVISIONS				
ZONE	LTR	DESCRIPTION	DATE	APPR.

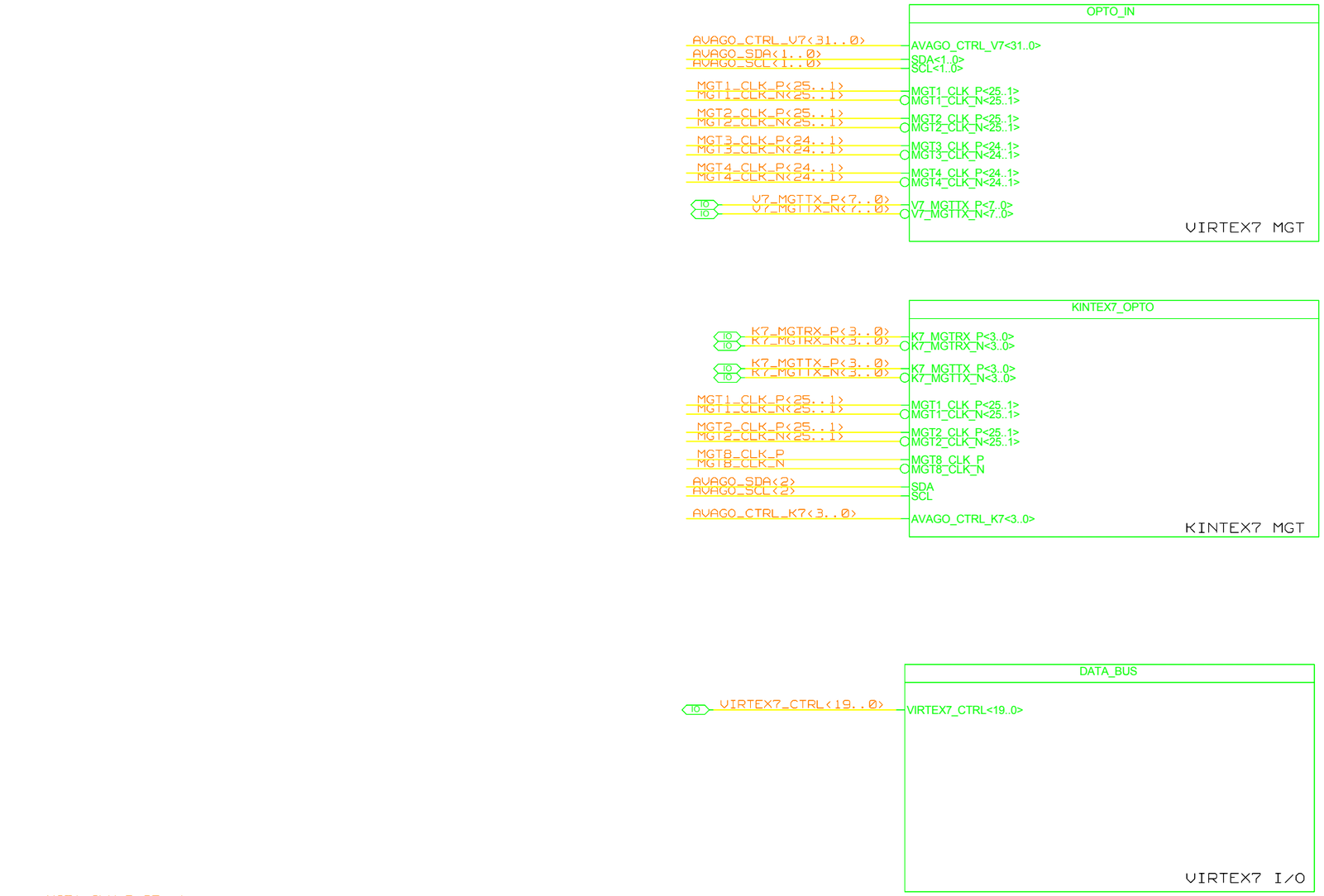

UNIVERSITY OF MAINZ

BLOCK: PROCESSOR

DRAWING TITLE: OPTO INPUT AND DATA

SIZE: C | REV. | DRAWING NO.

SCALE | SHEET OF

REVISIONS				
ZONE	LTR	DESCRIPTION	DATE	APPR.

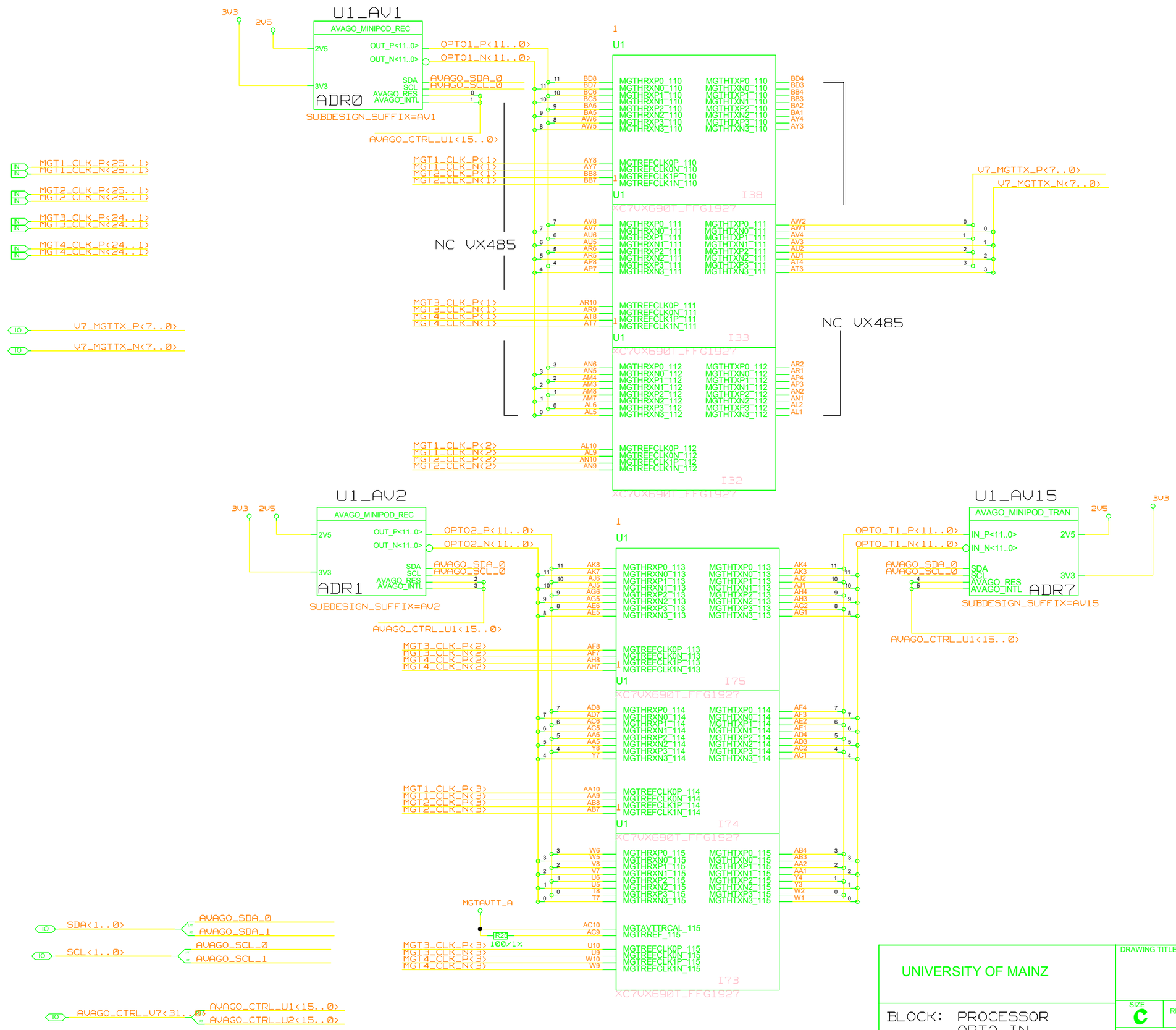

UNIVERSITY OF MAINZ

BLOCK: PROCESSOR OPTO_IN

DRAWING TITLE: OPTO INPUT OPTO OUTPUT

SIZE: C | REV. | DRAWING NO.

SCALE | SHEET OF

REVISIONS				
ZONE	LTR	DESCRIPTION	DATE	APPR.

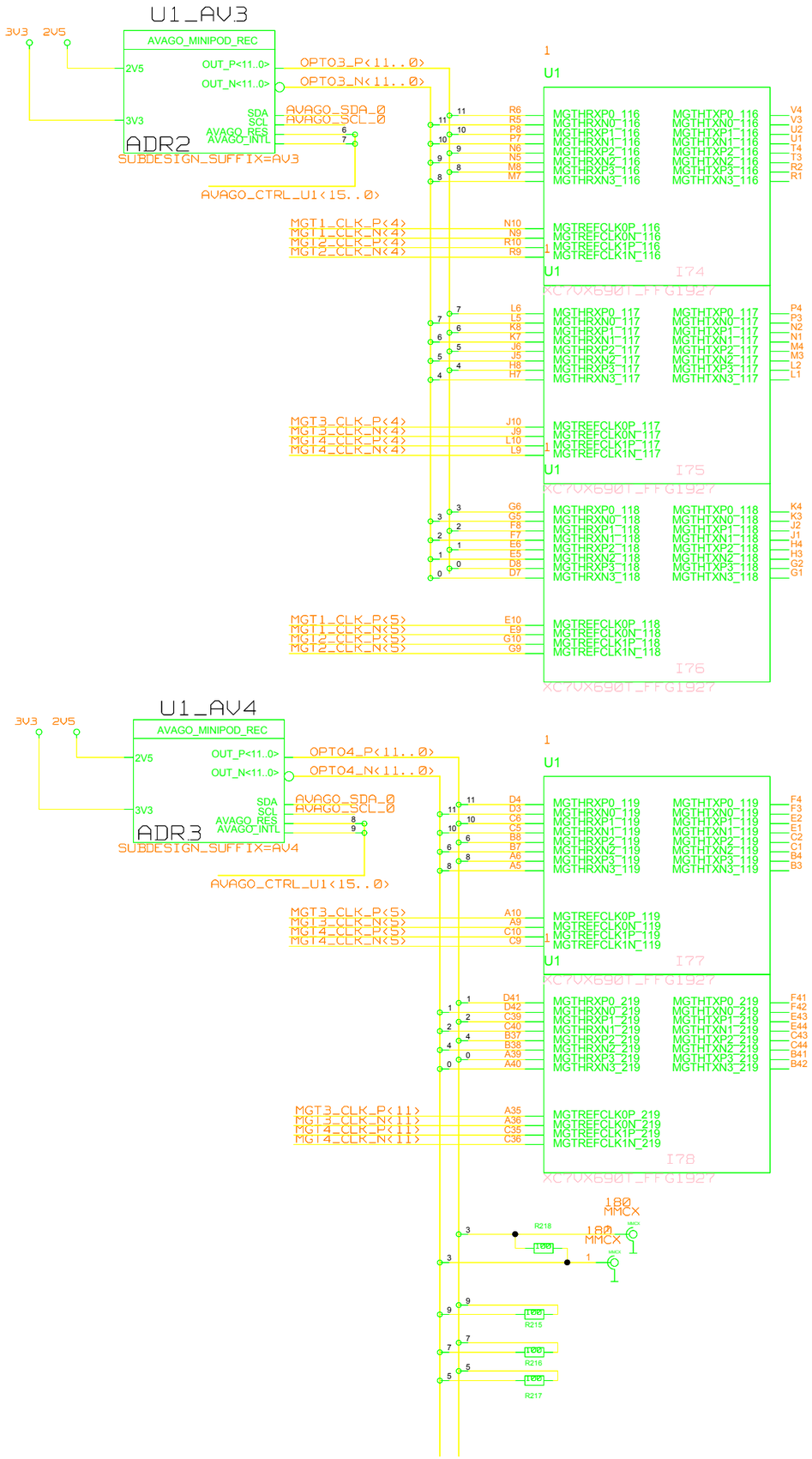

UNIVERSITY OF MAINZ

BLOCK: PROCESSOR OPTO_IN

DRAWING TITLE: OPTO INPUT

SIZE: C | REV. | DRAWING NO.

SCALE | SHEET OF

REVISIONS				
ZONE	LTR	DESCRIPTION	DATE	APPR.

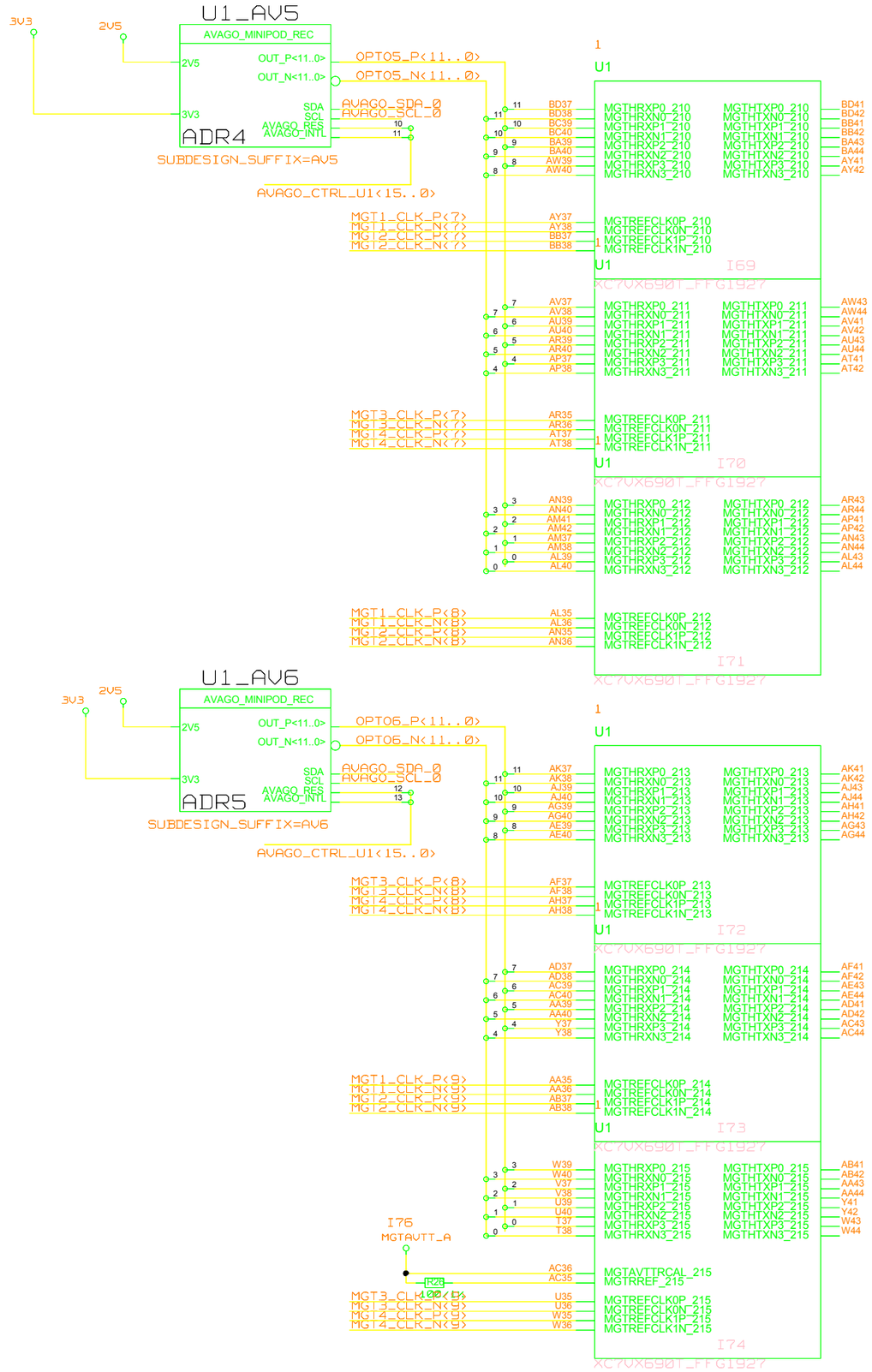

UNIVERSITY OF MAINZ	DRAWING TITLE: OPTO INPUT	
BLOCK: PROCESSOR OPTO_IN	SIZE: C	REV. / DRAWING NO.
	SCALE	SHEET OF

REVISIONS				
ZONE	LTR	DESCRIPTION	DATE	APPR.

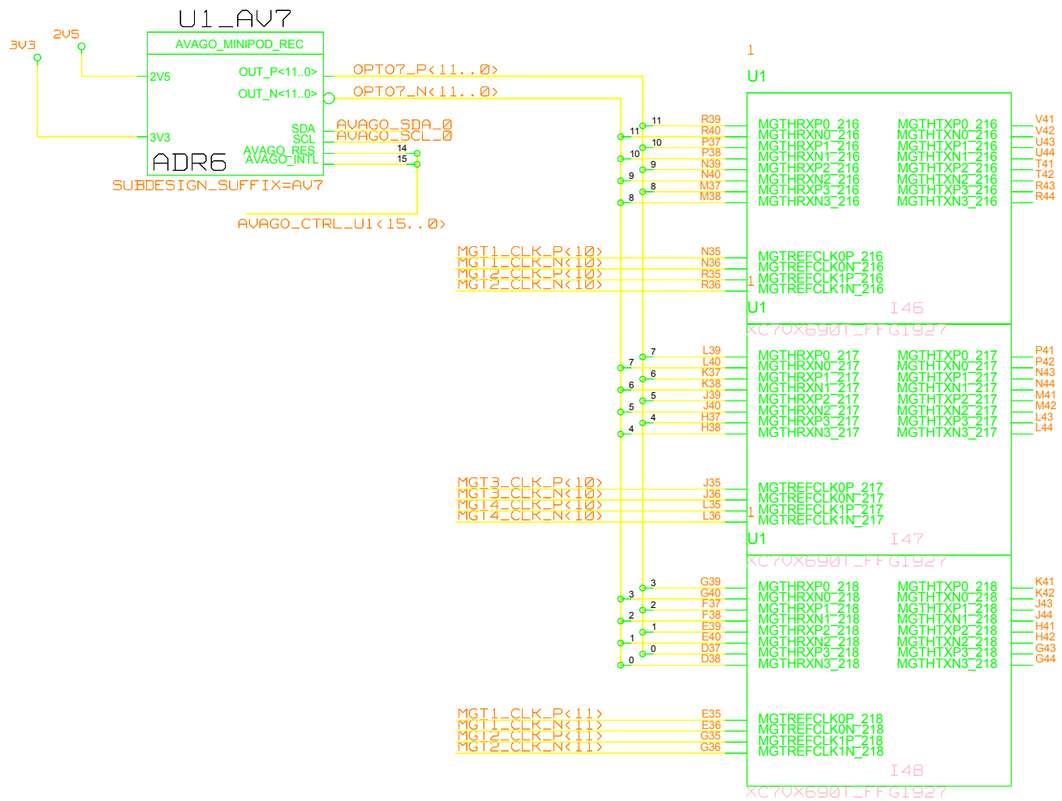

UNIVERSITY OF MAINZ

BLOCK: PROCESSOR
OPTO_IN

DRAWING TITLE: OPTO INPUT

SIZE: C | REV. | DRAWING NO.

SCALE | SHEET OF

REVISIONS				
ZONE	LTR	DESCRIPTION	DATE	APPR.

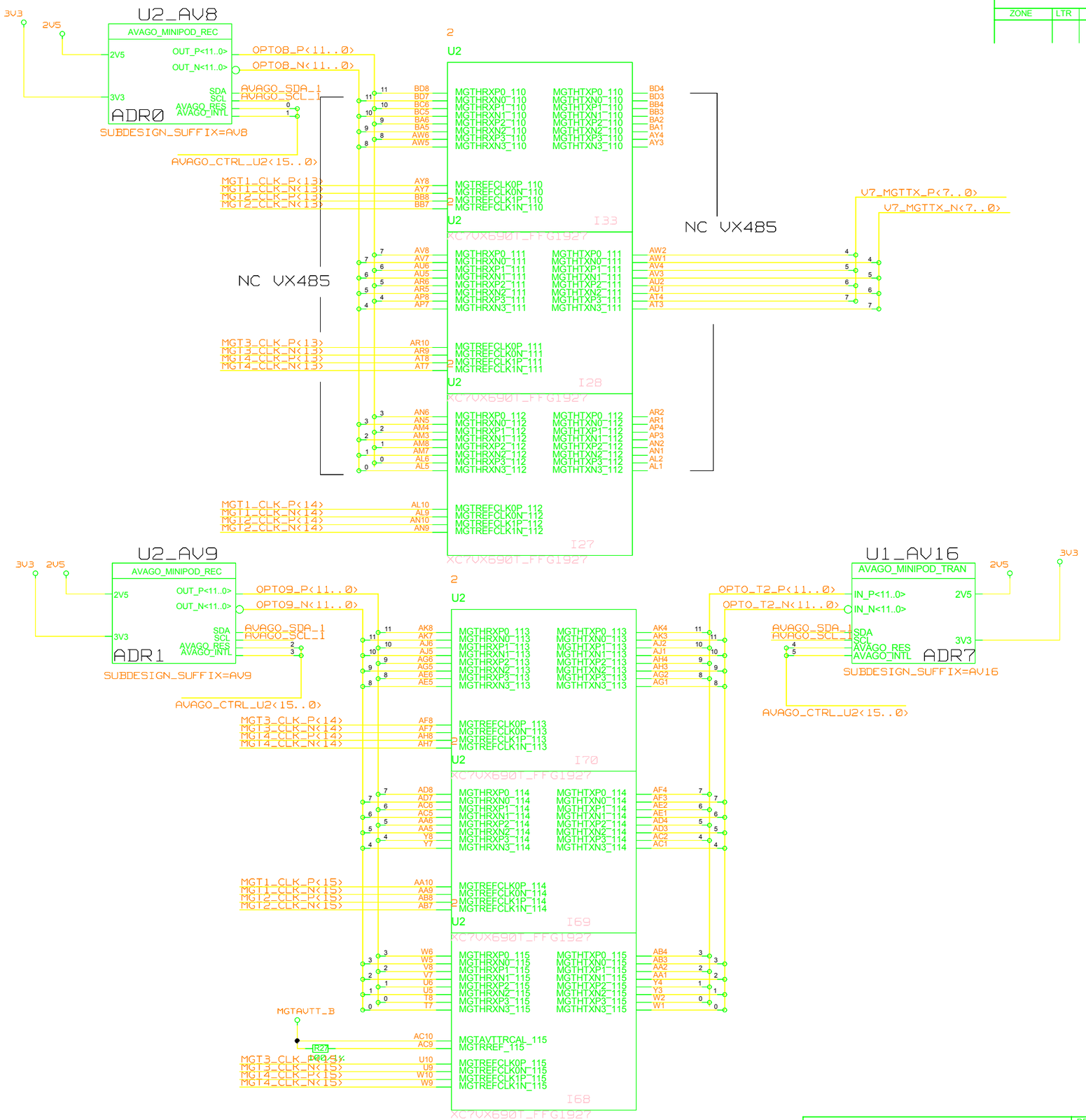

UNIVERSITY OF MAINZ	DRAWING TITLE: OPTO INPUT OPTO OUTPUT	B
BLOCK: PROCESSOR OPTO_IN	SIZE: C	REV. / DRAWING NO.
	SCALE	SHEET OF

REVISIONS				
ZONE	LTR	DESCRIPTION	DATE	APPR.

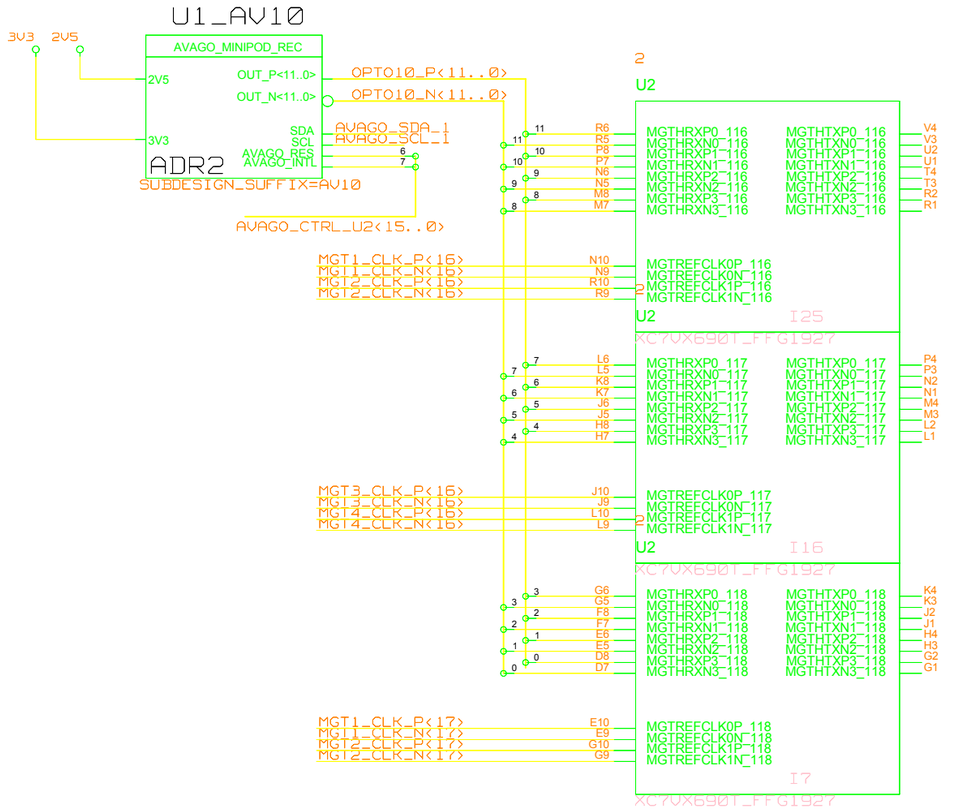

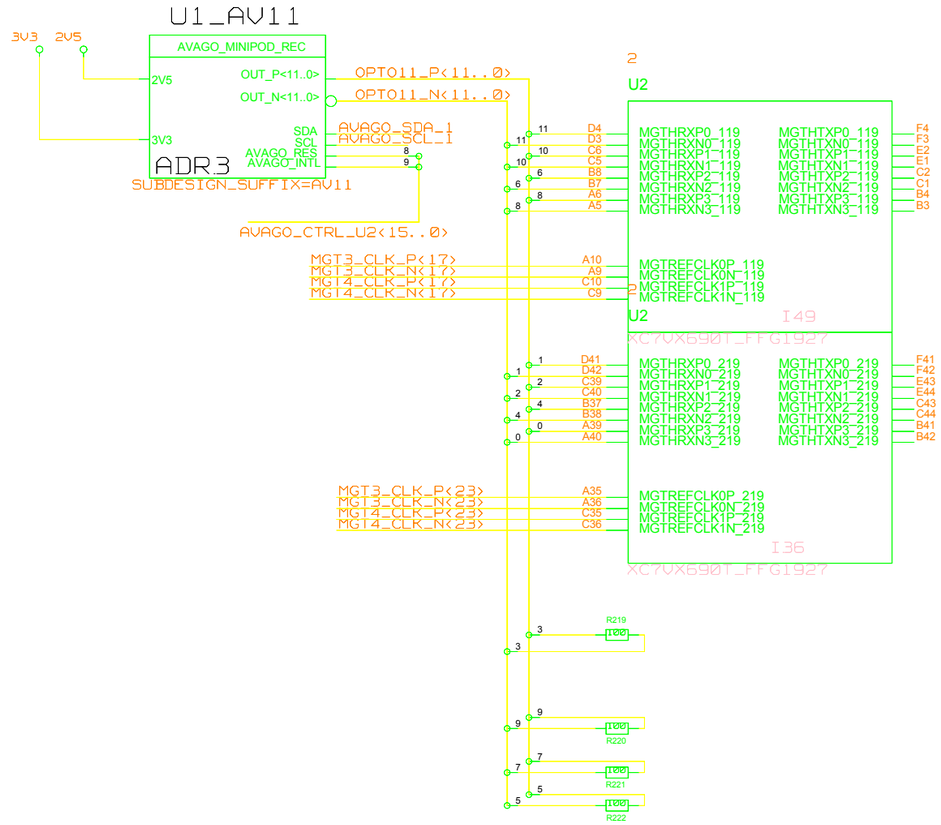

UNIVERSITY OF MAINZ

BLOCK: PROCESSOR
OPTO_IN

DRAWING TITLE: OPTO INPUT B

SIZE: C | REV. | DRAWING NO.

SCALE | SHEET OF

REVISIONS				
ZONE	LTR	DESCRIPTION	DATE	APPR.

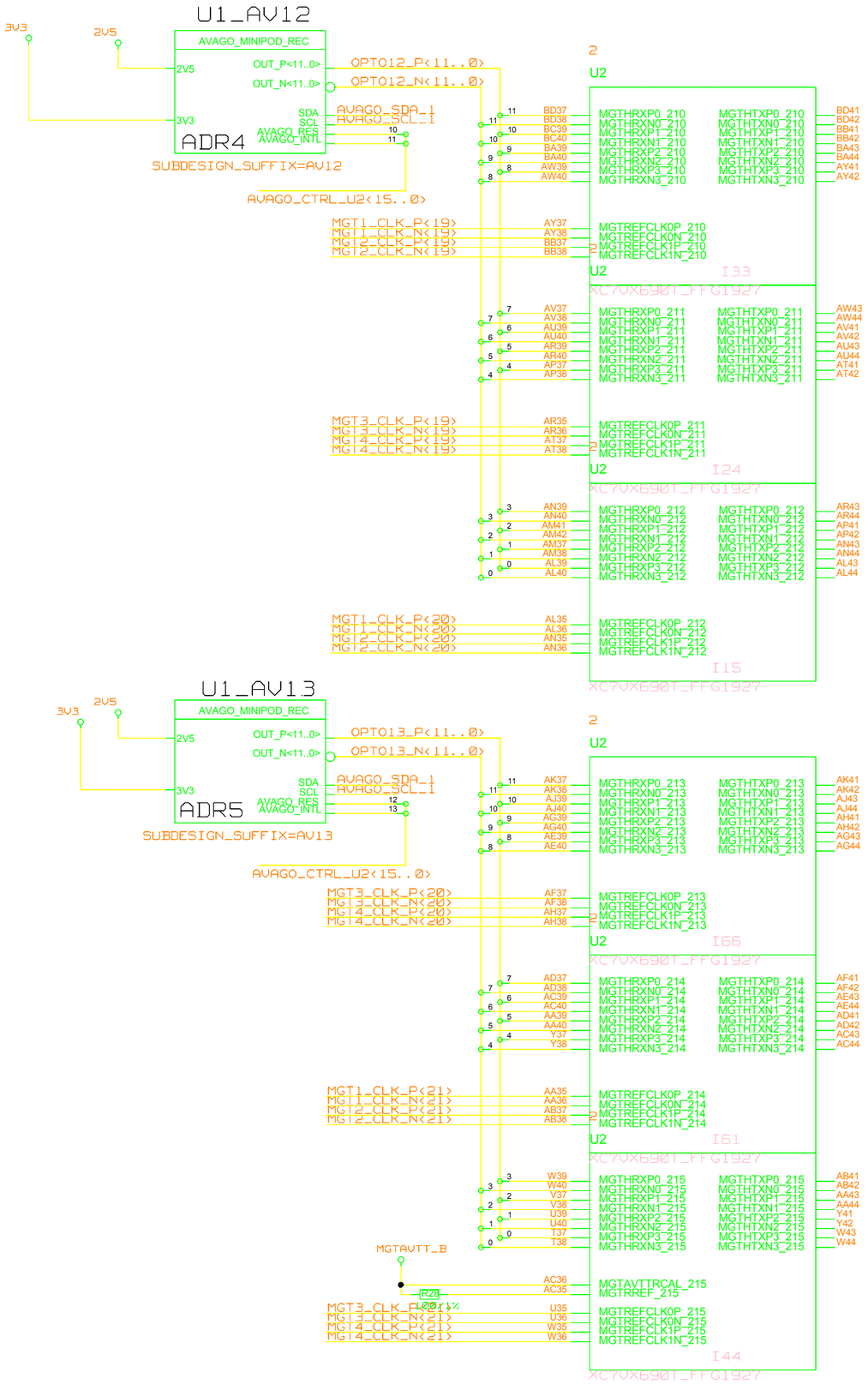

UNIVERSITY OF MAINZ

BLOCK: PROCESSOR OPTO_IN

DRAWING TITLE: OPTO INPUT B

SIZE: C | REV. | DRAWING NO.

SCALE | SHEET OF

REVISIONS				
ZONE	LTR	DESCRIPTION	DATE	APPR.

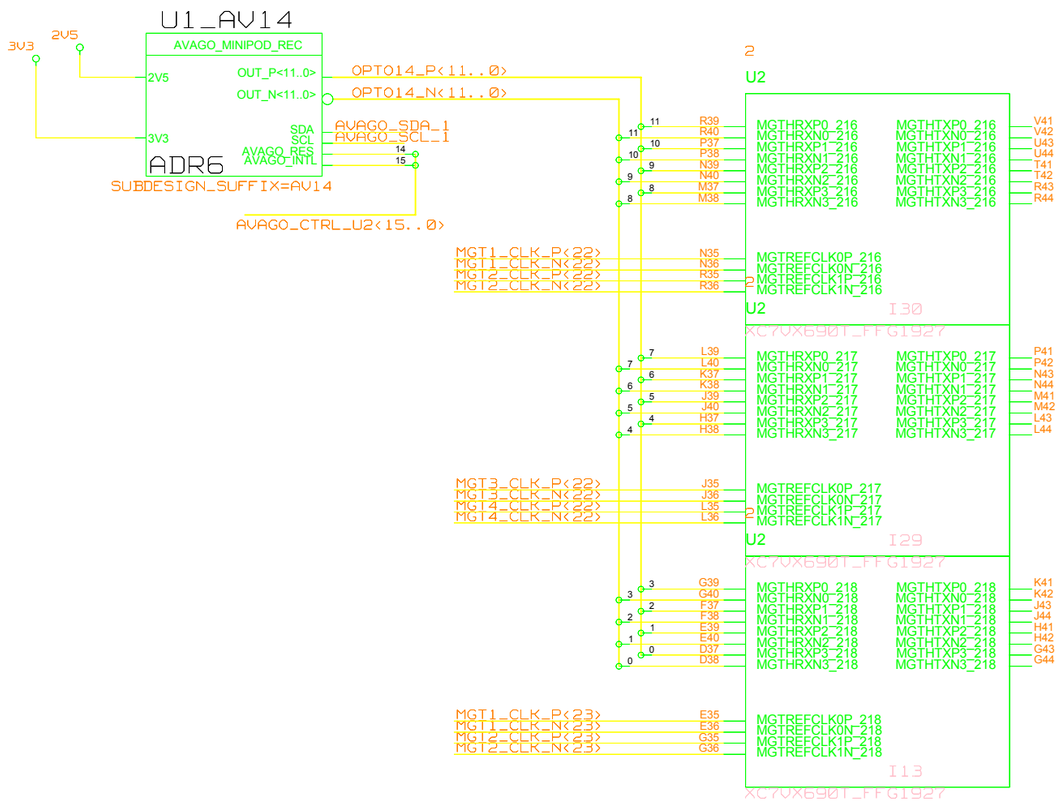

UNIVERSITY OF MAINZ

BLOCK: PROCESSOR
OPTO_IN

DRAWING TITLE: OPTO INPUT B

SIZE: C | REV. | DRAWING NO.

SCALE | SHEET OF

REVISIONS				
ZONE	LTR	DESCRIPTION	DATE	APPR.

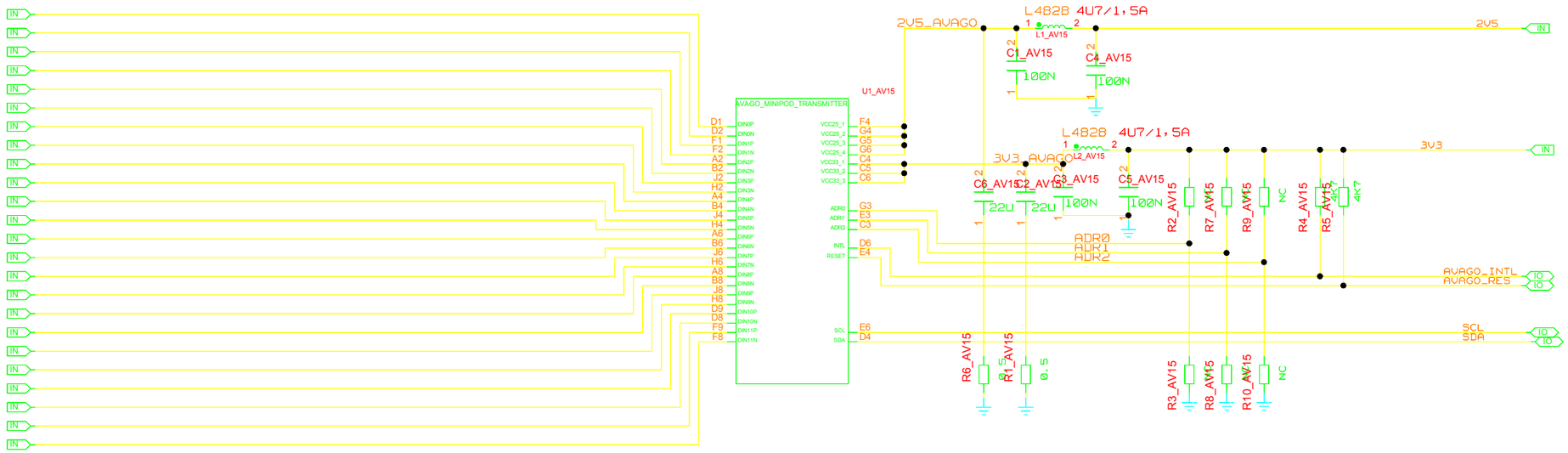

UNIVERSITY OF MAINZ

DRAWING TITLE

AVAGO TRANSMITTER

SIZE	REV.	DRAWING NO.
C		

SCALE | SHEET OF

REVISIONS				
ZONE	LTR	DESCRIPTION	DATE	APPR.

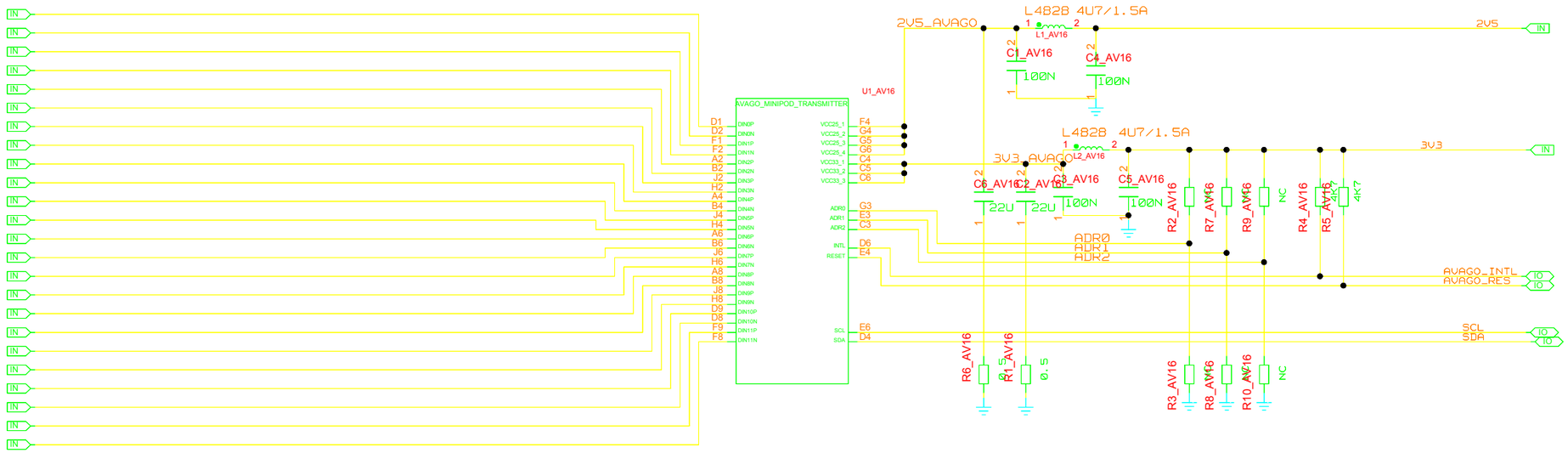

UNIVERSITY OF MAINZ

DRAWING TITLE

AVAGO TRANSMITTER

SIZE	REV.	DRAWING NO.
C		

SCALE | SHEET OF

REVISIONS				
ZONE	LTR	DESCRIPTION	DATE	APPR.

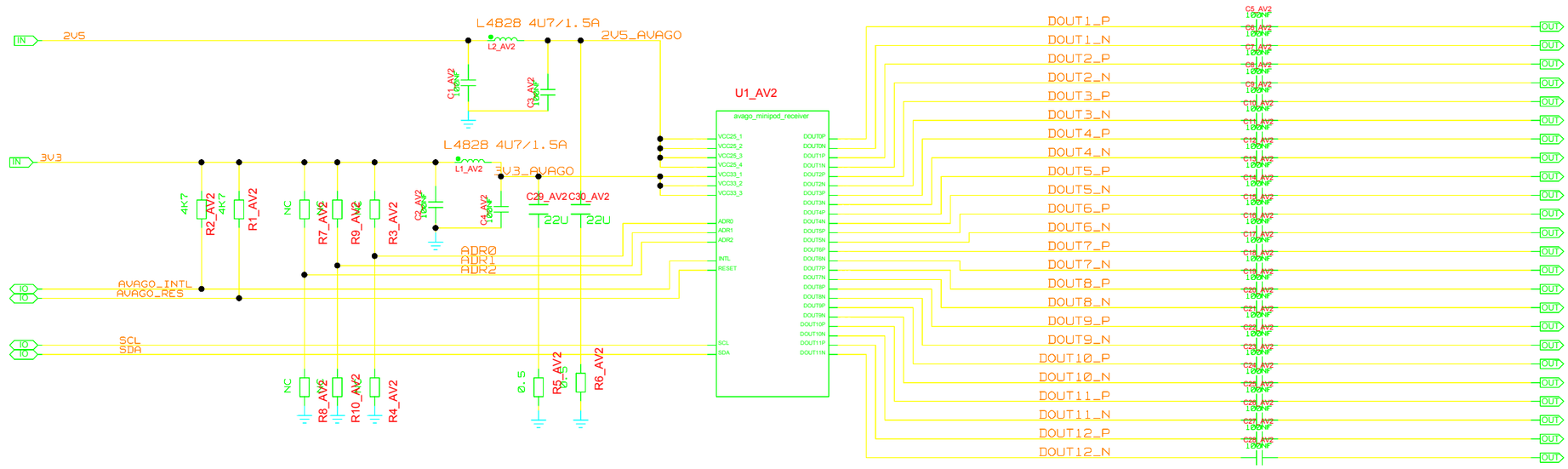

UNIVERSITY OF MAINZ	DRAWING TITLE: AVAGO RECEIVER		
	SIZE: C	REV.	DRAWING NO.
	SCALE		SHEET OF

REVISIONS				
ZONE	LTR	DESCRIPTION	DATE	APPR.

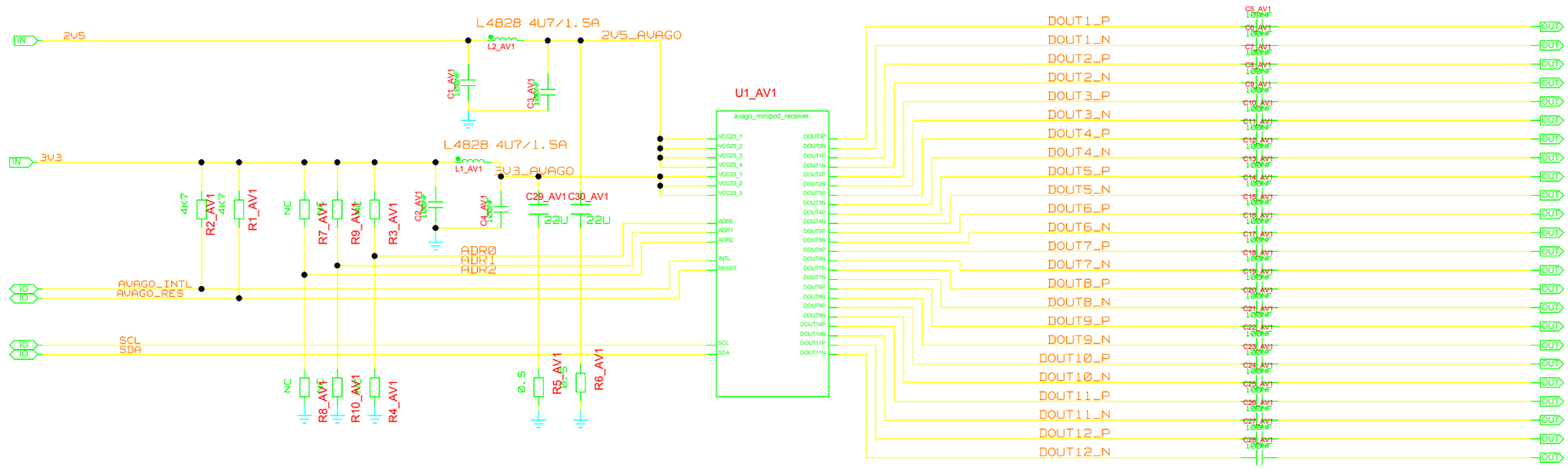

UNIVERSITY OF MAINZ

DRAWING TITLE

AVAGO RECEIVER

SIZE	REV.	DRAWING NO.
C		

SCALE | SHEET OF

REVISIONS				
ZONE	LTR	DESCRIPTION	DATE	APPR.

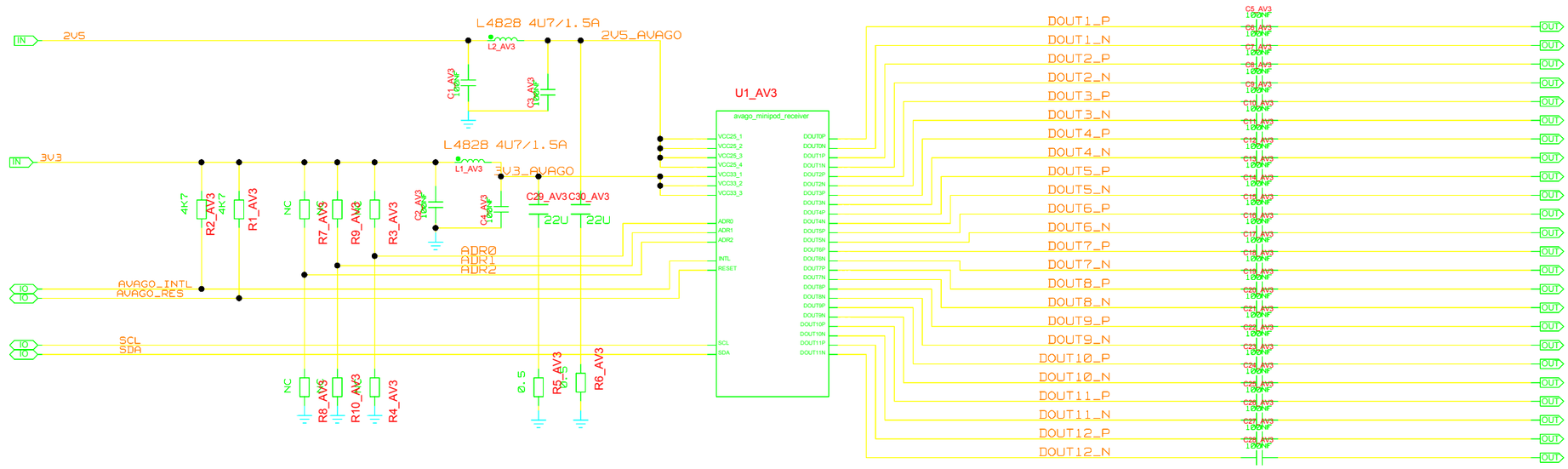

UNIVERSITY OF MAINZ	DRAWING TITLE: AVAGO RECEIVER		
	SIZE: C	REV.	DRAWING NO.
	SCALE		SHEET OF

REVISIONS				
ZONE	LTR	DESCRIPTION	DATE	APPR.

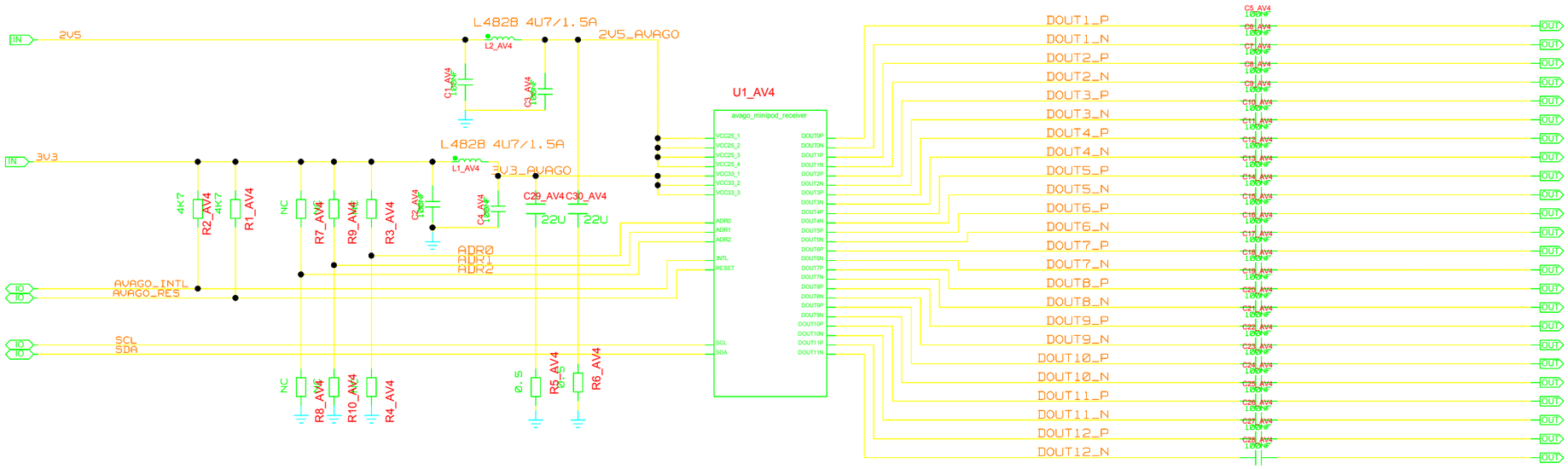

UNIVERSITY OF MAINZ

DRAWING TITLE

AVAGO RECEIVER

SIZE	REV.	DRAWING NO.
C		

SCALE | SHEET OF

REVISIONS				
ZONE	LTR	DESCRIPTION	DATE	APPR.

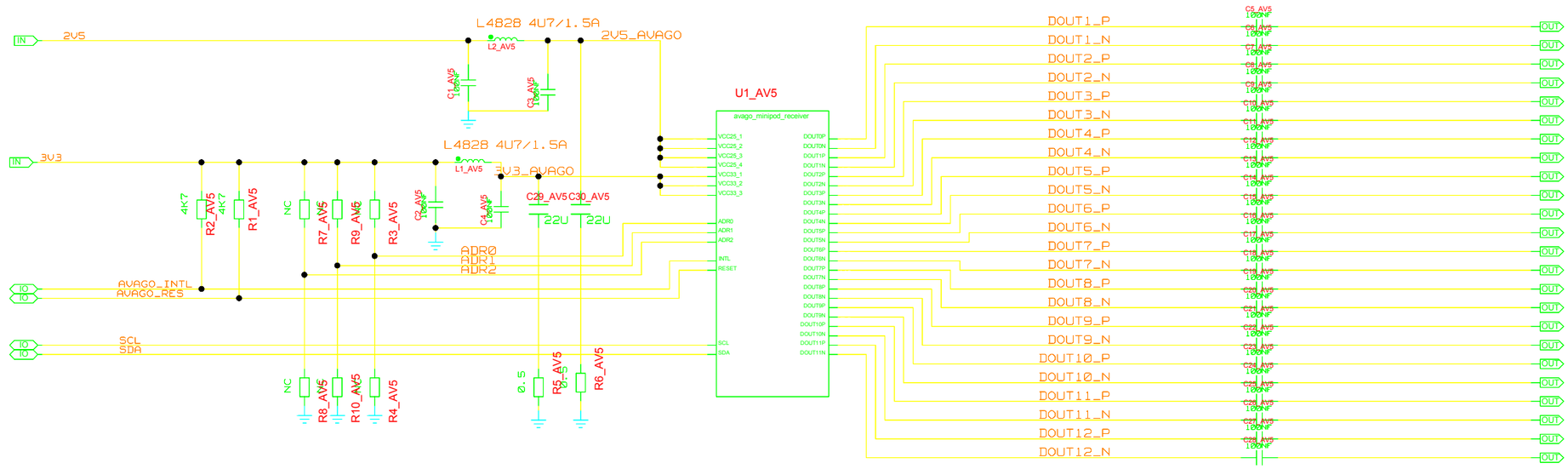

UNIVERSITY OF MAINZ	DRAWING TITLE: AVAGO RECEIVER		
	SIZE: C	REV.	DRAWING NO.
	SCALE		SHEET OF

REVISIONS				
ZONE	LTR	DESCRIPTION	DATE	APPR.

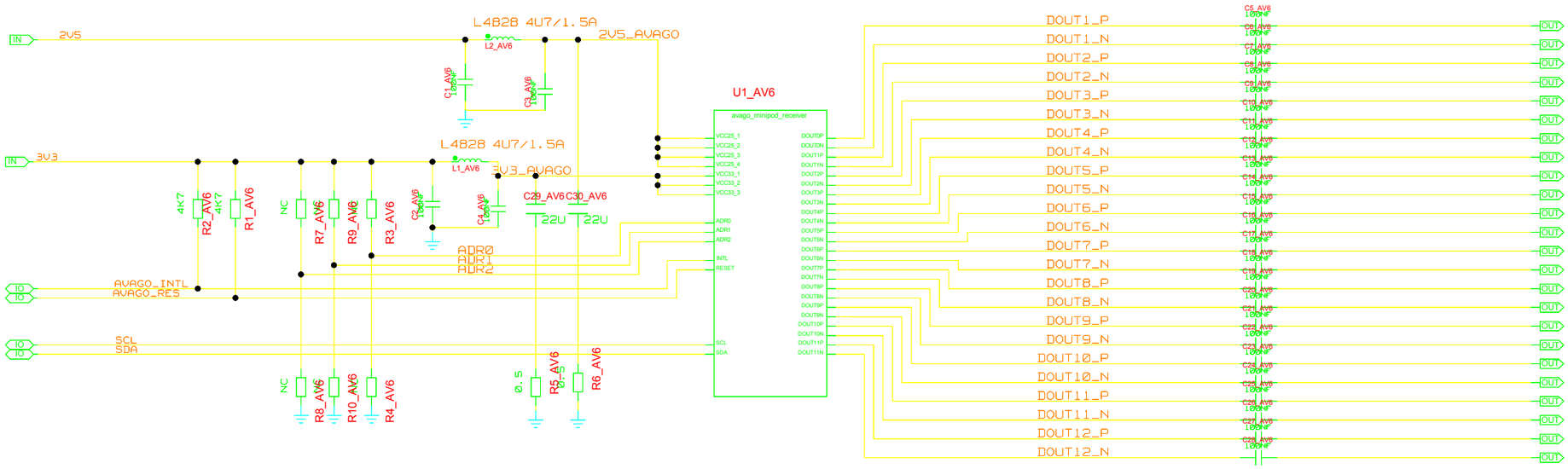

UNIVERSITY OF MAINZ	DRAWING TITLE: AVAGO RECEIVER		
	SIZE: C	REV.	DRAWING NO.
	SCALE		SHEET OF

REVISIONS				
ZONE	LTR	DESCRIPTION	DATE	APPR.

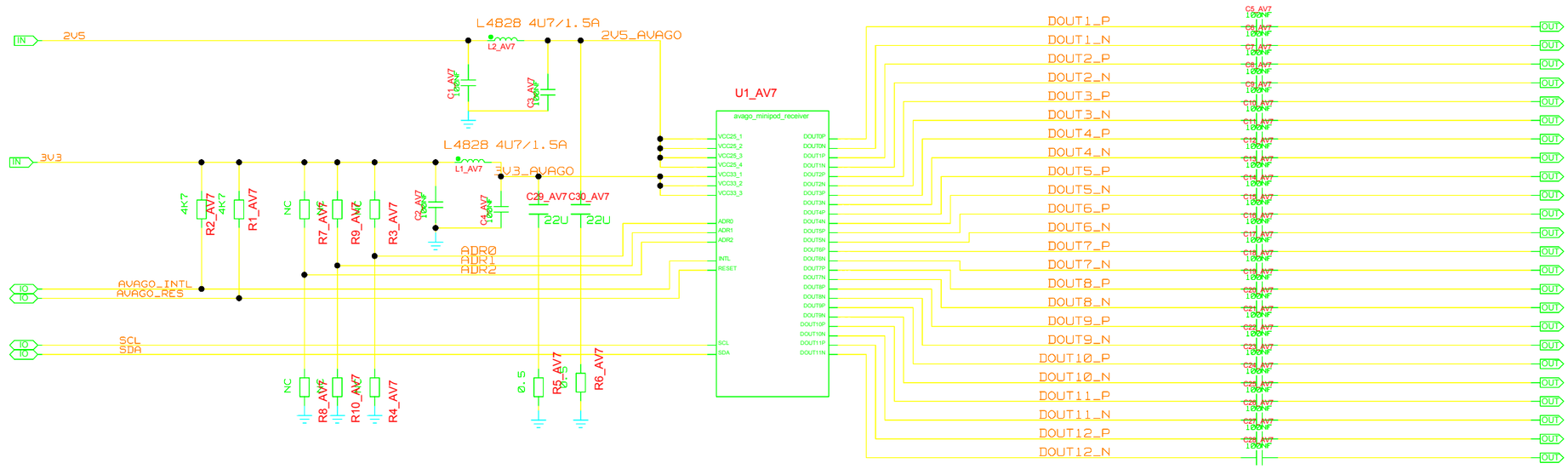

UNIVERSITY OF MAINZ	DRAWING TITLE: AVAGO RECEIVER		
	SIZE: C	REV.	DRAWING NO.
	SCALE		SHEET OF

REVISIONS				
ZONE	LTR	DESCRIPTION	DATE	APPR.

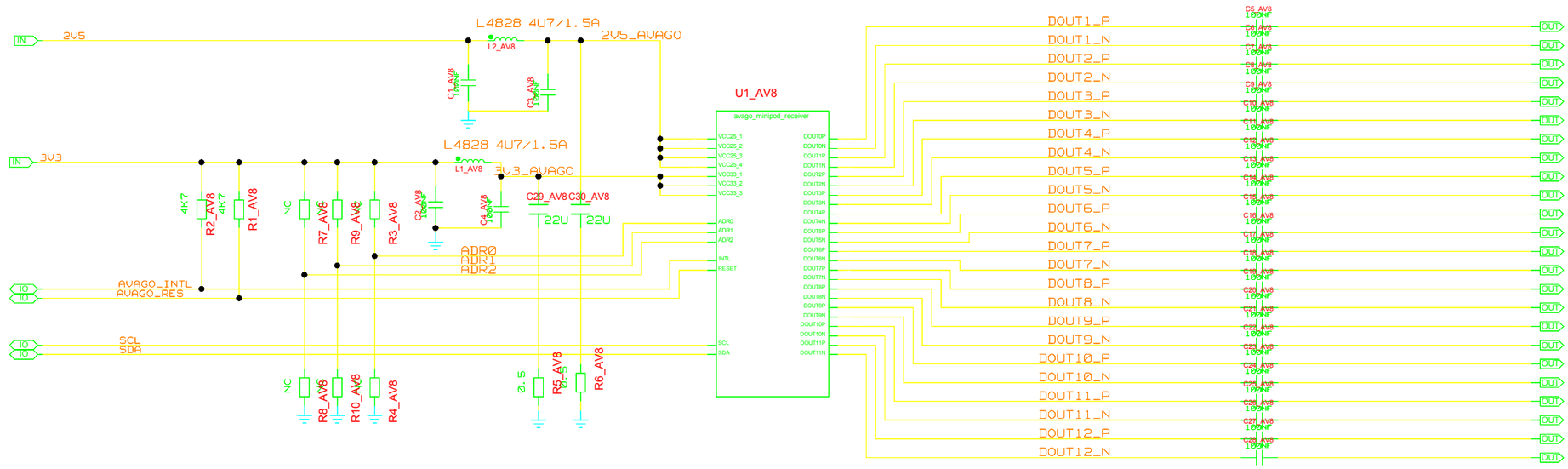

UNIVERSITY OF MAINZ	DRAWING TITLE: AVAGO RECEIVER		
	SIZE: C	REV.	DRAWING NO.
	SCALE		SHEET OF

REVISIONS				
ZONE	LTR	DESCRIPTION	DATE	APPR.

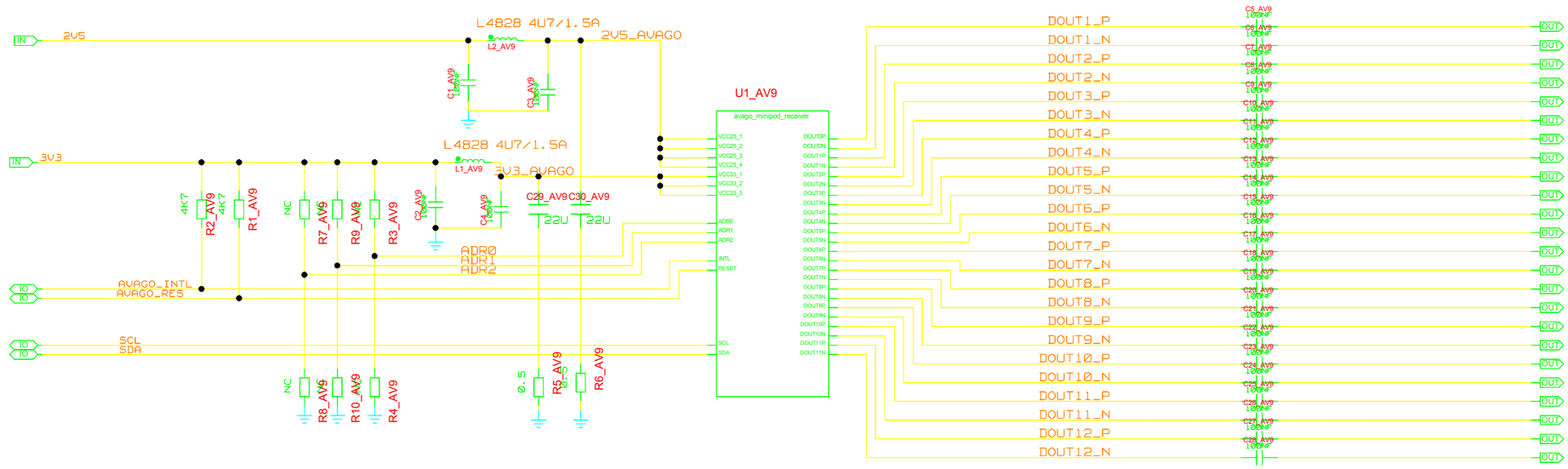

UNIVERSITY OF MAINZ

DRAWING TITLE

AVAGO RECEIVER

SIZE	REV.	DRAWING NO.
C		

SCALE | SHEET OF

REVISIONS				
ZONE	LTR	DESCRIPTION	DATE	APPR.

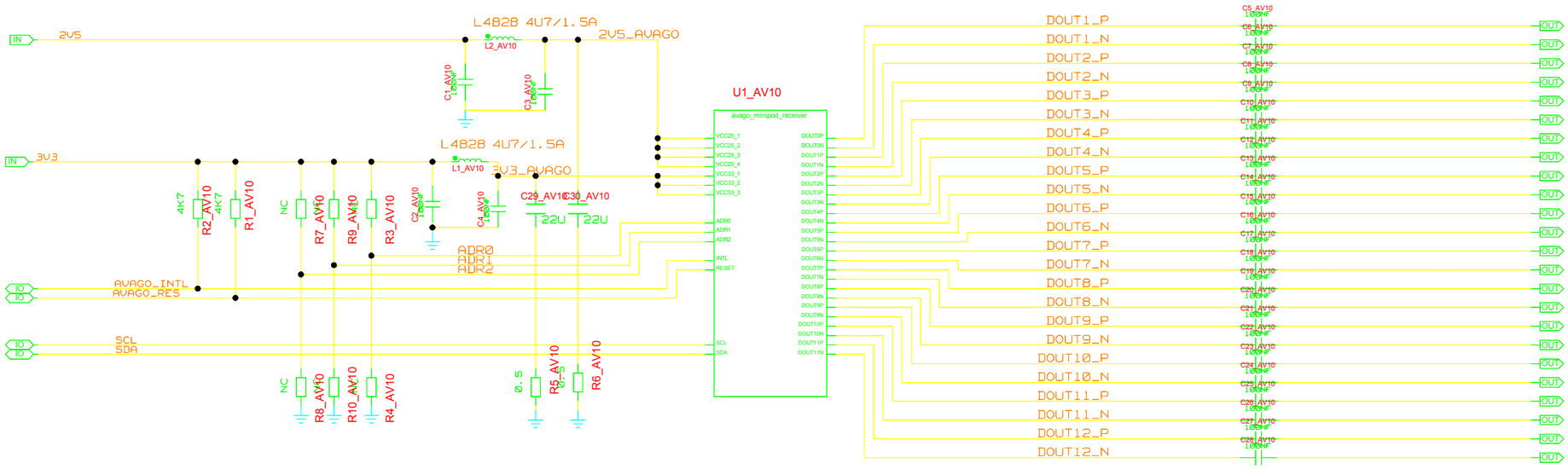

UNIVERSITY OF MAINZ	DRAWING TITLE: AVAGO RECEIVER		
	SIZE: C	REV.	DRAWING NO.
	SCALE		SHEET OF

REVISIONS				
ZONE	LTR	DESCRIPTION	DATE	APPR.

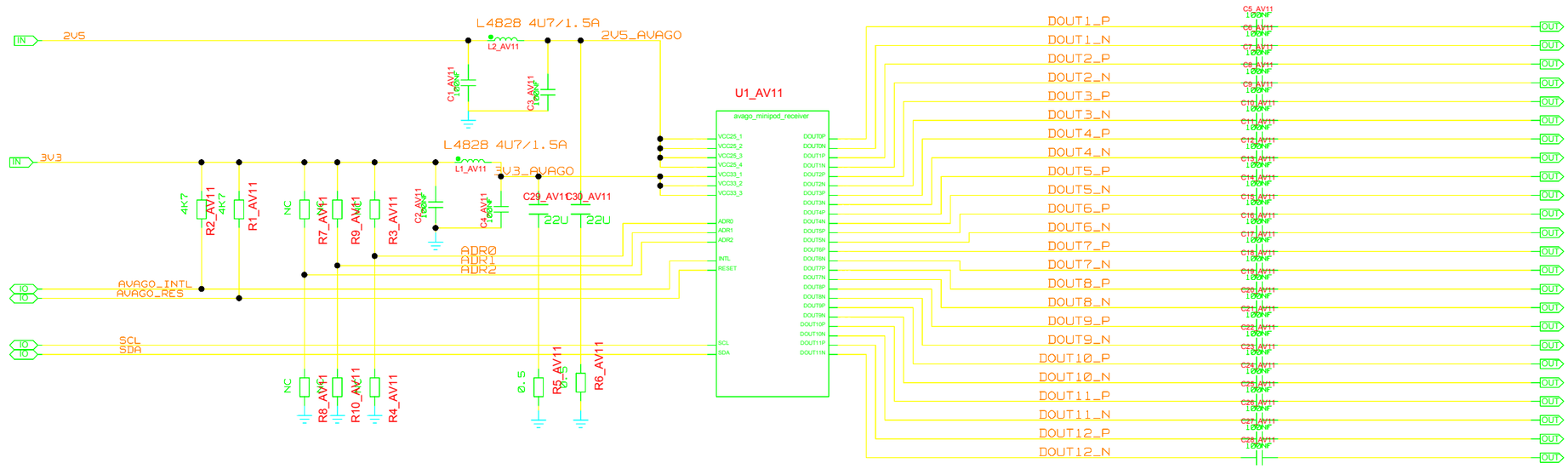

UNIVERSITY OF MAINZ

DRAWING TITLE

AVAGO RECEIVER

SIZE	REV.	DRAWING NO.
C		

SCALE | SHEET OF

REVISIONS				
ZONE	LTR	DESCRIPTION	DATE	APPR.

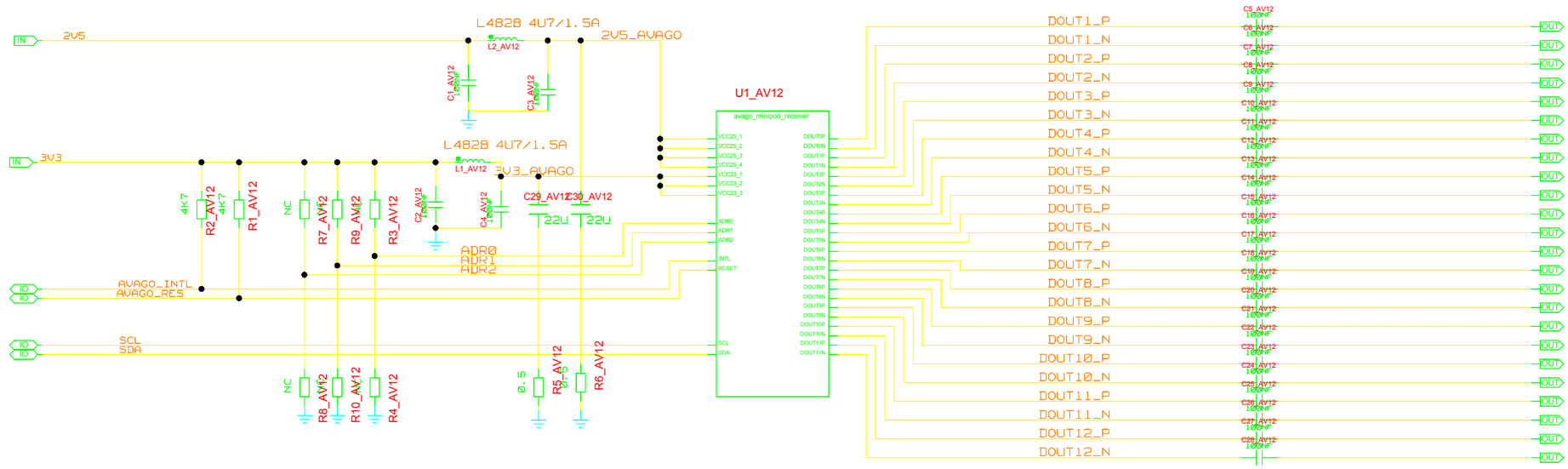

UNIVERSITY OF MAINZ	DRAWING TITLE: AVAGO RECEIVER		
	SIZE: C	REV.	DRAWING NO.
	SCALE		SHEET OF

REVISIONS				
ZONE	LTR	DESCRIPTION	DATE	APPR.

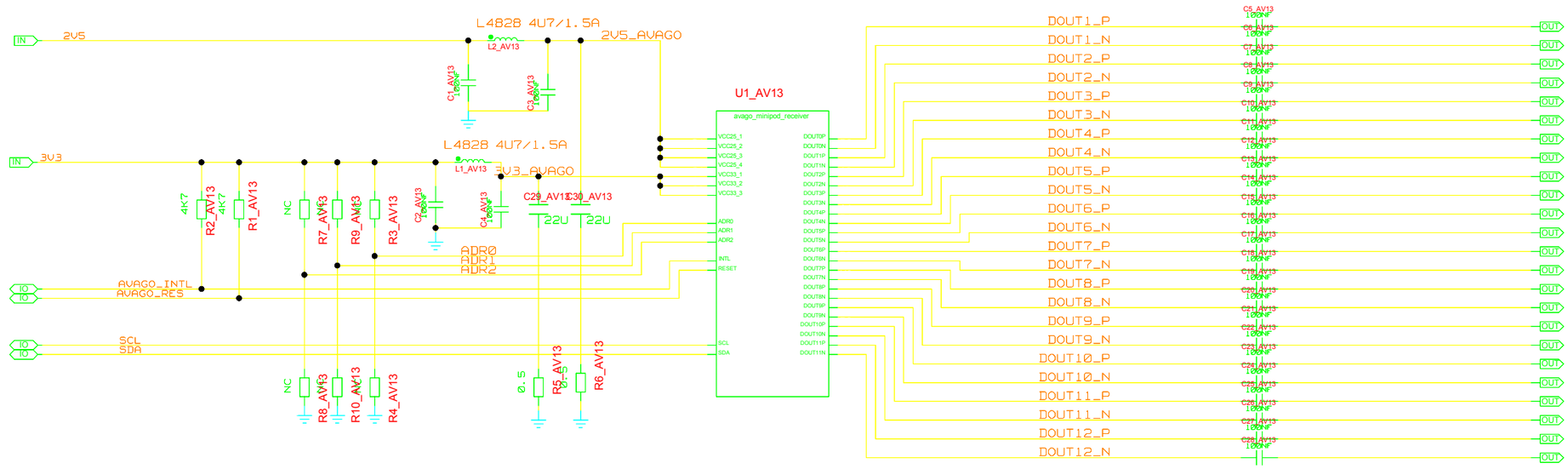

UNIVERSITY OF MAINZ	DRAWING TITLE: AVAGO RECEIVER		
	SIZE: C	REV.	DRAWING NO.
	SCALE		SHEET OF

REVISIONS				
ZONE	LTR	DESCRIPTION	DATE	APPR.

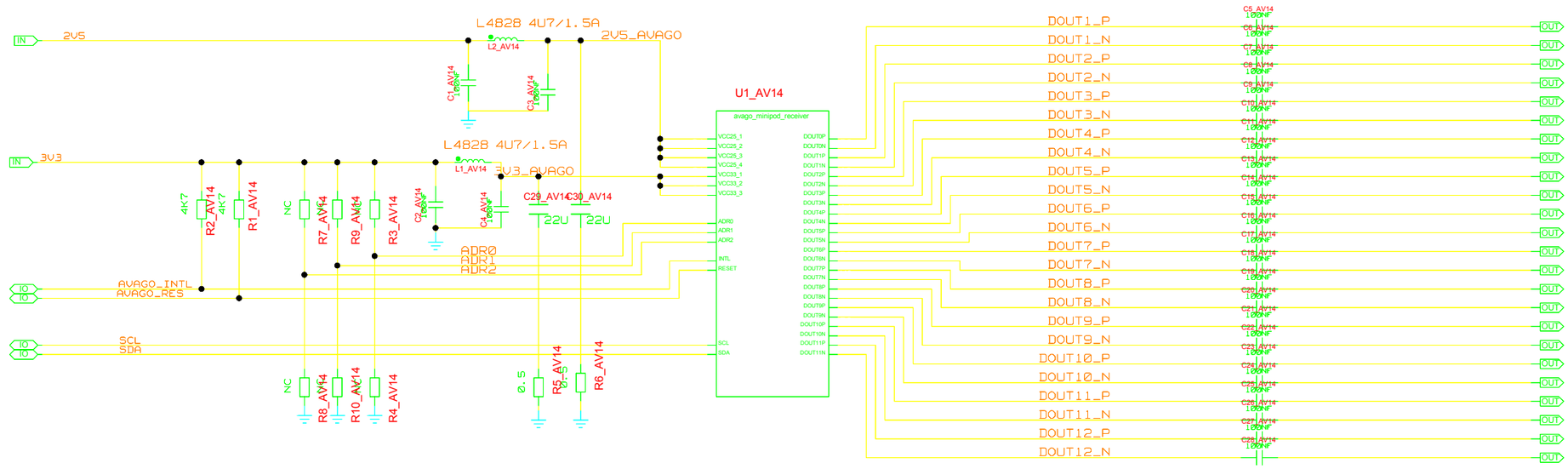

UNIVERSITY OF MAINZ	DRAWING TITLE: AVAGO RECEIVER		
	SIZE: C	REV.	DRAWING NO.
	SCALE		SHEET OF

REVISIONS				
ZONE	LTR	DESCRIPTION	DATE	APPR.

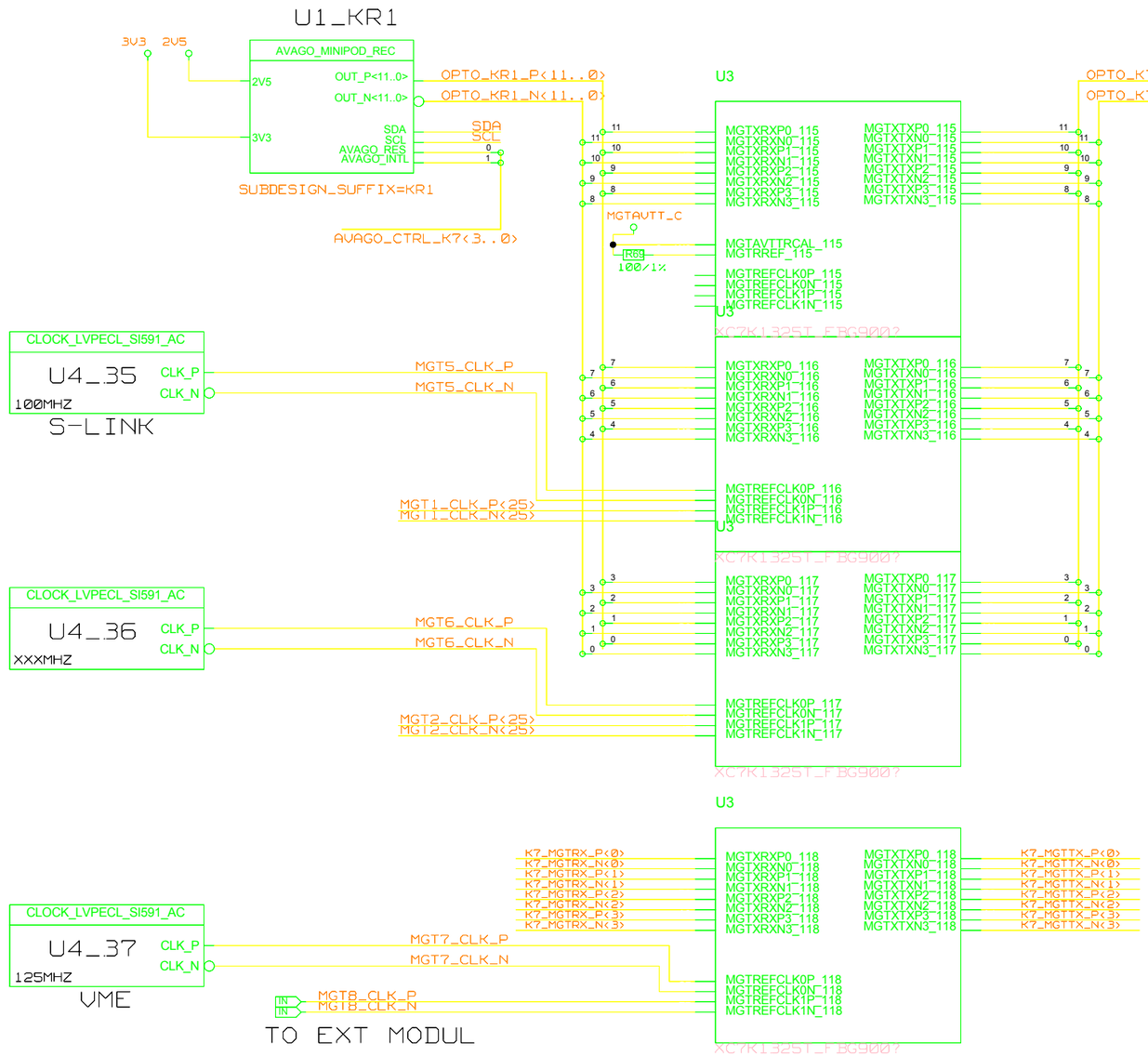

SDA
SCL
AVAGO_CTRL_K7<3..0>
K7_MGTRX_P<3..0>
K7_MGTRX_N<3..0>
K7_MGTTX_P<3..0>
K7_MGTTX_N<3..0>
MGT1_CLK_P<25..1>
MGT1_CLK_N<25..1>
MGT2_CLK_P<25..1>
MGT2_CLK_N<25..1>

UNIVERSITY OF MAINZ

BLOCK: PROCESSOR KINTEX7_OPTO

DRAWING TITLE: DAQ AND ROI VME

SIZE: C | REV. | DRAWING NO.

SCALE | SHEET OF

REVISIONS				
ZONE	LTR	DESCRIPTION	DATE	APPR.

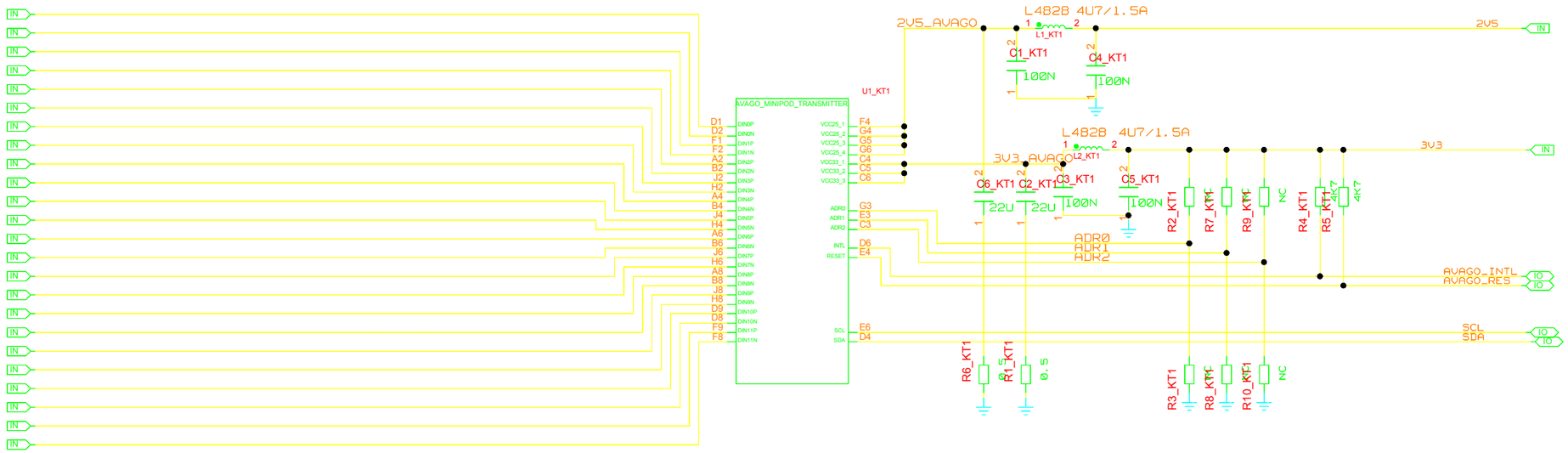

UNIVERSITY OF MAINZ

DRAWING TITLE

AVAGO TRANSMITTER

SIZE	REV.	DRAWING NO.
C		

SCALE | SHEET OF

REVISIONS				
ZONE	LTR	DESCRIPTION	DATE	APPR.

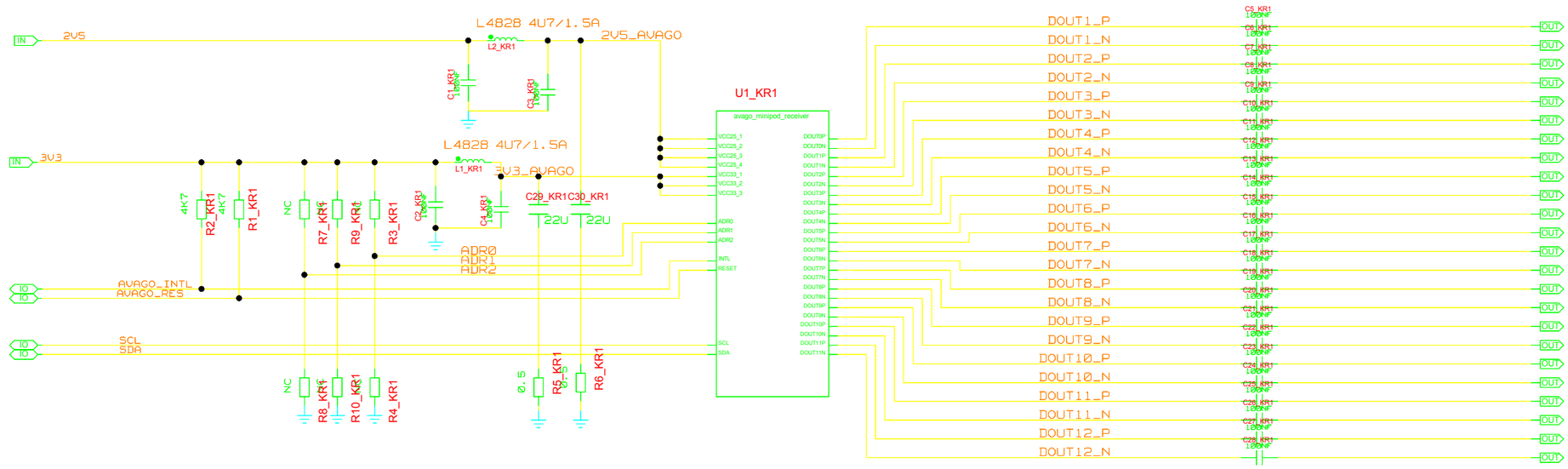

UNIVERSITY OF MAINZ	DRAWING TITLE: AVAGO RECEIVER		
	SIZE: C	REV.	DRAWING NO.
	SCALE		SHEET OF

REVISIONS				
ZONE	LTR	DESCRIPTION	DATE	APPR.

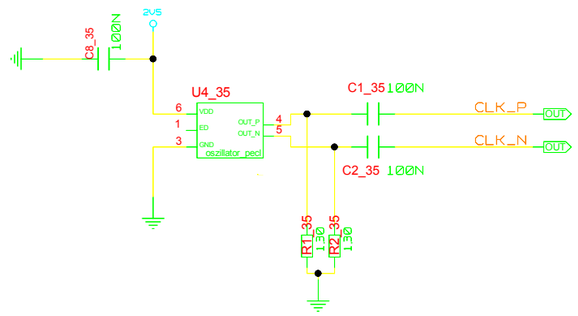

UNIVERSITY OF MAINZ

BLOCK: CLOCK

DRAWING TITLE

CLOCK_LVPECL_AC

SIZE C

REV.

DRAWING NO.

SCALE

SHEET OF

REVISIONS				
ZONE	LTR	DESCRIPTION	DATE	APPR.

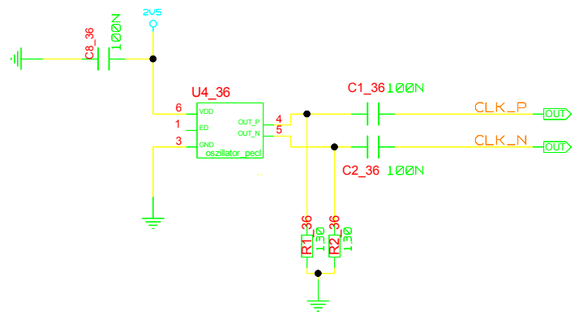

UNIVERSITY OF MAINZ

BLOCK: CLOCK

DRAWING TITLE

CLOCK_LVPECL_AC

SIZE	REV.	DRAWING NO.
C		

SCALE

SHEET OF

REVISIONS				
ZONE	LTR	DESCRIPTION	DATE	APPR.

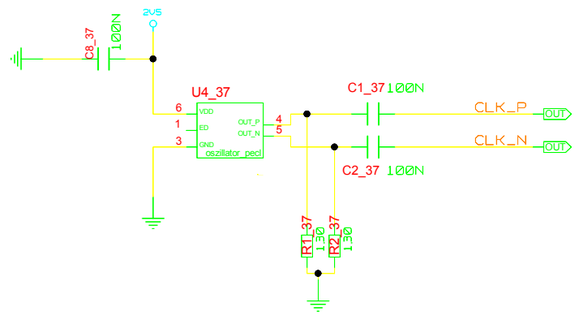

UNIVERSITY OF MAINZ

BLOCK: CLOCK

DRAWING TITLE

CLOCK_LVPECL_AC

SIZE	REV.	DRAWING NO.
C		

SCALE

SHEET OF

REVISIONS				
ZONE	LTR	DESCRIPTION	DATE	APPR.

BANK15_P<22..0>
BANK15_N<22..0>

VIRTEX7_CTRL<19..0>

U1 I286 — XC7VX690T_FFG1927

Pin	Signal	Pin	Signal
AR24	IO_0_VRN_15		
BD25	IO_L1P_T0_AD0P_15		
BD26	IO_L1N_T0_AD0N_15		
BB23	IO_L2P_T0_AD8P_15		
BC23	IO_L2N_T0_AD8N_15		
BB25	IO_L3P_T0_DQS_AD1P_15		
BC25	IO_L3N_T0_DQS_AD1N_15		
BC24	IO_L4P_T0_15		
BD24	IO_L4N_T0_15		
BA26	IO_L5P_T0_AD9P_15		
BB26	IO_L5N_T0_AD9N_15		
BA24	IO_L6P_T0_15		
BA25	IO_L6N_T0_VREF_15		
AW26	IO_L7P_T1_AD2P_15		
AY26	IO_L7N_T1_AD2N_15		
AY23	IO_L8P_T1_AD10P_15		
BA23	IO_L8N_T1_AD10N_15		
AV25	IO_L9P_T1_DQS_AD3P_15		
AW25	IO_L9N_T1_DQS_AD3N_15		
AW24	IO_L10P_T1_AD11P_15		
AY24	IO_L10N_T1_AD11N_15		
AY23	IO_L11P_T1_SRCC_15		
AV24	IO_L11N_T1_SRCC_15		
AU25	IO_L12P_T1_MRCC_15		
AU26	IO_L12N_T1_MRCC_15		
AT23	IO_L13P_T2_MRCC_15		
AU23	IO_L13N_T2_MRCC_15		
AT24	IO_L14P_T2_SRCC_15		
AT25	IO_L14N_T2_SRCC_15		
AN23	IO_L15P_T2_DQS_15		
AN24	IO_L15N_T2_DQS_ADV_B_15		
AT26	IO_L16P_T2_A28_15		
AU27	IO_L16N_T2_A27_15		
AP24	IO_L17P_T2_A26_15		
AP25	IO_L17N_T2_A25_15		
AN25	IO_L18P_T2_A24_15		
AP26	IO_L18N_T2_A23_15		
AL23	IO_L19P_T3_A22_15		
AM23	IO_L19N_T3_A21_VREF_15		
AM25	IO_L20P_T3_A20_15		
AM26	IO_L20N_T3_A19_15		
AK23	IO_L21P_T3_DQS_15		
AK24	IO_L21N_T3_DQS_A18_15		
AK26	IO_L22P_T3_A17_15		
AL26	IO_L22N_T3_A16_15		
AL24	IO_L23P_T3_FOE_B_15		
AL25	IO_L23N_T3_FWE_B_15		
AJ25	IO_L24P_T3_RS1_15		
AJ26	IO_L24N_T3_RS0_15		
AR26	IO_25_VRP_15		
		VCCO_15_1	AJ23
		VCCO_15_2	AM24
		VCCO_15_3	AR25
		VCCO_15_4	AV26
		VCCO_15_5	AW23
		VCCO_15_6	BB24

1VB_A

U2 I225 — XC7VX690T_FFG1927

Pin	Signal	Pin	Signal
M26	IO_0_VRN_17		
C25	IO_L1P_T0_17		
B25	IO_L1N_T0_17		
B23	IO_L2P_T0_17		
A23	IO_L2N_T0_17		
A24	IO_L3P_T0_DQS_17		
A25	IO_L3N_T0_DQS_17		
C23	IO_L4P_T0_17		
C24	IO_L4N_T0_17		
D24	IO_L5P_T0_17		
D25	IO_L5N_T0_17		
E23	IO_L6P_T0_17		
E24	IO_L6N_T0_VREF_17		
G23	IO_L7P_T1_17		
F23	IO_L7N_T1_17		
AU20	IO_L8P_T1_17		
AV19	IO_L8N_T1_17		
C30	IO_L9P_T1_DQS_17		
B30	IO_L9N_T1_DQS_17		
AW19	IO_L10P_T1_17		
AY19	IO_L10N_T1_17		
AV20	IO_L11P_T1_SRCC_17		
AW20	IO_L11N_T1_SRCC_17		
AY18	IO_L12P_T1_MRCC_17		
AY17	IO_L12N_T1_MRCC_17		
BC19	IO_L13P_T2_MRCC_17		
BC18	IO_L13N_T2_MRCC_17		
F24	IO_L14P_T2_SRCC_17		
F25	IO_L14N_T2_SRCC_17		
G25	IO_L15P_T2_DQS_17		
G26	IO_L15N_T2_DQS_17		
BA16	IO_L16P_T2_17		
BA15	IO_L16N_T2_17		
BC20	IO_L17P_T2_17		
BD19	IO_L17N_T2_17		
BB17	IO_L18P_T2_17		
BC17	IO_L18N_T2_17		
J24	IO_L19P_T3_17		
H25	IO_L19N_T3_VREF_17		
H23	IO_L20P_T3_17		
H24	IO_L20N_T3_17		
L24	IO_L21P_T3_DQS_17		
L25	IO_L21N_T3_DQS_17		
J25	IO_L22P_T3_17		
J26	IO_L22N_T3_17		
L26	IO_L23P_T3_17		
K26	IO_L23N_T3_17		
R23	IO_L24P_T3_17		
R24	IO_L24N_T3_17		
P24	IO_25_VRP_17		
		VCCO_17_1	B24
		VCCO_17_2	E25
		VCCO_17_3	H26
		VCCO_17_4	J23
		VCCO_17_5	M24
		VCCO_17_6	R25

1VB_B

BANK16_P<23..0>
BANK16_N<23..0>

U1 I204 — XC7VX690T_FFG1927

Pin	Signal	Pin	Signal
AU35	IO_0_VRN_16		
AK33	IO_L1P_T0_16		
AL33	IO_L1N_T0_16		
AJ30	IO_L2P_T0_16		
AJ31	IO_L2N_T0_16		
AK31	IO_L3P_T0_DQS_16		
AL31	IO_L3N_T0_DQS_16		
AJ32	IO_L4P_T0_16		
AK32	IO_L4N_T0_16		
AL30	IO_L5P_T0_16		
AM31	IO_L5N_T0_16		
AM32	IO_L6P_T0_16		
AM33	IO_L6N_T0_VREF_16		
AN32	IO_L7P_T1_16		
AN33	IO_L7N_T1_16		
AR33	IO_L8P_T1_16		
AT33	IO_L8N_T1_16		
AP31	IO_L9P_T1_DQS_16		
AP32	IO_L9N_T1_DQS_16		
AR31	IO_L10P_T1_16		
AR32	IO_L10N_T1_16		
AU31	IO_L11P_T1_SRCC_16		
AU32	IO_L11N_T1_SRCC_16		
AU33	IO_L12P_T1_MRCC_16		
AV33	IO_L12N_T1_MRCC_16		
AV32	IO_L13P_T2_MRCC_16		
AW32	IO_L13N_T2_MRCC_16		
AV34	IO_L14P_T2_SRCC_16		
AV35	IO_L14N_T2_SRCC_16		
AW34	IO_L15P_T2_DQS_16		
AW35	IO_L15N_T2_DQS_16		
AY33	IO_L16P_T2_16		
AY34	IO_L16N_T2_16		
BA34	IO_L17P_T2_16		
BA35	IO_L17N_T2_16		
AY32	IO_L18P_T2_16		
BA33	IO_L18N_T2_16		
BB31	IO_L19P_T3_16		
BB32	IO_L19N_T3_VREF_16		
BB35	IO_L20P_T3_16		
BC35	IO_L20N_T3_16		
BC32	IO_L21P_T3_DQS_16		
BC33	IO_L21N_T3_DQS_16		
BB33	IO_L22P_T3_16		
BC34	IO_L22N_T3_16		
BD31	IO_L23P_T3_16		
BD32	IO_L23N_T3_16		
BD34	IO_L24P_T3_16		
BD35	IO_L24N_T3_16		
AT31	IO_25_VRP_16		
		VCCO_16_1	AK30
		VCCO_16_2	AN31
		VCCO_16_3	AT32
		VCCO_16_4	AW33
		VCCO_16_5	BB34
		VCCO_16_6	BC31

1VB_A

U2 I203 — XC7VX690T_FFG1927

Pin	Signal	Pin	Signal
L30	IO_0_VRN_18		
T26	IO_L1P_T0_18		
R26	IO_L1N_T0_18		
T24	IO_L2P_T0_18		
T25	IO_L2N_T0_18		
F30	IO_L3P_T0_DQS_18		
F31	IO_L3N_T0_DQS_18		
U25	IO_L4P_T0_18		
U26	IO_L4N_T0_18		
P31	IO_L5P_T0_18		
N32	IO_L5N_T0_18		
R32	IO_L6P_T0_18		
P32	IO_L6N_T0_VREF_18		
M31	IO_L7P_T1_18		
M32	IO_L7N_T1_18		
L31	IO_L8P_T1_18		
K31	IO_L8N_T1_18		
N33	IO_L9P_T1_DQS_18		
M33	IO_L9N_T1_DQS_18		
K32	IO_L10P_T1_18		
J32	IO_L10N_T1_18		
BC14	IO_L11P_T1_SRCC_18		
BD14	IO_L11N_T1_SRCC_18		
L33	IO_L12P_T1_MRCC_18		
K33	IO_L12N_T1_MRCC_18		
H32	IO_L13P_T2_MRCC_18		
H33	IO_L13N_T2_MRCC_18		
J30	IO_L14P_T2_SRCC_18		
J31	IO_L14N_T2_SRCC_18		
H30	IO_L15P_T2_DQS_18		
G30	IO_L15N_T2_DQS_18		
G31	IO_L16P_T2_18		
G32	IO_L16N_T2_18		
E31	IO_L17P_T2_18		
D32	IO_L17N_T2_18		
G33	IO_L18P_T2_18		
F33	IO_L18N_T2_18		
A30	IO_L19P_T3_18		
A31	IO_L19N_T3_VREF_18		
E32	IO_L20P_T3_18		
E33	IO_L20N_T3_18		
B33	IO_L21P_T3_DQS_18		
A33	IO_L21N_T3_DQS_18		
C32	IO_L22P_T3_18		
C33	IO_L22N_T3_18		
B31	IO_L23P_T3_18		
B32	IO_L23N_T3_18		
D30	IO_L24P_T3_18		
D31	IO_L24N_T3_18		
U31	IO_25_VRP_18		
		VCCO_18_1	C31
		VCCO_18_2	F32
		VCCO_18_3	J33
		VCCO_18_4	K30
		VCCO_18_5	N31
		VCCO_18_6	T32

1VB_B

UNIVERSITY OF MAINZ

BLOCK: PROCESSOR DATA_BUS

DRAWING TITLE: DATABUS

SIZE: C | REV. | DRAWING NO.

SCALE | SHEET OF

REVISIONS				
ZONE	LTR	DESCRIPTION	DATE	APPR.

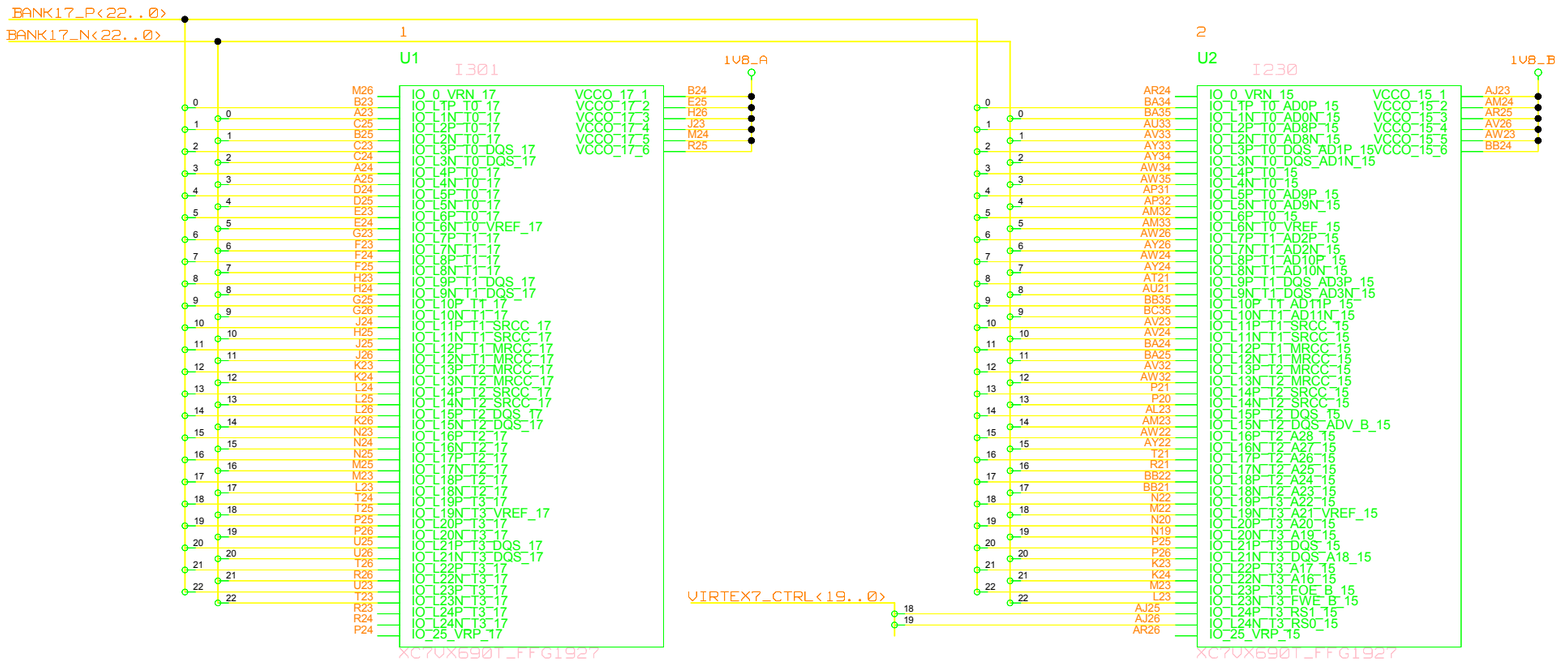

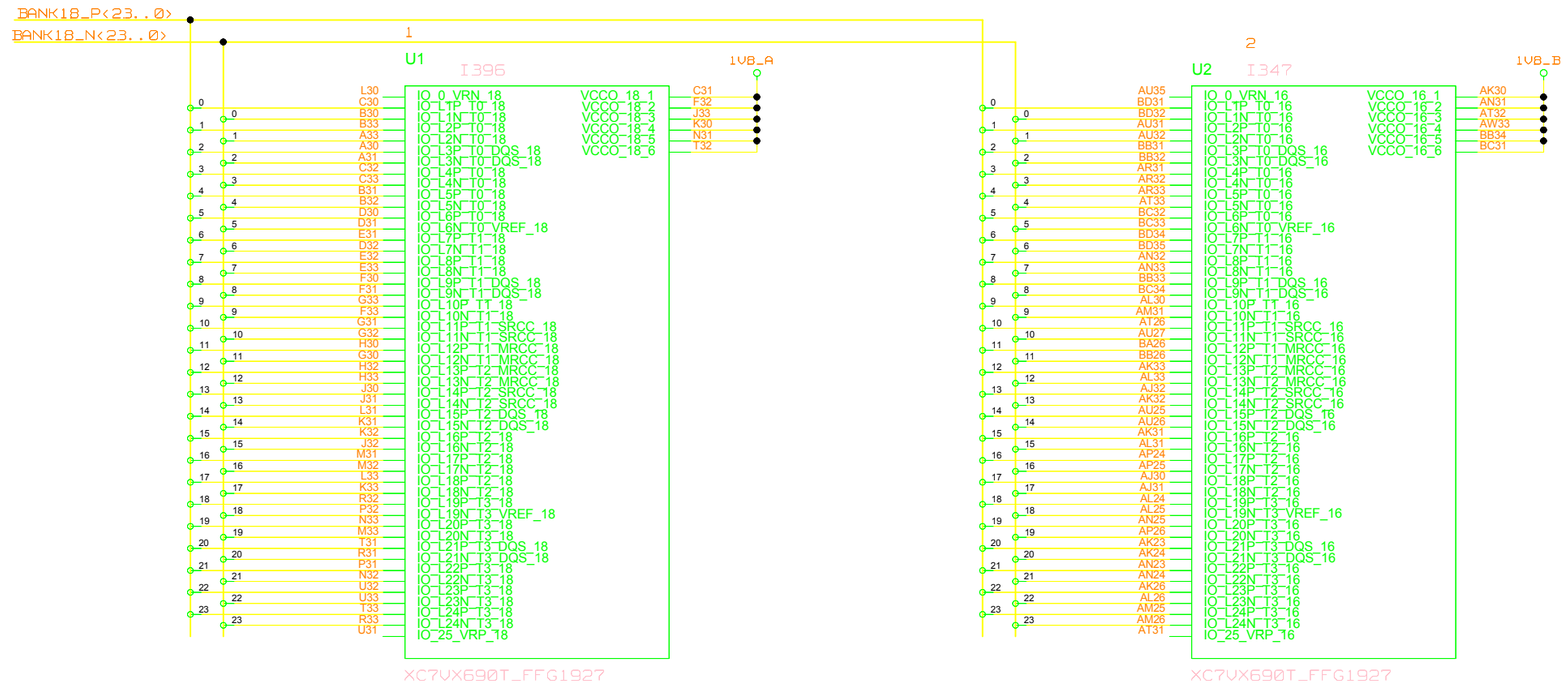

UNIVERSITY OF MAINZ

BLOCK: PROCESSOR
DATA_BUS

DRAWING TITLE: DATABUS

SIZE: C | REV. | DRAWING NO.

SCALE | SHEET OF

REVISIONS				
ZONE	LTR	DESCRIPTION	DATE	APPR.

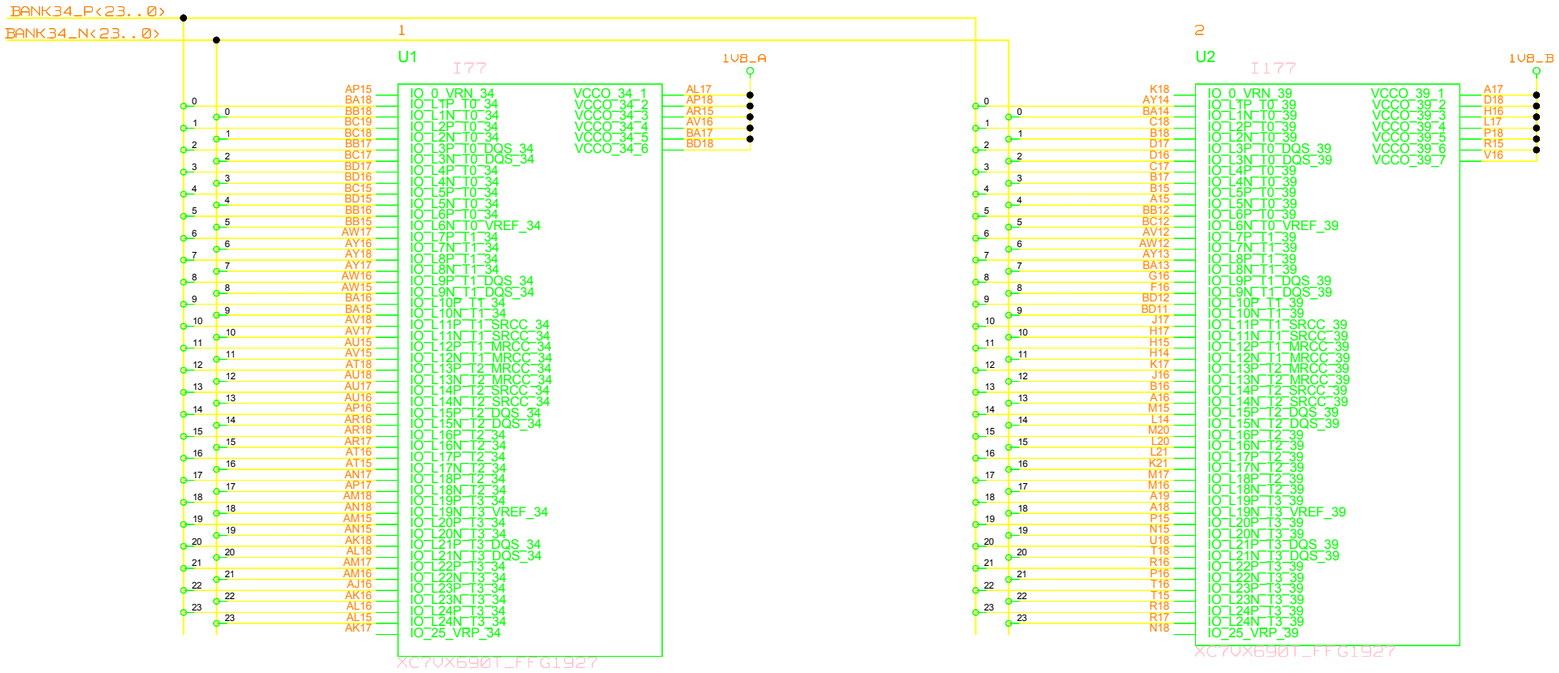

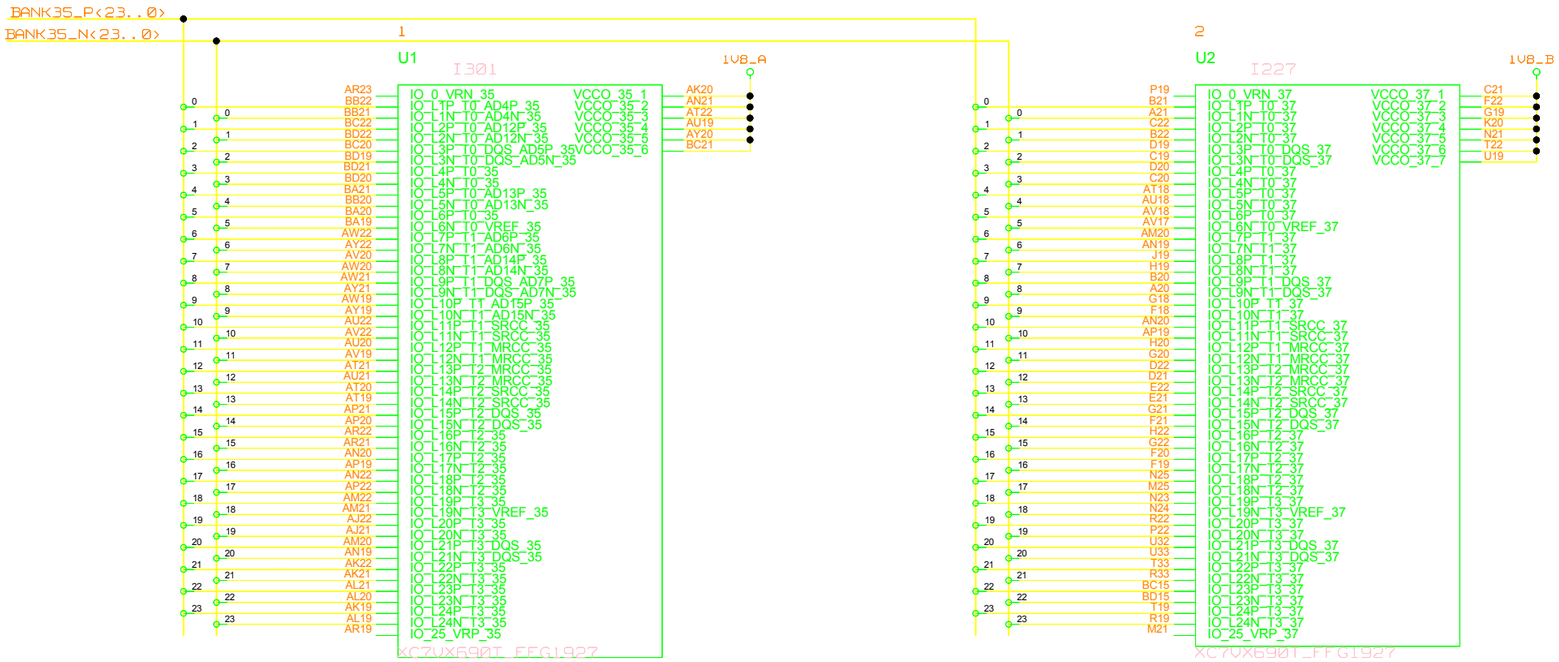

UNIVERSITY OF MAINZ

BLOCK: PROCESSOR
DATA_BUS

DRAWING TITLE: DATABUS

SIZE	REV.	DRAWING NO.
C		

SCALE | SHEET OF

REVISIONS				
ZONE	LTR	DESCRIPTION	DATE	APPR.

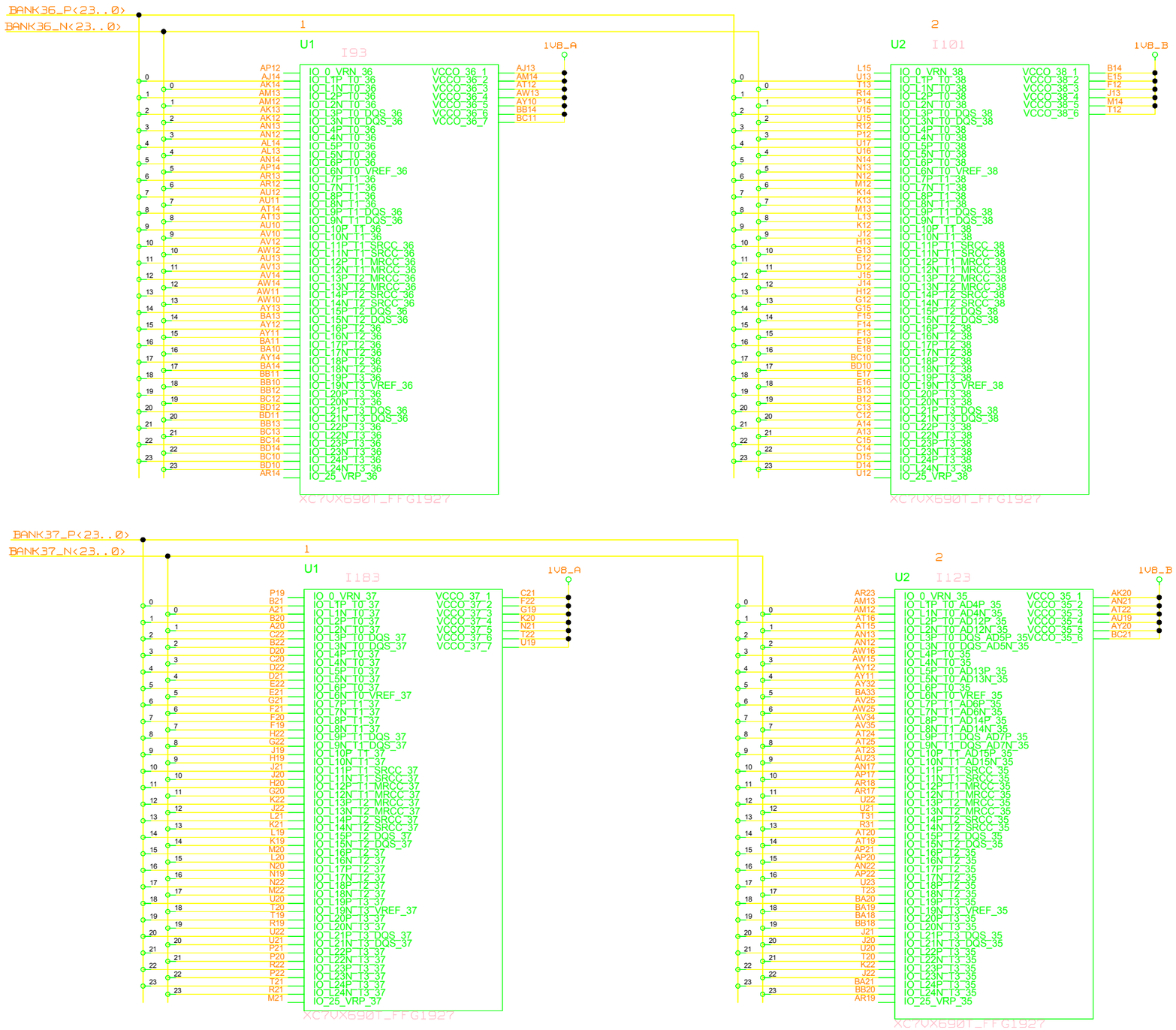

UNIVERSITY OF MAINZ

BLOCK: PROCESSOR DATA_BUS

DRAWING TITLE: DATABUS

SIZE: C | REV. | DRAWING NO.

SCALE | SHEET OF

REVISIONS				
ZONE	LTR	DESCRIPTION	DATE	APPR.

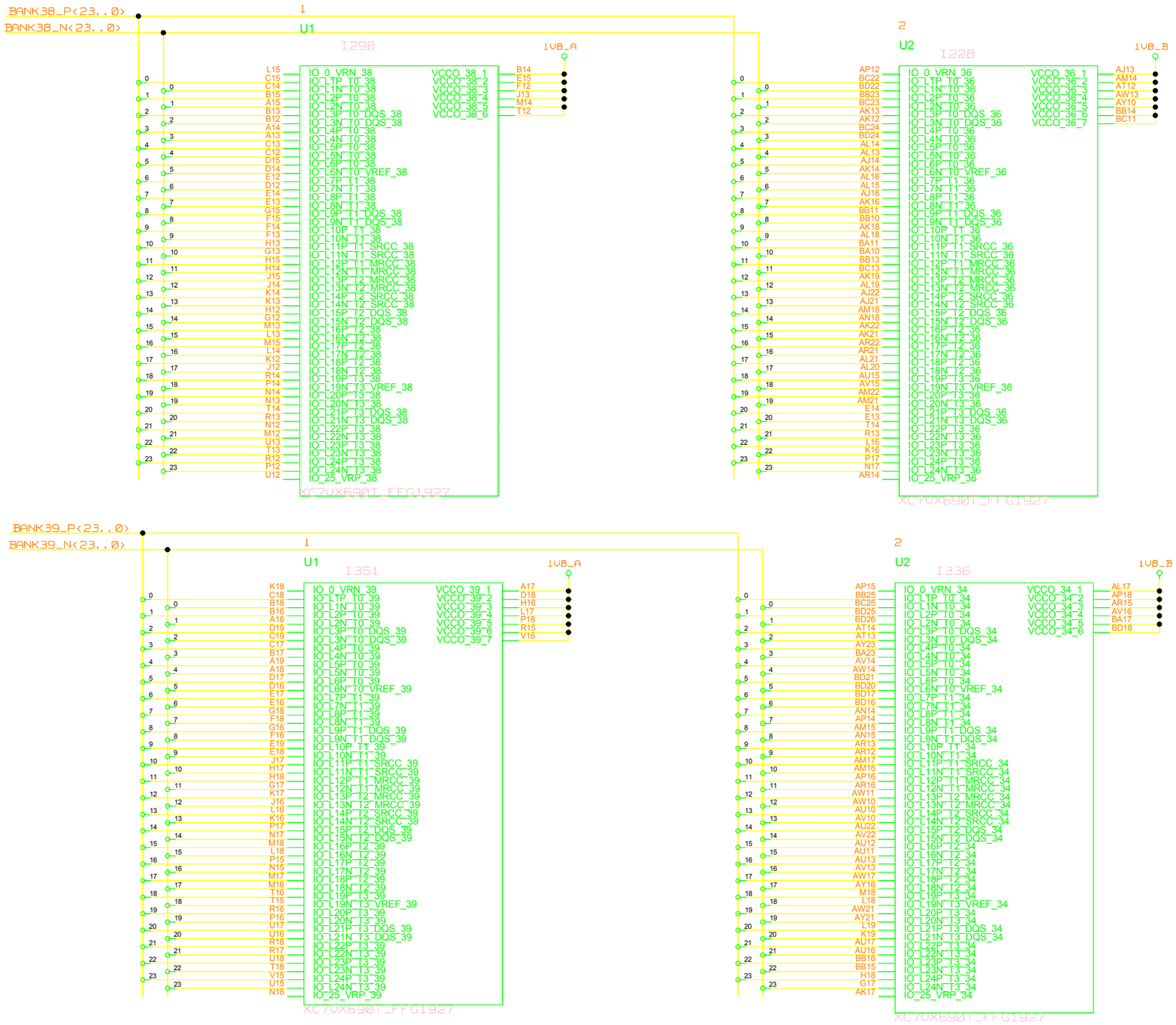

UNIVERSITY OF MAINZ

BLOCK: PROCESSOR DATA_BUS

DRAWING TITLE: DATABUS

SIZE: C | REV. | DRAWING NO.

SCALE | SHEET OF

REVISIONS				
ZONE	LTR	DESCRIPTION	DATE	APPR.

ATCA POWER IN & CTRL

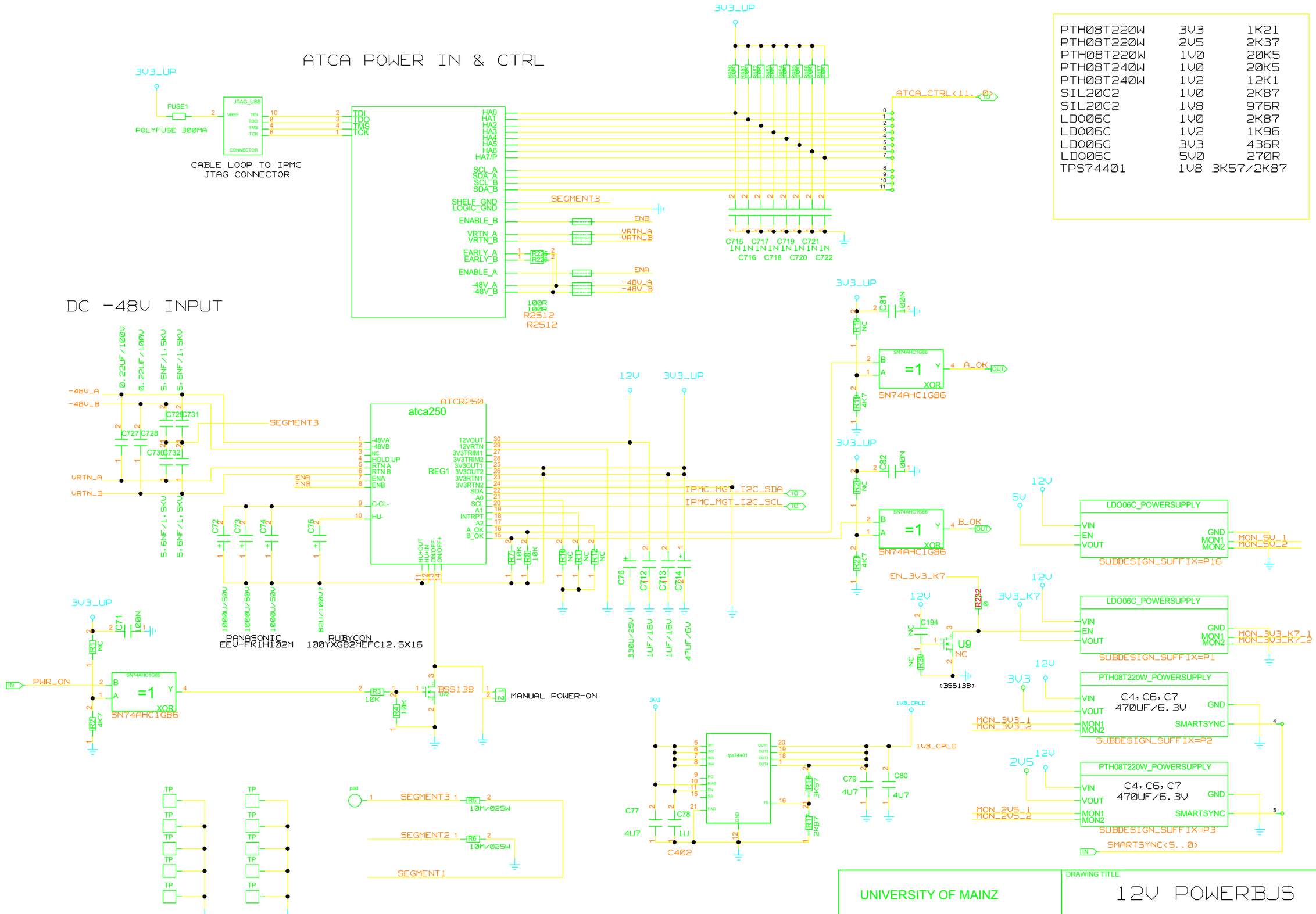

PTH08T220W	3V3	1K21
PTH08T220W	2V5	2K37
PTH08T220W	1V0	20K5
PTH08T240W	1V0	20K5
PTH08T240W	1V2	12K1
SIL20C2	1V0	2K87
SIL20C2	1V8	976R
LDO06C	1V0	2K87
LDO06C	1V2	1K96
LDO06C	3V3	436R
LDO06C	5V0	270R
TPS74401	1V8	3K57/2K87

UNIVERSITY OF MAINZ

BLOCK: POWERSUPPLY

DRAWING TITLE: 12V POWERBUS

SIZE: C

REV.: 02.06.2014

DRAWING NO.

SCALE

SHEET OF

REVISIONS				
ZONE	LTR	DESCRIPTION	DATE	APPR.

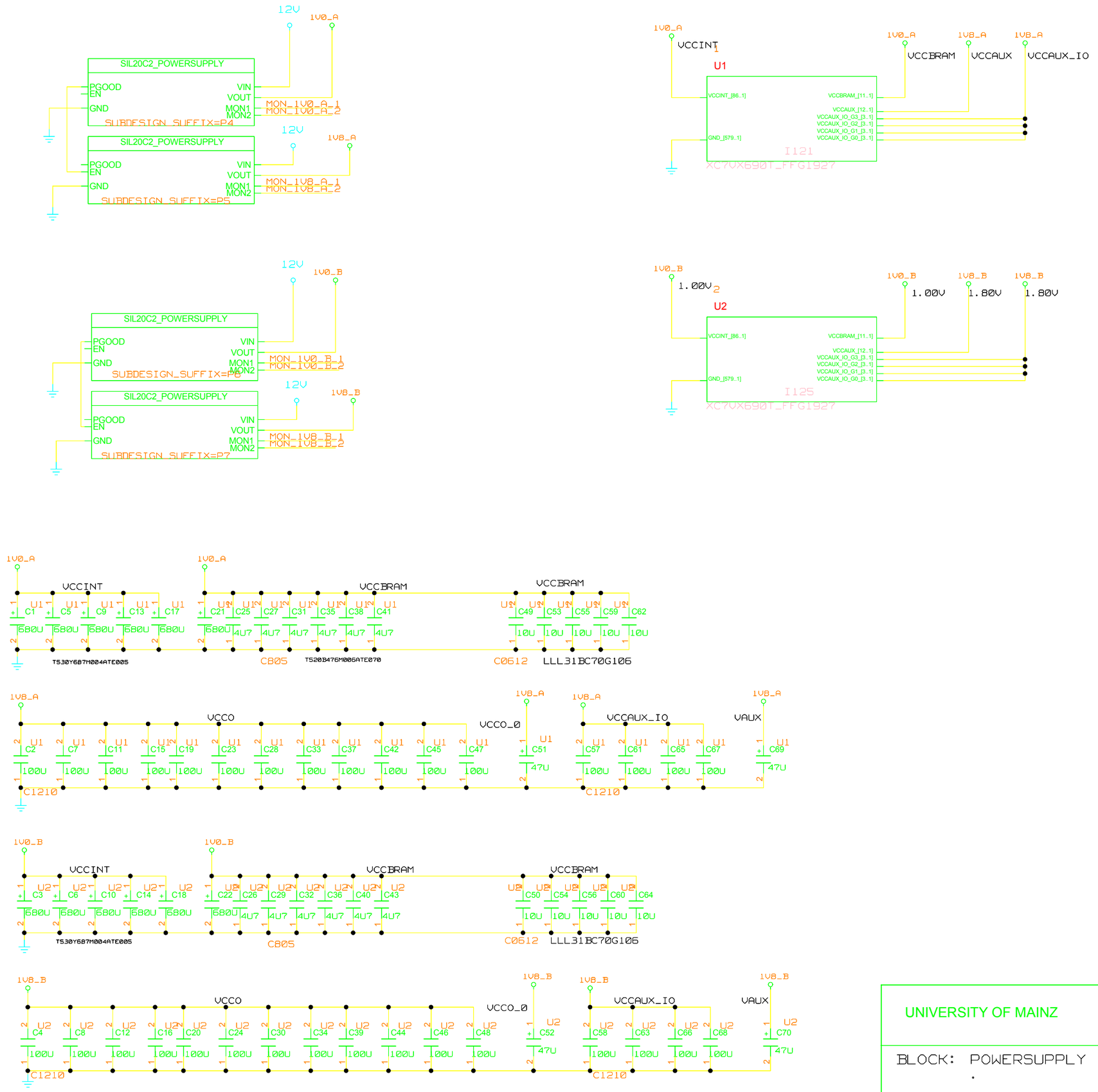

UNIVERSITY OF MAINZ

BLOCK: POWERSUPPLY

DRAWING TITLE: POWER VIRTEX7

SIZE: C | REV. | DRAWING NO.

SCALE | SHEET OF

REVISIONS				
ZONE	LTR	DESCRIPTION	DATE	APPR.

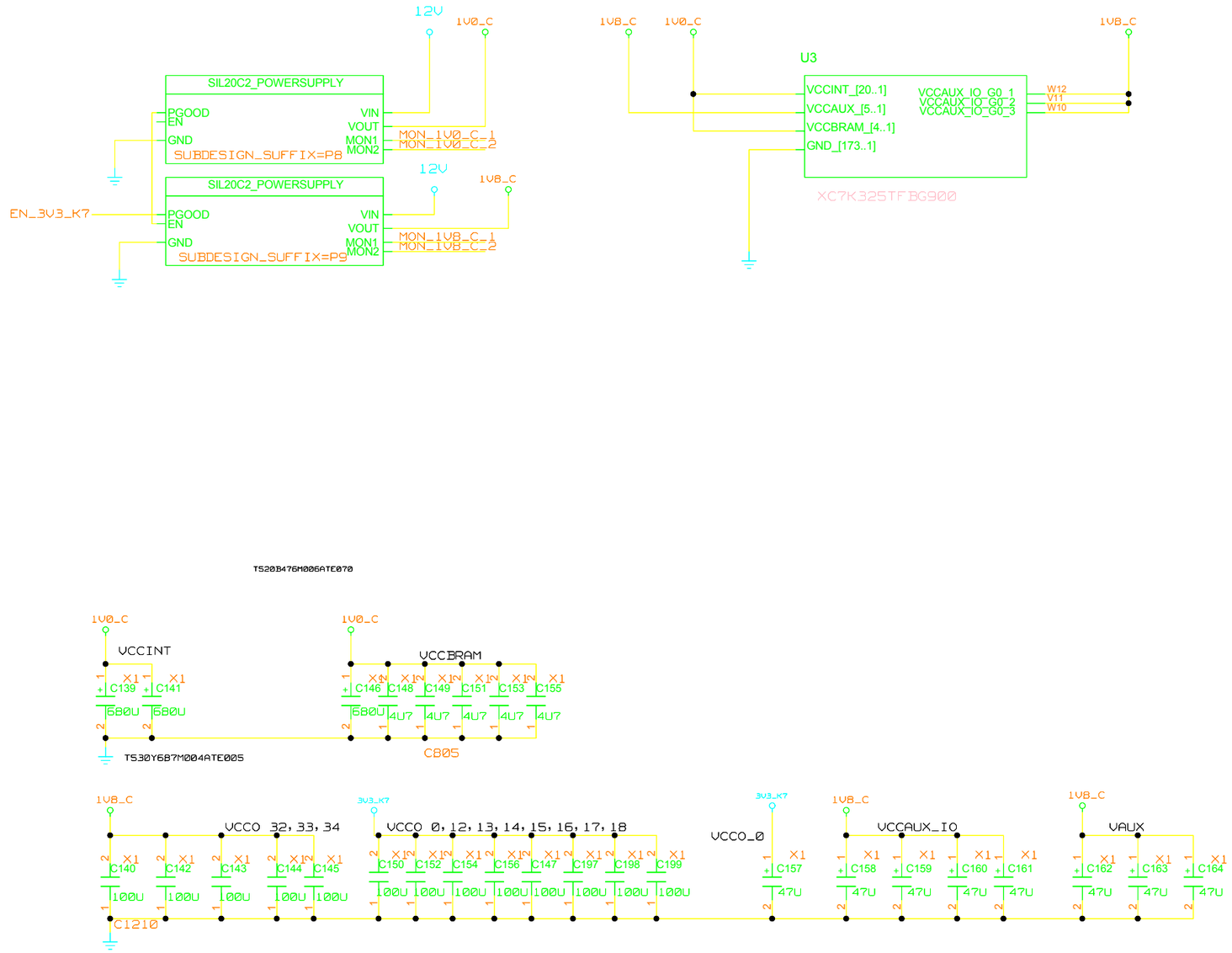

UNIVERSITY OF MAINZ

BLOCK: POWERSUPPLY

DRAWING TITLE: POWER KINTEX7

SIZE: C

REV.

DRAWING NO.

SCALE

SHEET OF

REVISIONS				
ZONE	LTR	DESCRIPTION	DATE	APPR.

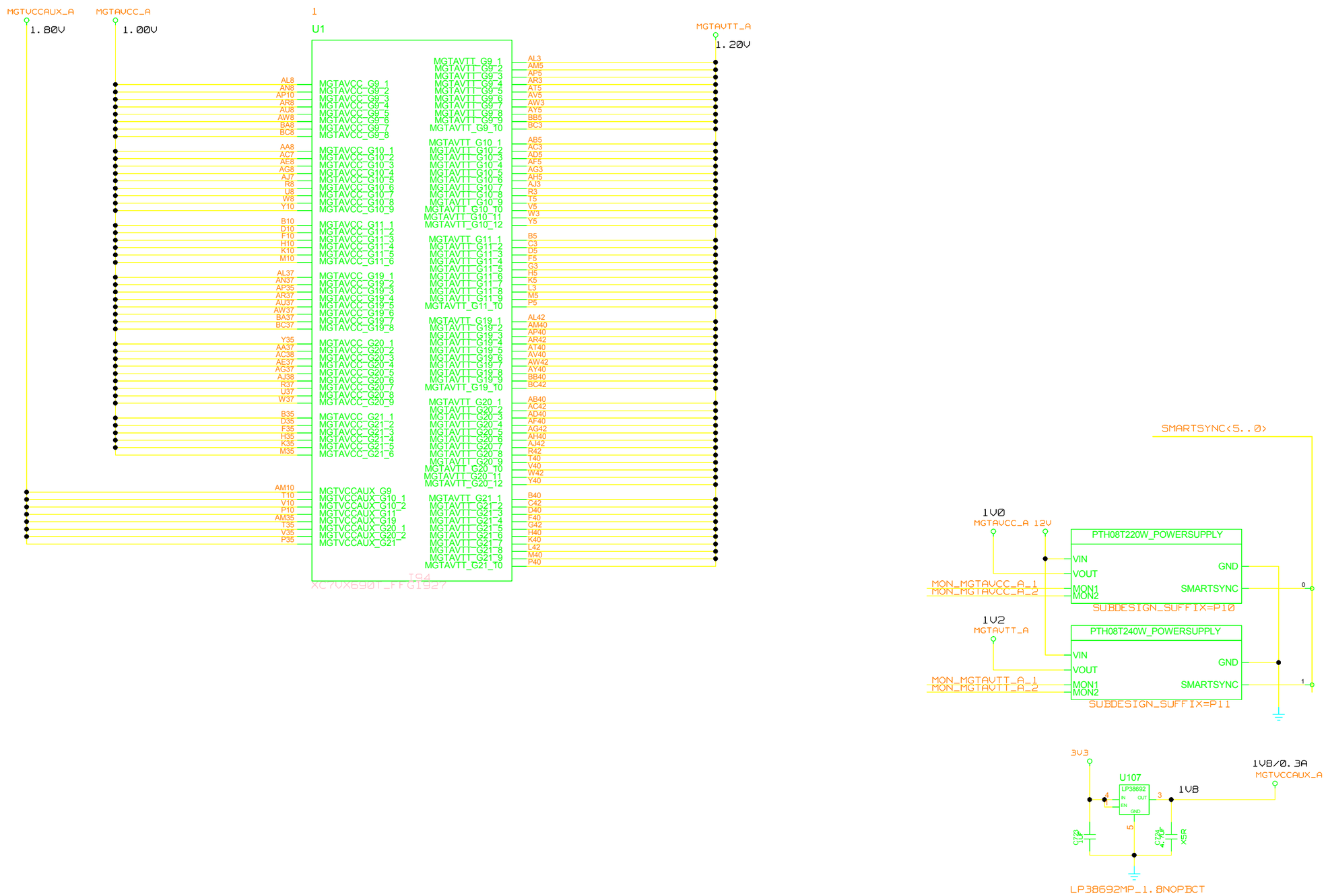

UNIVERSITY OF MAINZ

BLOCK: POWERSUPPLY

DRAWING TITLE: VIRTEX7 MGT POWER

SIZE: C | REV. | DRAWING NO.

SCALE | SHEET OF

REVISIONS				
ZONE	LTR	DESCRIPTION	DATE	APPR.

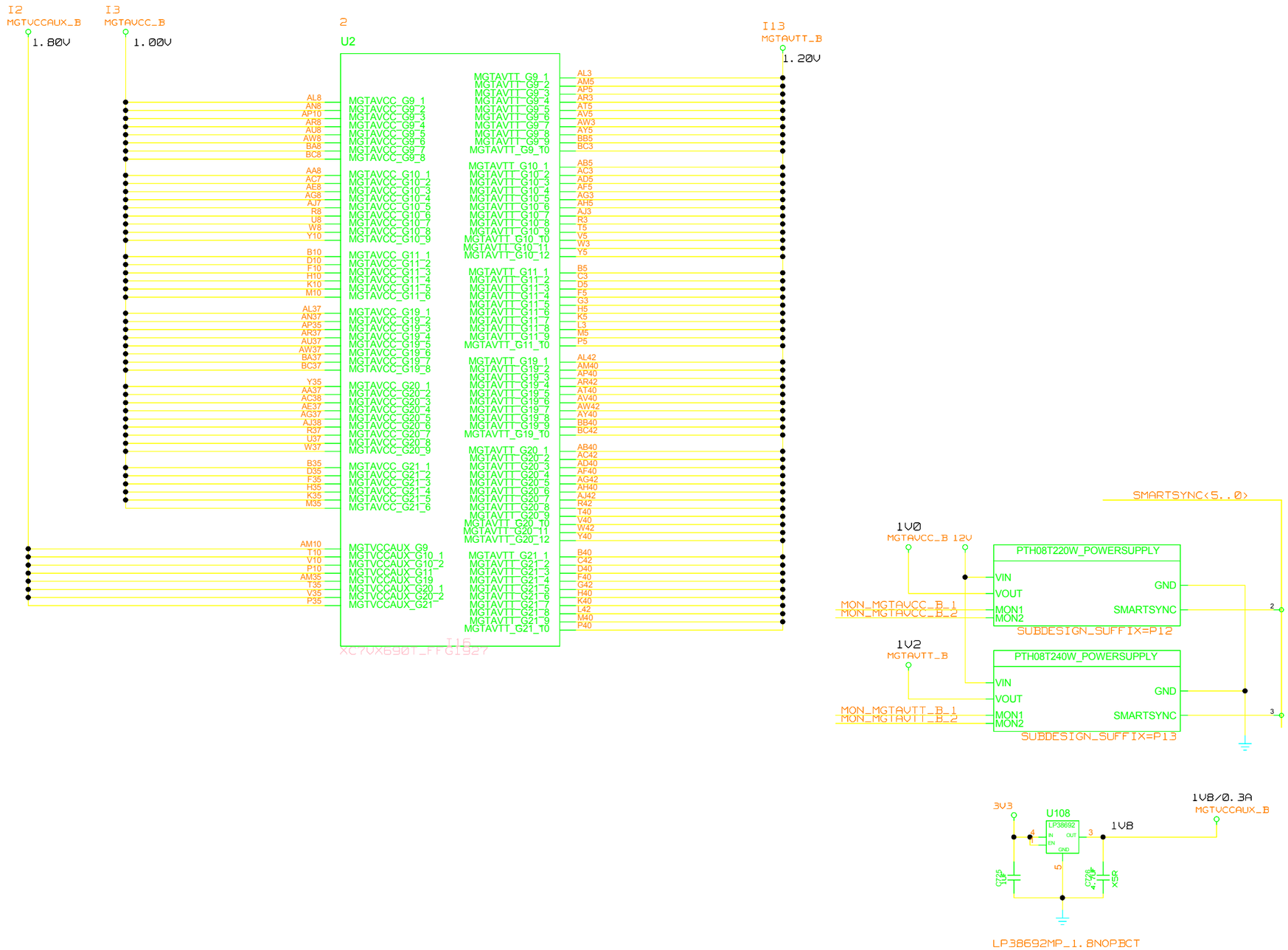

UNIVERSITY OF MAINZ

BLOCK: POWERSUPPLY

DRAWING TITLE: VIRTEX7 MGT POWER

SIZE: C | REV. | DRAWING NO.

SCALE | SHEET OF

REVISIONS				
ZONE	LTR	DESCRIPTION	DATE	APPR.

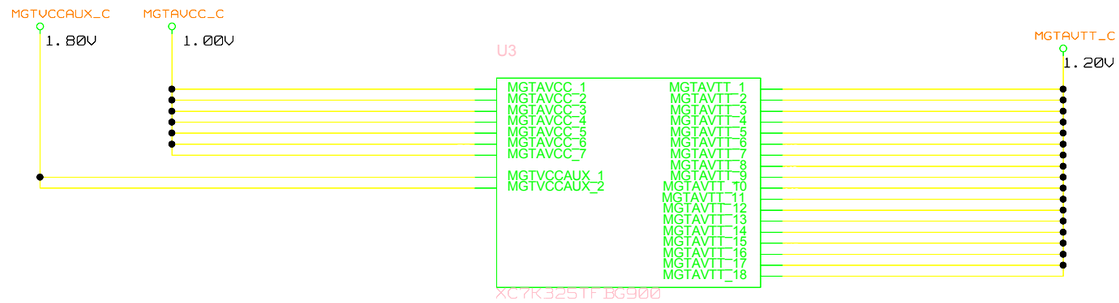

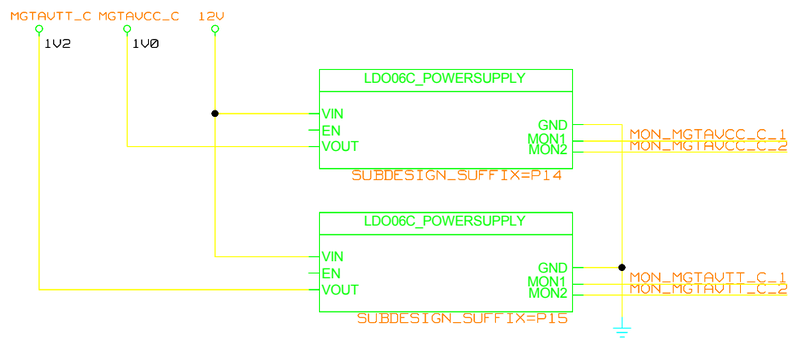

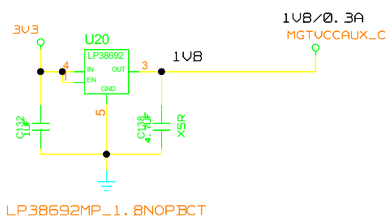

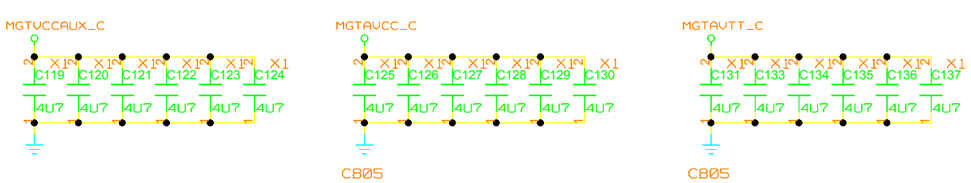

UNIVERSITY OF MAINZ

BLOCK: POWERSUPPLY

DRAWING TITLE: KINTEX7 MGT POWER

SIZE: C | REV. | DRAWING NO.

SCALE | SHEET OF

REVISIONS				
ZONE	LTR	DESCRIPTION	DATE	APPR.

U1 CORE POWER MONITOR

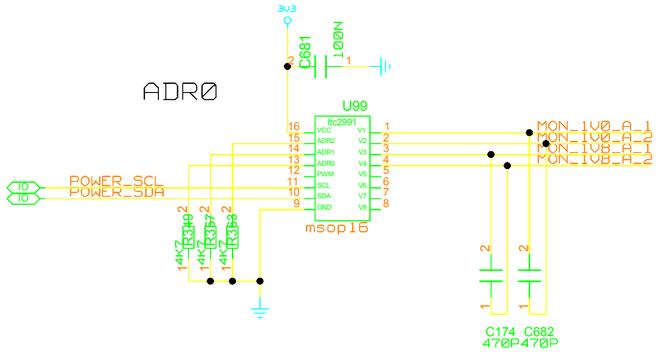

U1 MGT POWER MONITOR

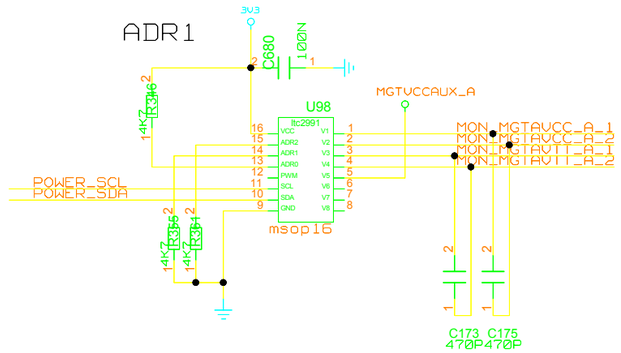

U2 CORE POWER MONITOR

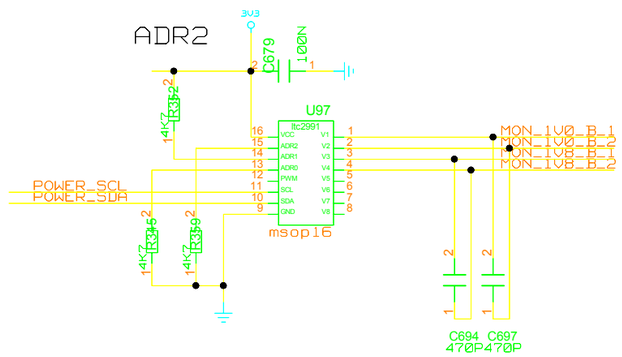

U2 MGT POWER MONITOR

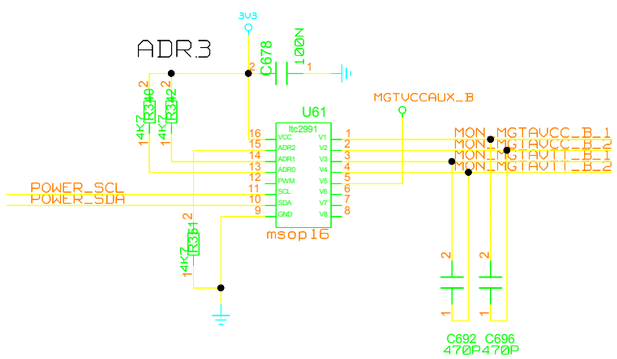

U3 CORE POWER MONITOR

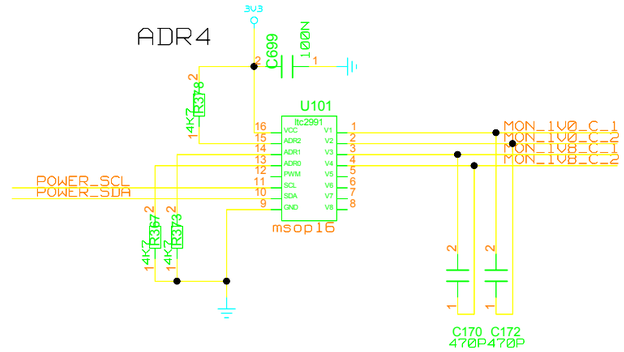

U3 MGT POWER MONITOR

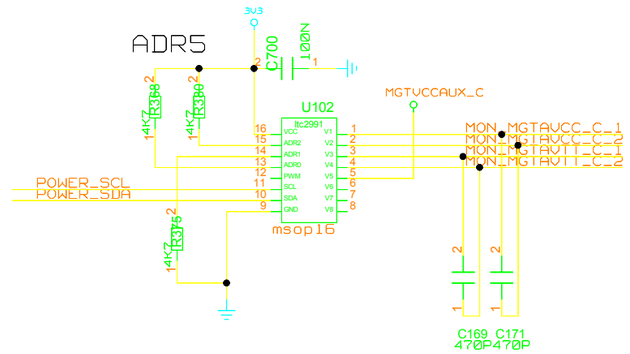

2V5, 3V3 POWER MONITOR

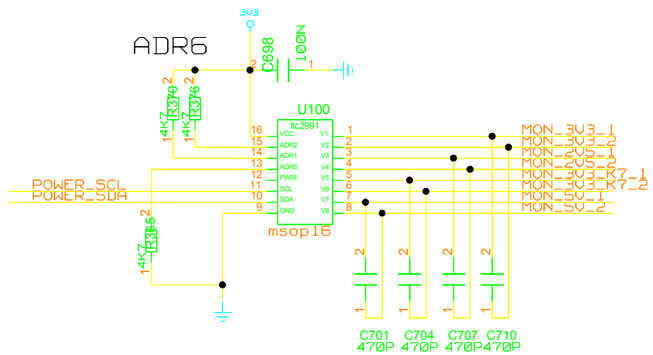

UNIVERSITY OF MAINZ

DRAWING TITLE: I2C POWERSUPPLY MONITORING

SIZE: C | REV.: 26.05.2014 | DRAWING NO.:

SCALE | SHEET OF

REVISIONS				
ZONE	LTR	DESCRIPTION	DATE	APPR.

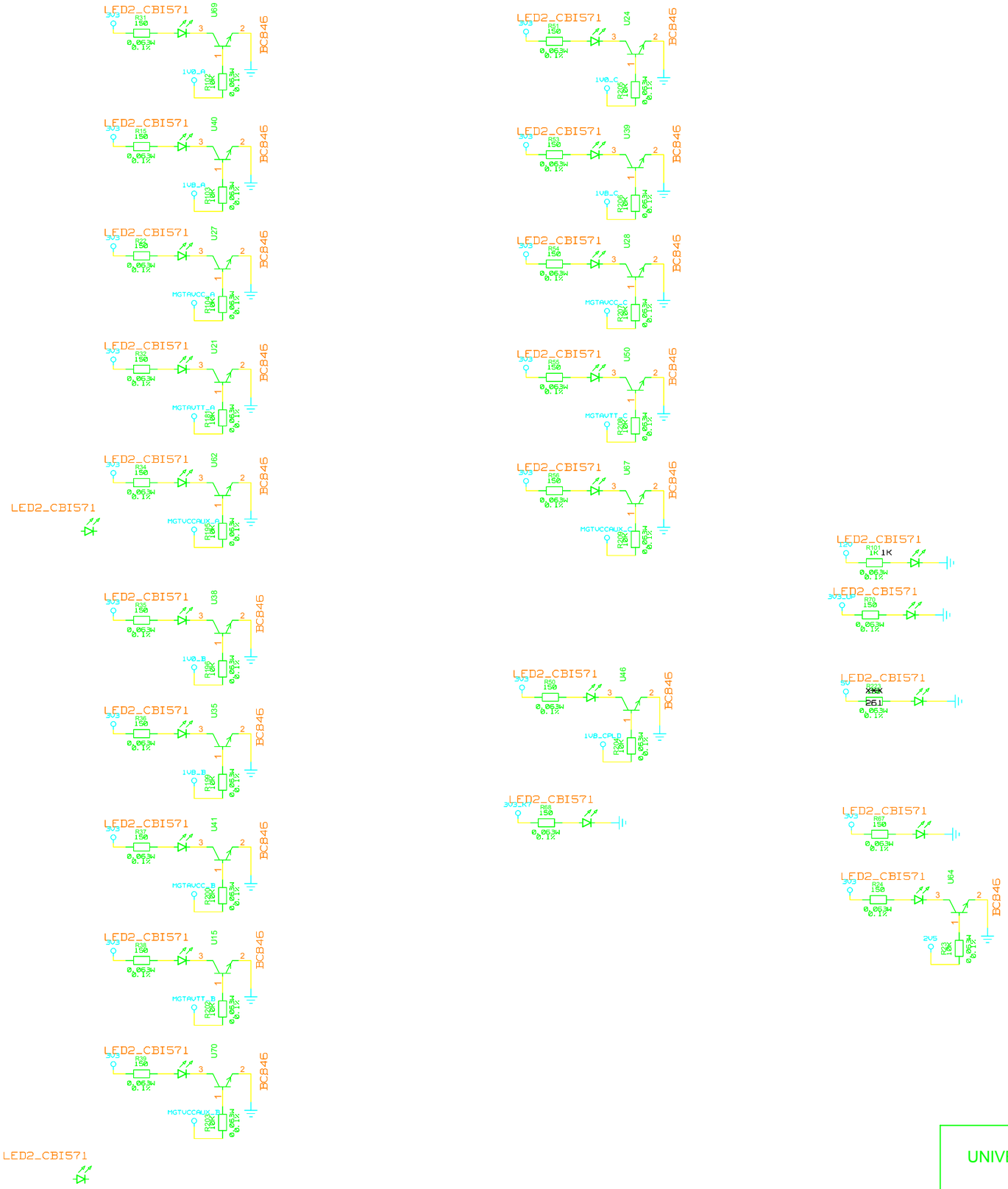

UNIVERSITY OF MAINZ

DRAWING TITLE: POWERSUPPLY LED DISPLAY

SIZE: C

REV.: 27.05.2014

DRAWING NO.

SCALE

SHEET OF

REVISIONS				
ZONE	LTR	DESCRIPTION	DATE	APPR.

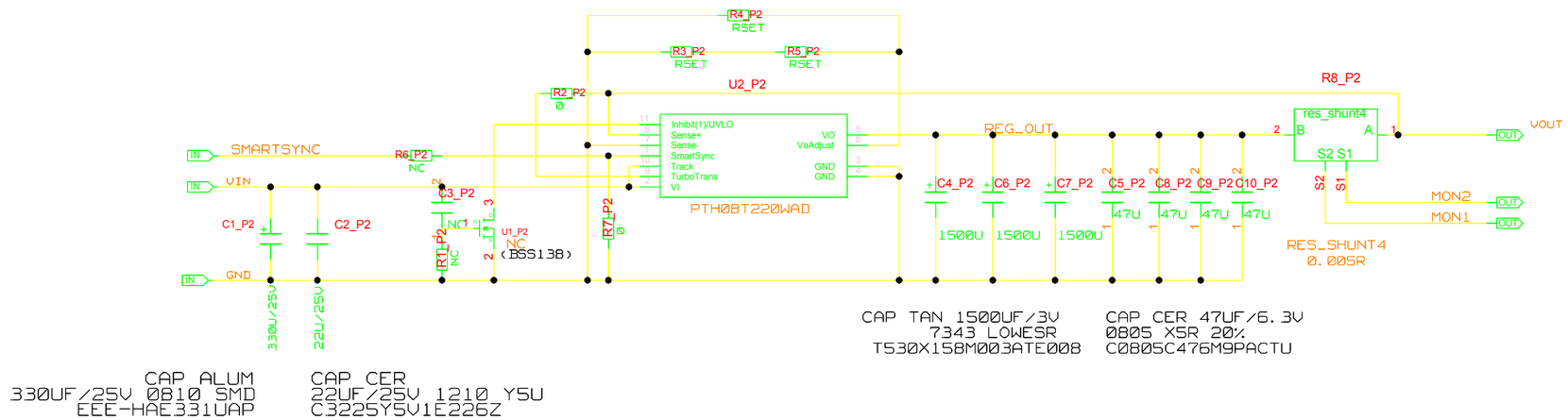

CAP ALUM
330UF/25V 0810 SMD
EEE-HAE331UAP

CAP CER
22UF/25V 1210 Y5U
C3225Y5V1E226Z

CAP TAN 1500UF/3V
7343 LOWESR
T530X158M003ATE008

CAP CER 47UF/6.3V
0805 X5R 20%
C0805C476M9PACTU

$$R_{SET} = 10\ k\Omega \times \frac{0.69}{V_O - 0.69} - 1.43\ k\Omega$$

Table 1. Standard Values of R_{SET} for Standard Output Voltages

V_O (Standard)	R_{SET} (Standard Value)	V_O (Actual)
5.0 V (1)	169 Ω	5.005 V
3.3 V	1.21 kΩ	3.304 V
2.5 V	2.37 kΩ	2.506 V
1.8 V	4.75 kΩ	1.807 V
1.5 V	6.98 kΩ	1.510 V
1.2 V (2)	12.1 kΩ	1.200 V
1.0 V (2)	20.5 kΩ	1.004 V
0.7 V (2)	681 kΩ	0.700 V

UNIVERSITY OF MAINZ

DRAWING TITLE: PTH08T220W_POWER SUPPLY

SIZE: C | REV. | DRAWING NO.

SCALE | SHEET OF

REVISIONS				
ZONE	LTR	DESCRIPTION	DATE	APPR.

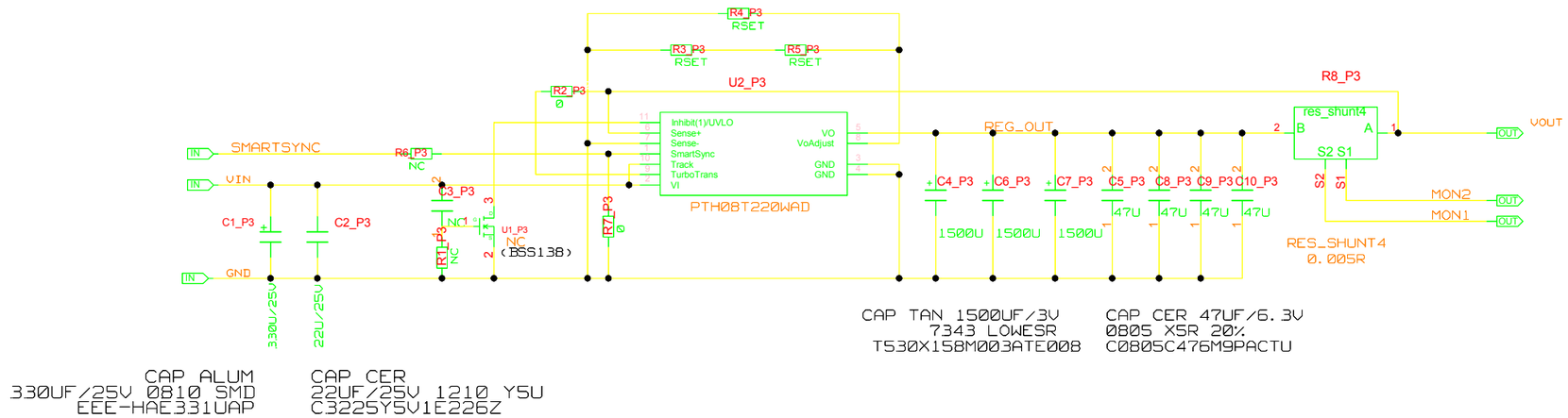

CAP ALUM
330UF/25V 0810 SMD
EEE-HAE331UAP

CAP CER
22UF/25V 1210 Y5U
C3225Y5V1E226Z

CAP TAN 1500UF/3V
7343 LOWESR
T530X158M003ATE008

CAP CER 47UF/6.3V
0805 X5R 20%
C0805C476M9PACTU

$$R_{SET} = 10\ k\Omega \times \frac{0.69}{V_O - 0.69} - 1.43\ k\Omega$$

Table 1. Standard Values of R_{SET} for Standard Output Voltages

V_O (Standard)	R_{SET} (Standard Value)	V_O (Actual)
5.0 V (1)	169 Ω	5.005 V
3.3 V	1.21 kΩ	3.304 V
2.5 V	2.37 kΩ	2.506 V
1.8 V	4.75 kΩ	1.807 V
1.5 V	6.98 kΩ	1.510 V
1.2 V (2)	12.1 kΩ	1.200 V
1.0 V (2)	20.5 kΩ	1.004 V
0.7 V (2)	681 kΩ	0.700 V

UNIVERSITY OF MAINZ

DRAWING TITLE: PTH08T220W_POWER SUPPLY

SIZE: C | REV. | DRAWING NO.

SCALE | SHEET OF

REVISIONS				
ZONE	LTR	DESCRIPTION	DATE	APPR.

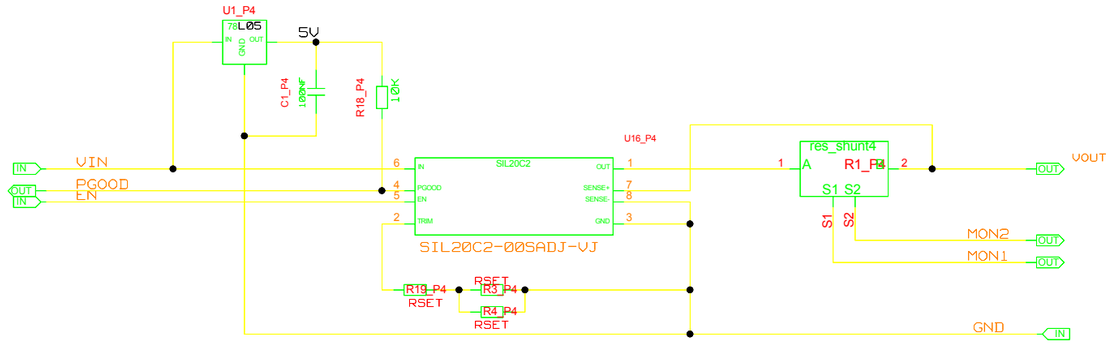

The resistor trim equation for the SIL20C2 is as follows:

$$\text{Rtrim } (k\Omega) = \frac{1.182}{(\text{Vout} - 0.591)}$$

UNIVERSITY OF MAINZ	DRAWING TITLE: SIL20C2_POWERSUPPLY		
	SIZE: C	REV.	DRAWING NO.
	SCALE		SHEET OF

REVISIONS				
ZONE	LTR	DESCRIPTION	DATE	APPR.

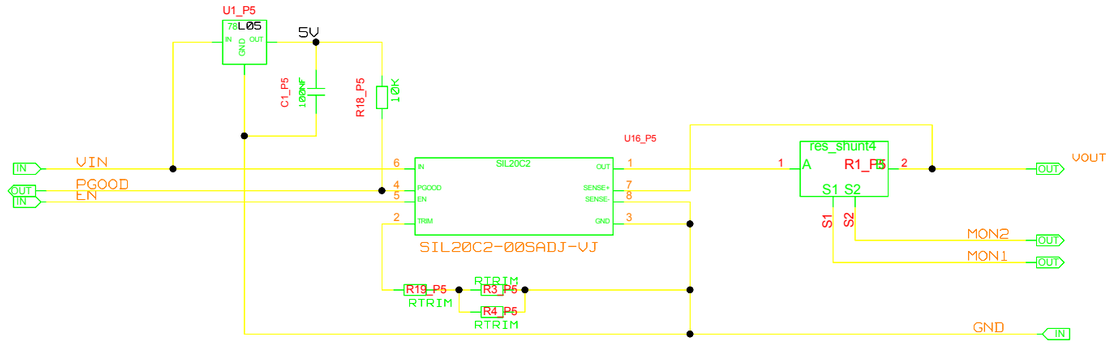

The resistor trim equation for the SIL20C2 is as follows:

$$\text{Rtrim } (k\Omega) = \frac{1.182}{(\text{Vout} - 0.591)}$$

UNIVERSITY OF MAINZ	DRAWING TITLE: SIL20C2_POWERSUPPLY
	SIZE: C; REV.; DRAWING NO.
	SCALE; SHEET OF

REVISIONS				
ZONE	LTR	DESCRIPTION	DATE	APPR.

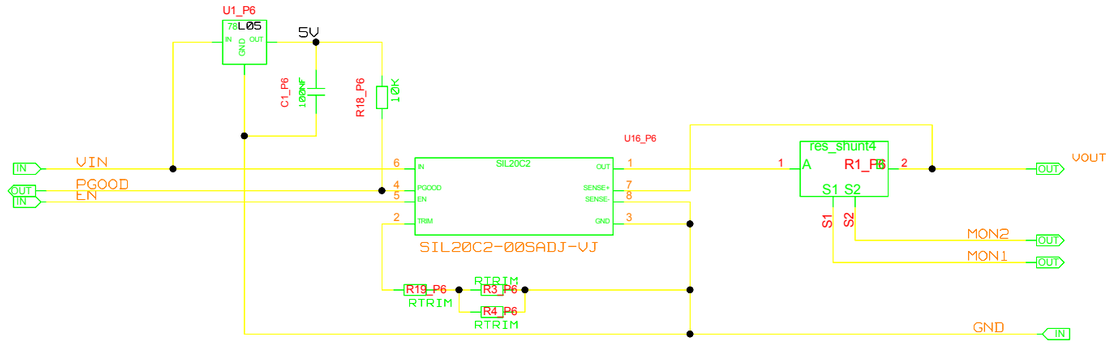

The resistor trim equation for the SIL20C2 is as follows:

$$\text{Rtrim } (k\Omega) = \frac{1.182}{(\text{Vout} - 0.591)}$$

UNIVERSITY OF MAINZ	DRAWING TITLE: SIL20C2_POWERSUPPLY		
	SIZE: C	REV.	DRAWING NO.
	SCALE		SHEET OF

REVISIONS				
ZONE	LTR	DESCRIPTION	DATE	APPR.

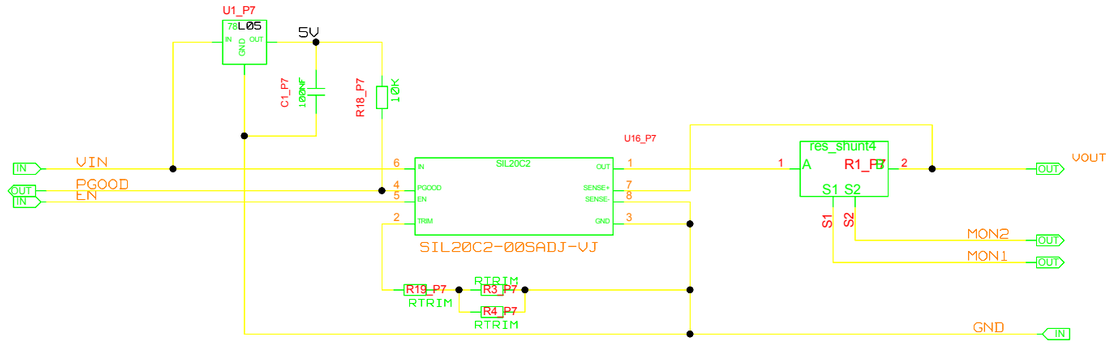

The resistor trim equation for the SIL20C2 is as follows:

$$\text{Rtrim } (k\Omega) = \frac{1.182}{(\text{Vout} - 0.591)}$$

UNIVERSITY OF MAINZ	DRAWING TITLE: SIL20C2_POWERSUPPLY		
	SIZE: C	REV.	DRAWING NO.
	SCALE		SHEET OF

REVISIONS				
ZONE	LTR	DESCRIPTION	DATE	APPR.

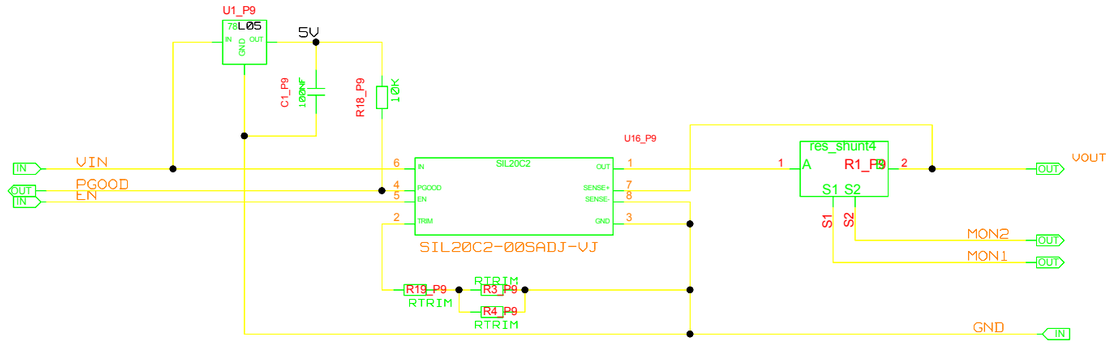

The resistor trim equation for the SIL20C2 is as follows:

$$\text{Rtrim } (k\Omega) = \frac{1.182}{(\text{Vout} - 0.591)}$$

UNIVERSITY OF MAINZ	DRAWING TITLE: SIL20C2_POWERSUPPLY
	SIZE: C; REV.; DRAWING NO.
	SCALE; SHEET OF

REVISIONS				
ZONE	LTR	DESCRIPTION	DATE	APPR.

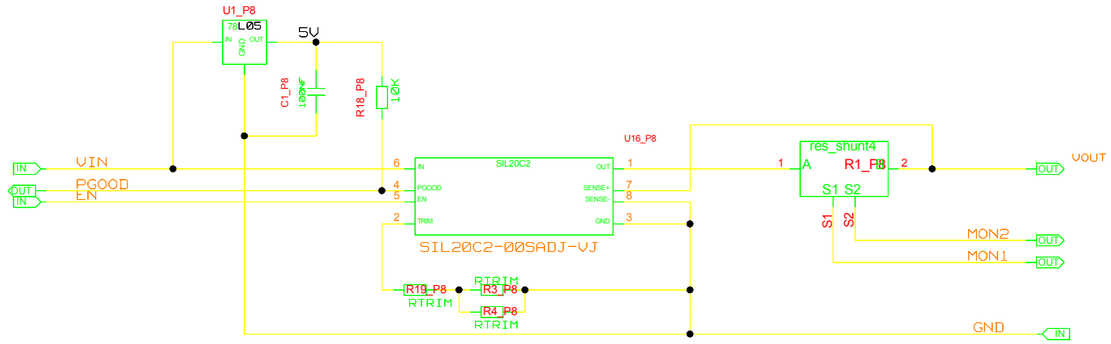

The resistor trim equation for the SIL20C2 is as follows:

$$\text{Rtrim } (k\Omega) = \frac{1.182}{(\text{Vout} - 0.591)}$$

UNIVERSITY OF MAINZ	DRAWING TITLE: SIL20C2_POWERSUPPLY
	SIZE: C; REV.; DRAWING NO.
	SCALE; SHEET OF

REVISIONS				
ZONE	LTR	DESCRIPTION	DATE	APPR.

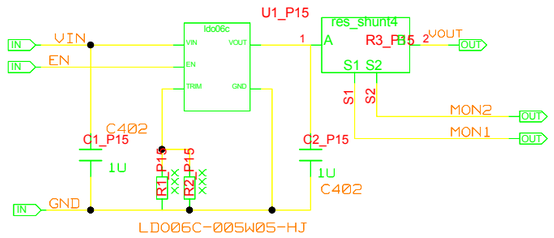

RTRIM(K)=1.182/(VOUT-0.591)

UNIVERSITY OF MAINZ

DRAWING TITLE

LD006C_POWERSUPPLY

SIZE C

REV.

DRAWING NO.

SCALE

SHEET OF

REVISIONS				
ZONE	LTR	DESCRIPTION	DATE	APPR.

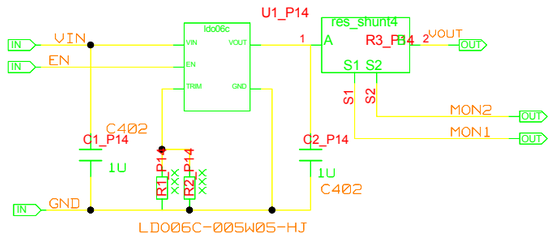

RTRIM(K)=1.182/(VOUT-0.591)

UNIVERSITY OF MAINZ

DRAWING TITLE

LD006C_POWERSUPPLY

SIZE C

REV.

DRAWING NO.

SCALE

SHEET OF

REVISIONS				
ZONE	LTR	DESCRIPTION	DATE	APPR.

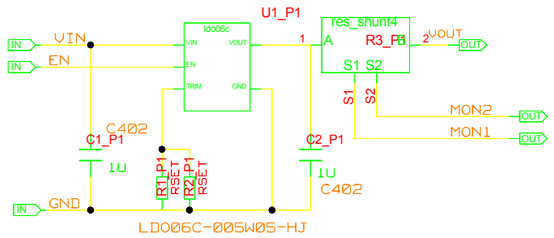

RTRIM(K)=1.182/(VOUT-0.591)

UNIVERSITY OF MAINZ

DRAWING TITLE

LD006C_POWERSUPPLY

SIZE C

REV.

DRAWING NO.

SCALE

SHEET OF

REVISIONS				
ZONE	LTR	DESCRIPTION	DATE	APPR.

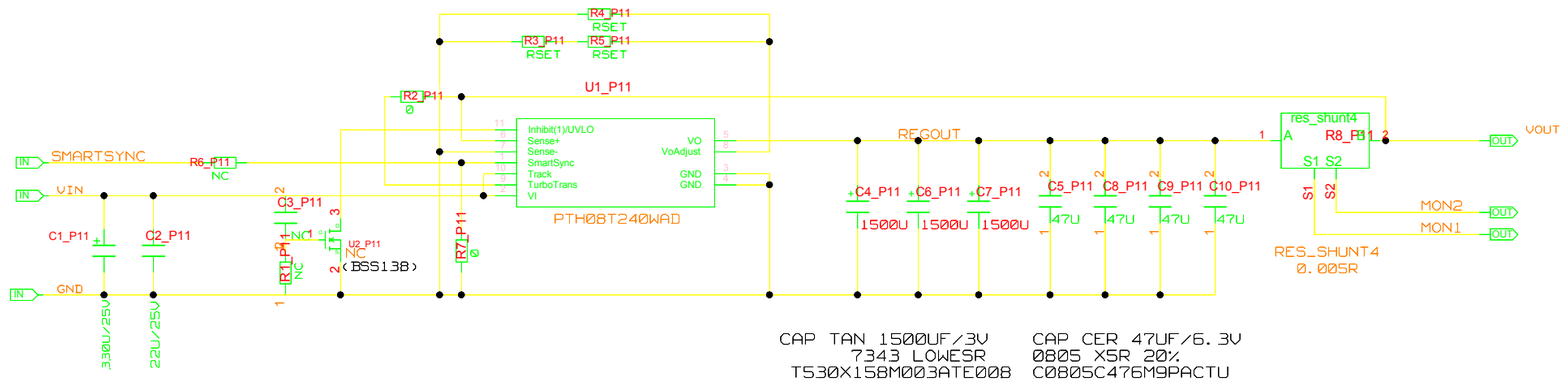

CAP ALUM
330UF/25V 0810 SMD
EEE-HAE331UAP

CAP CER
22UF/25V 1210 Y5U
C3225Y5V1E226Z

CAP TAN 1500UF/3V
7343 LOWESR
T530X158M003ATE008

CAP CER 47UF/6.3V
0805 X5R 20%
C0805C476M9PACTU

Table 2. Output Voltage Set-Point Resistor Values (Standard Values)

V_O Required (V)	R_{SET} (kΩ)	V_O Required (V)	R_{SET} (Ω)
0.70 (1)	681	2.50	2.37 k
0.75 (1)	113	2.60	2.15 k
0.80 (1)	61.9	2.70	2.00 k
0.85 (1)	41.2	2.80	1.82 k
0.90 (1)	31.6	2.90	1.69 k
0.95 (1)	24.9	3.00	1.54 k
1.00 (1)	20.5	3.10	1.43 k
1.05 (1)	17.8	3.20	1.33 k
1.10 (1)	15.4	3.30	1.21 k
1.15 (1)	13.3	3.40	1.10 k
1.20 (1)	12.1	3.50	1.02 k
1.25	10.7	3.60	931
1.30	9.88	3.70 (2)	866
1.35	9.09	3.80 (2)	767
1.40	8.25	3.90 (2)	715
1.45	7.68	4.00 (2)	649
1.50	6.98	4.10 (2)	590
1.55	6.49	4.20 (2)	536
1.60	6.04	4.30 (2)	475
1.65	5.76	4.40 (2)	432
1.70	5.36	4.50 (2)	383
1.75	5.11	4.60 (2)	332
1.80	4.75	4.70 (2)	287
1.85	4.53	4.80 (2)	249
1.90	4.22	4.90 (2)	210
1.95	4.02	5.00 (2)	169
2.00	3.83	5.10 (2)	133
2.10	3.40	5.20 (2)	100
2.20	3.09	5.30 (2)	66.5
2.30	2.67	5.40 (2)	34.8
2.40	2.61	5.50 (2)	4.99

(1) For output voltages ≤ 1.2V, at nominal operating frequency, the output ripple may increase (typically 2×) when operating at input voltages greater than (V_O × 11). When using the SmartSync feature, review the SmartSync application section for further guidance.
(2) For V_O > 3.6 V, the minimum input voltage is (V_O + 2) V.

UNIVERSITY OF MAINZ

DRAWING TITLE
PTH08T240W_POWERSUPPLY

SIZE C | REV. | DRAWING NO.

SCALE | SHEET OF

REVISIONS				
ZONE	LTR	DESCRIPTION	DATE	APPR.

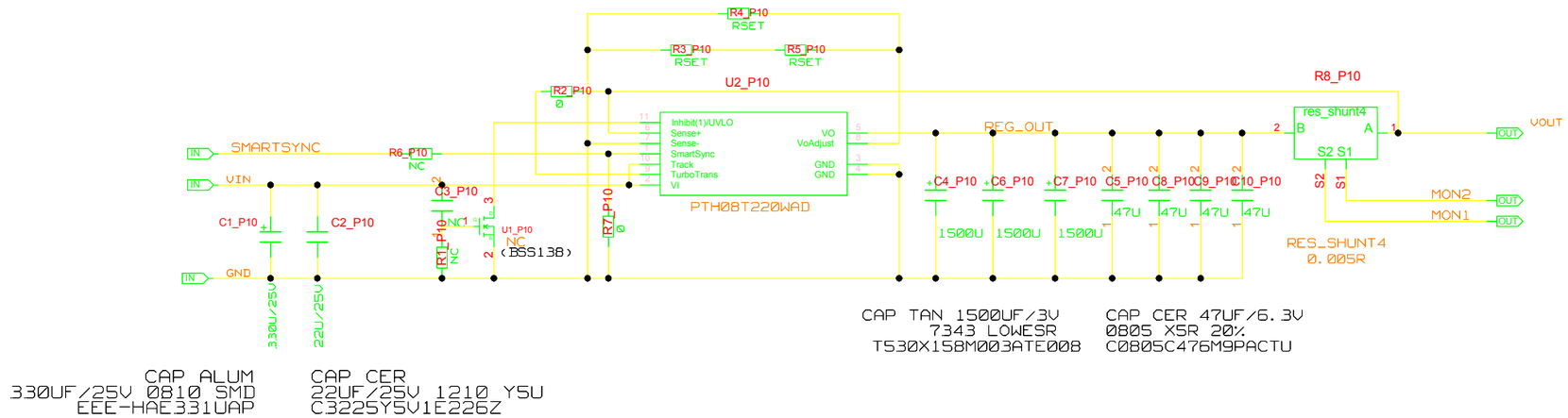

$$R_{SET} = 10\ k\Omega \times \frac{0.69}{V_O - 0.69} - 1.43\ k\Omega$$

Table 1. Standard Values of R_{SET} for Standard Output Voltages

V_O (Standard)	R_{SET} (Standard Value)	V_O (Actual)
5.0 V (1)	169 Ω	5.005 V
3.3 V	1.21 kΩ	3.304 V
2.5 V	2.37 kΩ	2.506 V
1.8 V	4.75 kΩ	1.807 V
1.5 V	6.98 kΩ	1.510 V
1.2 V (2)	12.1 kΩ	1.200 V
1.0 V (2)	20.5 kΩ	1.004 V
0.7 V (2)	681 kΩ	0.700 V

UNIVERSITY OF MAINZ

DRAWING TITLE: PTH08T220W_POWER SUPPLY

SIZE: C | REV. | DRAWING NO.

SCALE | SHEET OF

REVISIONS				
ZONE	LTR	DESCRIPTION	DATE	APPR.

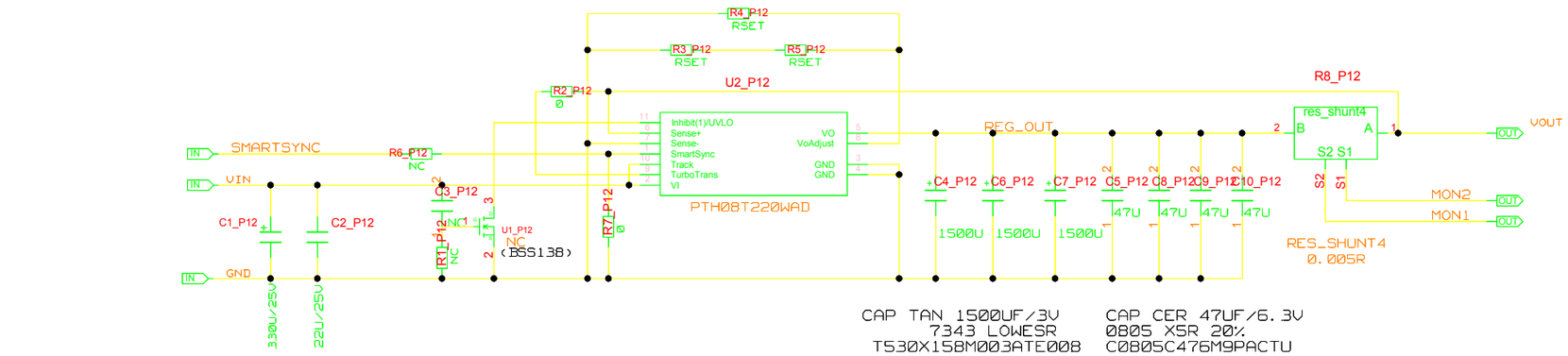

$$R_{SET} = 10\ k\Omega \times \frac{0.69}{V_O - 0.69} - 1.43\ k\Omega$$

Table 1. Standard Values of R_{SET} for Standard Output Voltages

V_O (Standard)	R_{SET} (Standard Value)	V_O (Actual)
5.0 V (1)	169 Ω	5.005 V
3.3 V	1.21 kΩ	3.304 V
2.5 V	2.37 kΩ	2.506 V
1.8 V	4.75 kΩ	1.807 V
1.5 V	6.98 kΩ	1.510 V
1.2 V (2)	12.1 kΩ	1.200 V
1.0 V (2)	20.5 kΩ	1.004 V
0.7 V (2)	681 kΩ	0.700 V

UNIVERSITY OF MAINZ

DRAWING TITLE: PTH08T220W_POWER SUPPLY

SIZE: C | REV. | DRAWING NO.

SCALE | SHEET OF

REVISIONS				
ZONE	LTR	DESCRIPTION	DATE	APPR.

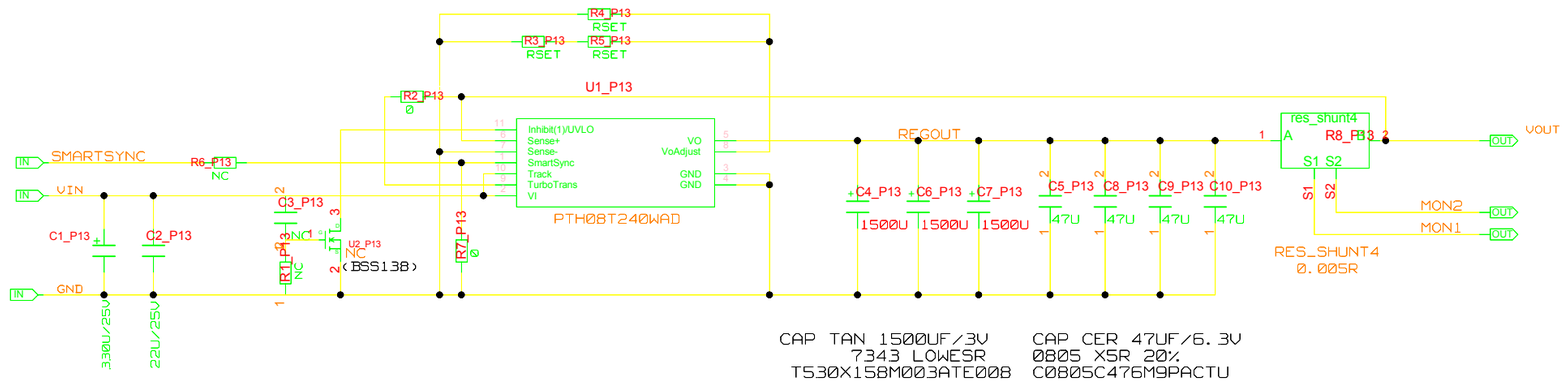

CAP ALUM
330UF/25V 0810 SMD
EEE-HAE331UAP

CAP CER
22UF/25V 1210 Y5U
C3225Y5V1E226Z

CAP TAN 1500UF/3V
7343 LOWESR
T530X158M003ATE008

CAP CER 47UF/6.3V
0805 X5R 20%
C0805C476M9PACTU

Table 2. Output Voltage Set-Point Resistor Values (Standard Values)

V_O Required (V)	R_{SET} (kΩ)	V_O Required (V)	R_{SET} (Ω)
0.70 (1)	681	2.50	2.37 k
0.75 (1)	113	2.60	2.15 k
0.80 (1)	61.9	2.70	2.00 k
0.85 (1)	41.2	2.80	1.82 k
0.90 (1)	31.6	2.90	1.69 k
0.95 (1)	24.9	3.00	1.54 k
1.00 (1)	20.5	3.10	1.43 k
1.05 (1)	17.8	3.20	1.33 k
1.10 (1)	15.4	3.30	1.21 k
1.15 (1)	13.3	3.40	1.10 k
1.20 (1)	12.1	3.50	1.02 k
1.25	10.7	3.60	931
1.30	9.88	3.70 (2)	866
1.35	9.09	3.80 (2)	767
1.40	8.25	3.90 (2)	715
1.45	7.68	4.00 (2)	649
1.50	6.98	4.10 (2)	590
1.55	6.49	4.20 (2)	536
1.60	6.04	4.30 (2)	475
1.65	5.76	4.40 (2)	432
1.70	5.36	4.50 (2)	383
1.75	5.11	4.60 (2)	332
1.80	4.75	4.70 (2)	287
1.85	4.53	4.80 (2)	249
1.90	4.22	4.90 (2)	210
1.95	4.02	5.00 (2)	169
2.00	3.83	5.10 (2)	133
2.10	3.40	5.20 (2)	100
2.20	3.09	5.30 (2)	66.5
2.30	2.67	5.40 (2)	34.8
2.40	2.61	5.50 (2)	4.99

(1) For output voltages ≤ 1.2V, at nominal operating frequency, the output ripple may increase (typically 2×) when operating at input voltages greater than (V_O × 11). When using the SmartSync feature, review the SmartSync application section for further guidance.
(2) For V_O > 3.6 V, the minimum input voltage is (V_O + 2) V.

UNIVERSITY OF MAINZ

DRAWING TITLE
PTH08T240W_POWERSUPPLY

SIZE C | REV. | DRAWING NO.

SCALE | SHEET OF

REVISIONS				
ZONE	LTR	DESCRIPTION	DATE	APPR.

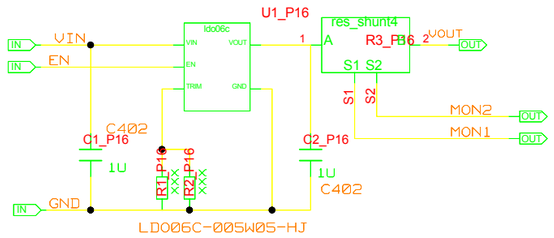

RTRIM(K)=1.182/(VOUT-0.591)

UNIVERSITY OF MAINZ

DRAWING TITLE

LD006C_POWERSUPPLY

SIZE C | REV. | DRAWING NO.

SCALE | SHEET OF

REVISIONS				
ZONE	LTR	DESCRIPTION	DATE	APPR.

TTC CLOCK MGT1

EXTENSION MODUL

CLOCK_LVPECL_SI591_AC
U4_39
CLK_P — CLK_MGT1_P
CLK_N — CLK_MGT1_N

CLOCK_CML_FANOUT6_DC
U52_20
SY58034U_DC_CML
CLK1_IN_P, CLK1_IN_N, CLK2_IN_P, CLK2_IN_N
CLK_OUT_P<5..0> — MGT1_OSC_P<5..0>
CLK_OUT_N<5..0> — MGT1_OSC_N<5..0>
SEL

CML DC

CLKIN=LVPECL_AC
R1=NC C1=10NF
R2=NC C2=10NF
R3=0 R4=0

MGT1_OSC_P<0>
MGT1_OSC_N<0>
EXT_CLK_P<1>
EXT_CLK_N<1>
---> EXT CLOCK
MUX_SEL<0>
MUX_SEL<1>

MUX_CML_4X2_DC
U1_25
SY56028XR_DC_CML
CLK1_IN_P, CLK1_IN_N, CLK2_IN_P, CLK2_IN_N, CLK3_IN_P, CLK3_IN_N, CLK4_IN_P, CLK4_IN_N
CLK_OUT_P_1, CLK_OUT_N_1, CLK_OUT_P_2, CLK_OUT_N_2, SEL0, SEL1
R21 100 — U30, U42

CLK1IN=CML_DC
CLK2IN=CML_AC
CLK3IN=CML_AC
CLK4IN=NC
R3=NC C1=NC
R4=NC C2=100NF
R5=NC C3=100NF
R6=NC C4=NC

CLOCK_CML_FANOUT6_DC
U52_19
SY58034U_DC_CML
CLK1_IN_P, CLK1_IN_N, CLK2_IN_P, CLK2_IN_N
CLK_OUT_P<5..0> — MGT1_1_CLK_P<5..0>
CLK_OUT_N<5..0> — MGT1_1_CLK_N<5..0>
SEL

CLKIN=CML
R1=NC C1=NC
R2=NC C2=NC
R3=NC R4=NC

CLOCK_CML_FANOUT6_AC
U52_5
SY58034U_DC_CML
CLK1_IN_P, CLK1_IN_N, CLK2_IN_P, CLK2_IN_N
CLK_OUT_P<5..0> — MGT1_CLK_P<6..1>
CLK_OUT_N<5..0> — MGT1_CLK_N<6..1>
SEL
A LEFT

CLOCK_CML_FANOUT6_AC
U52_6
SY58034U_DC_CML
CLK1_IN_P, CLK1_IN_N, CLK2_IN_P, CLK2_IN_N
CLK_OUT_P<5..0> — MGT1_CLK_P<12..7>
CLK_OUT_N<5..0> — MGT1_CLK_N<12..7>
SEL
B RIGHT

CLOCK_CML_FANOUT6_AC
U52_7
SY58034U_DC_CML
CLK1_IN_P, CLK1_IN_N, CLK2_IN_P, CLK2_IN_N
CLK_OUT_P<5..0> — MGT1_CLK_P<18..13>
CLK_OUT_N<5..0> — MGT1_CLK_N<18..13>
SEL
C LEFT

CLOCK_CML_FANOUT6_AC
U52_8
SY58034U_DC_CML
CLK1_IN_P, CLK1_IN_N, CLK2_IN_P, CLK2_IN_N
CLK_OUT_P<5..0> — MGT1_CLK_P<24..19>
CLK_OUT_N<5..0> — MGT1_CLK_N<24..19>
SEL
D RIGHT

TTC-CLK<0> = JITTERCLEANER
TTC-CLK<1> = GCK
TTC-CLK<2> = EXTENSION_MODUL
TTC-CLK<3> = MMCX_SPARE

TTC_OPTO_IN
TTC_P, TTC_N, DETECT
TTC_IN_P, TTC_IN_N

TTC
IN_P, IN_N, TTC_CTRL<56..0>
TTC_CLK_P<0>, TTC_CLK_N<0>, TTC_CLK_P<3..1>, TTC_CLK_N<3..1>

LVDS

JITTERCLEANER_SI5326
U54
DIFF1_P, DIFF1_N, DIFF2_P, DIFF2_N, CTRL<12..0>
DIFF1OUT_P, DIFF1OUT_N, DIFF2OUT_P, DIFF2OUT_N
CML AC

TTC_CLK_P<0> — TTC_CLK_P<0>
TTC_CLK_N<0> — TTC_CLK_N<0>
JC_OUT2_P
JC_OUT2_N

TTC_DETECT (OUT)
TTC_CTRL<56..0> (IO)
JC_CTRL<12..0> (IO)

EXT_CLK_P<0>
EXT_CLK_N<0>
---->EXT_TTC_INPUT

TTC_CLK_P<3>
TTC_CLK_N<3>

<---EXT_GCK_CLOCK
EXT_CLK_P<5> — R20 NC
EXT_CLK_N<5> — R21 NC

TTC_CLK_P<3..1>
TTC_CLK_N<3..1>
TO GCK

MGT1_CLK_KINTEX U3
C453 100NF — MGT1_CLK_P<25>
C454 100NF — MGT1_CLK_N<25>

MGT1_CLK_P<6..1>
MGT1_CLK_P<12..7>
MGT1_CLK_P<18..13>
MGT1_CLK_P<24..19>
MGT1_CLK_P<25>
MGT1_CLK_P<25..1> (OUT)

MGT1 CLOCK

MGT1_CLK_N<6..1>
MGT1_CLK_N<12..7>
MGT1_CLK_N<18..13>
MGT1_CLK_N<24..19>
MGT1_CLK_N<25>
MGT1_CLK_N<25..1> (OUT)

EXT_CLK_P/N 0 JT
EXT_CLK_P/N 1 MGT1
EXT_CLK_P/N 2 MGT2
EXT_CLK_P/N 3 MGT3
EXT_CLK_P/N 4 MGT4
EXT_CLK_P/N 5 TTC OUT
EXT_CLK_P/N 6 GCK1

EXT_CLK_P<6..0> (IO)
EXT_CLK_N<6..0> (IO)
MUX_SEL<9..0> (IN)

UPDATE PICK & PLACE DATA FOR FANOUT AND MUX

UNIVERSITY OF MAINZ	DRAWING TITLE: MGT1 CLOCK CML		
BLOCK: CLOCK	SIZE: C	REV. 27.05.2014	DRAWING NO.
	SCALE		SHEET OF

REVISIONS				
ZONE	LTR	DESCRIPTION	DATE	APPR.

MGT2 CLOCK

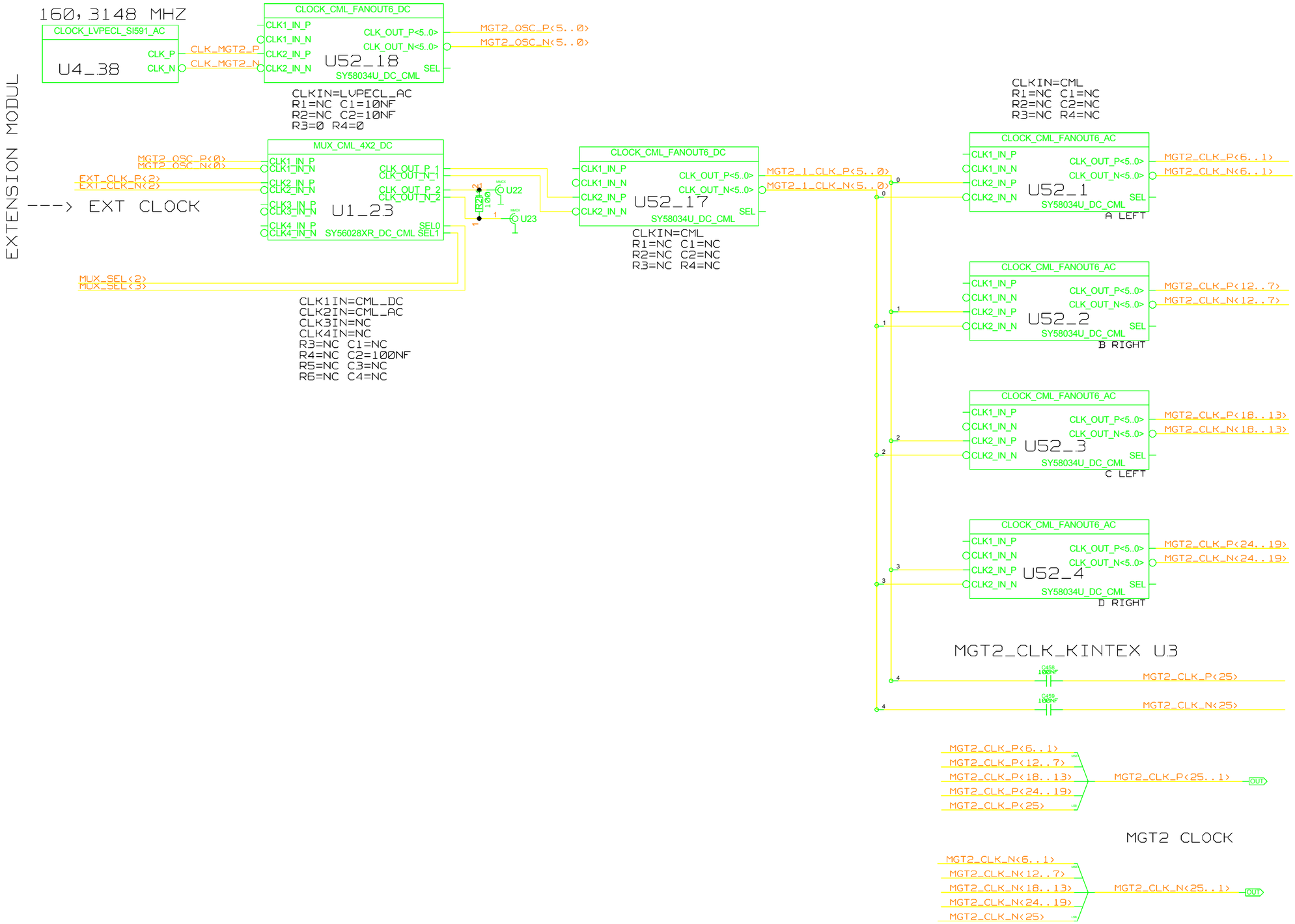

UPDATE PICK & PLACE DATA FOR FANOUT AND MUX

UNIVERSITY OF MAINZ	DRAWING TITLE: MGT2 CLOCK CML		
BLOCK: CLOCK	SIZE: C	REV. 27.05.2014	DRAWING NO.
	SCALE		SHEET OF

REVISIONS				
ZONE	LTR	DESCRIPTION	DATE	APPR.

MGT3 CLOCK

EXTENSION MODUL

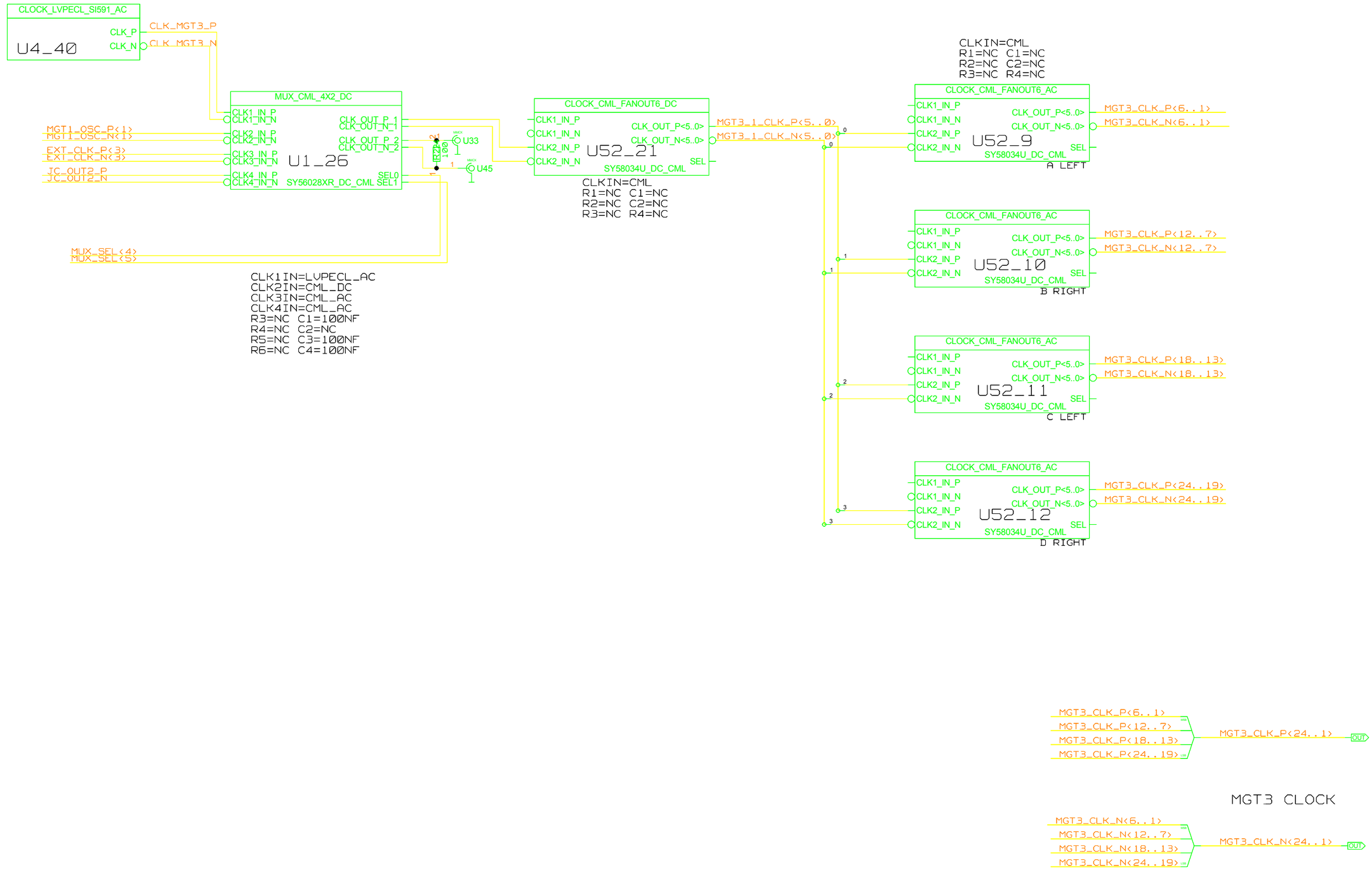

UPDATE PICK & PLACE DATA FOR FANOUT AND MUX

UNIVERSITY OF MAINZ	DRAWING TITLE: MGT3 CLOCK CML		
BLOCK: CLOCK	SIZE: C	REV. 27.05.2014	DRAWING NO.
	SCALE		SHEET OF

REVISIONS				
ZONE	LTR	DESCRIPTION	DATE	APPR.

MGT4 CLOCK

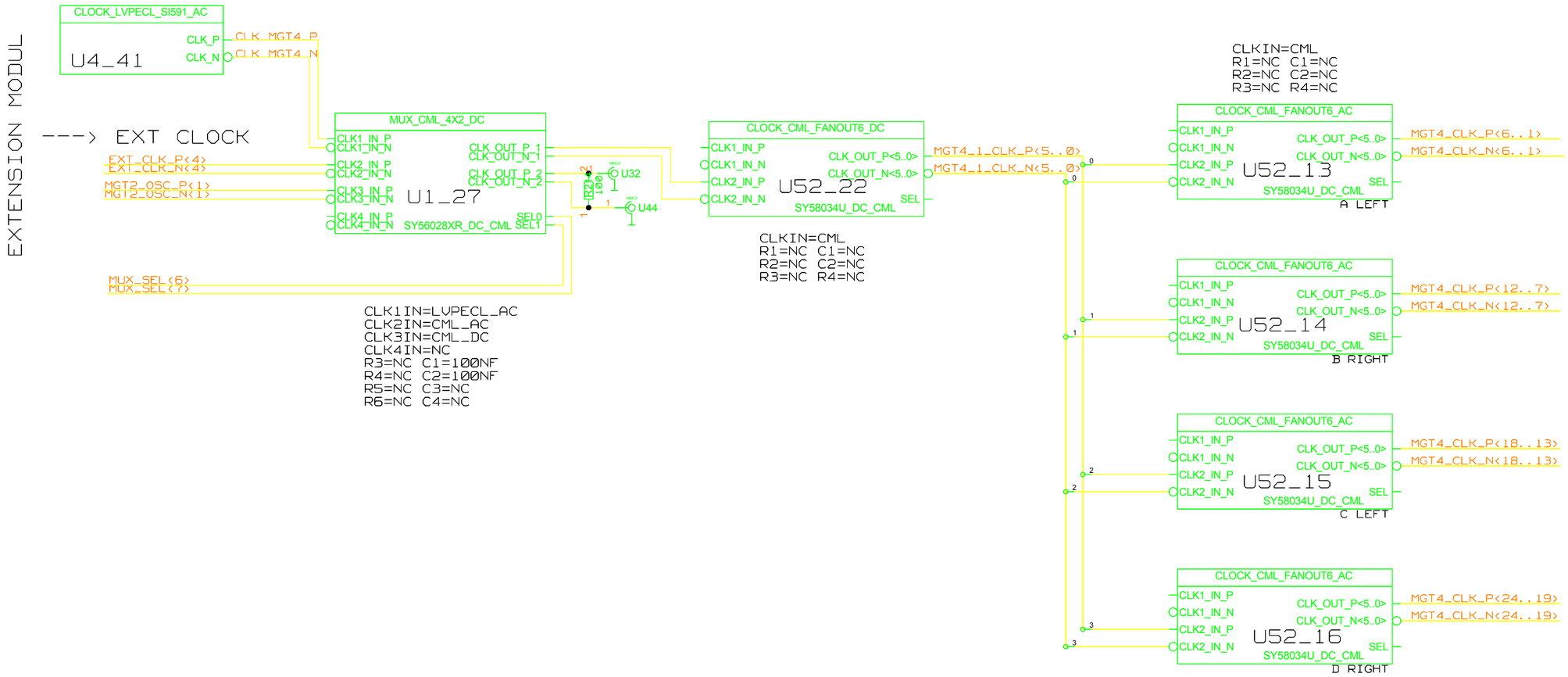

UPDATE PICK & PLACE DATA FOR FANOUT AND MUX

UNIVERSITY OF MAINZ	DRAWING TITLE: MGT4 CLOCK CML		
BLOCK: CLOCK	SIZE: C	REV. 27.05.2014	DRAWING NO.
	SCALE		SHEET OF

REVISIONS				
ZONE	LTR	DESCRIPTION	DATE	APPR.

GCK1 + GCK2 CLOCK

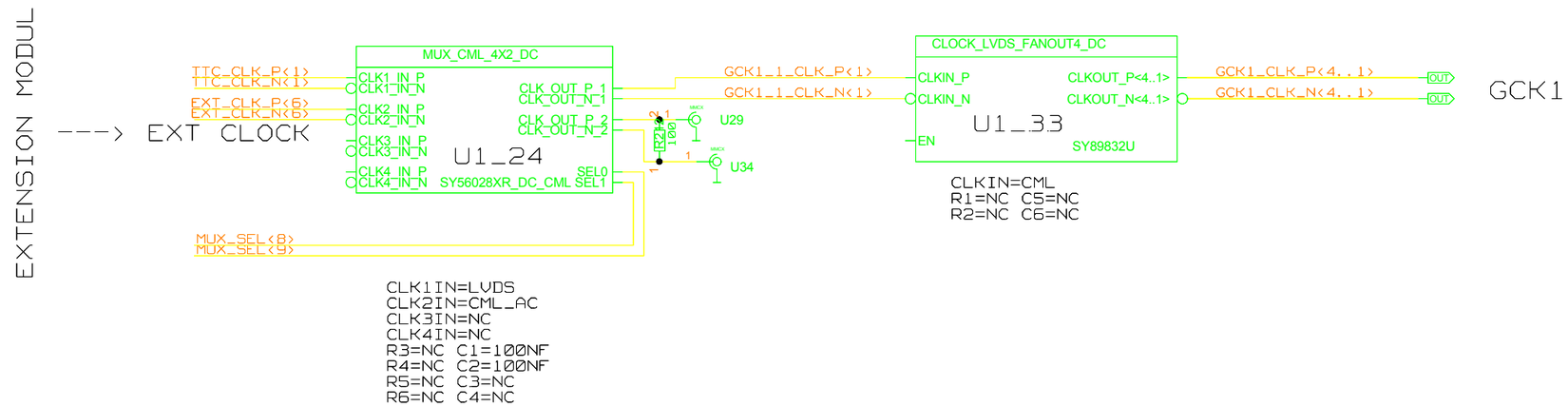

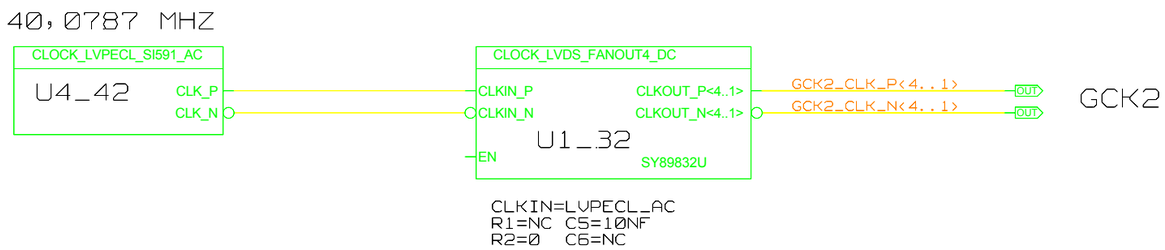

UPDATE PICK & PLACE DATA FOR FANOUT AND MUX

UNIVERSITY OF MAINZ	DRAWING TITLE: GCK1+2 CLOCK LVDS		
BLOCK: CLOCK	SIZE: C	REV.: 27.05.2014	DRAWING NO.
	SCALE		SHEET OF

REVISIONS				
ZONE	LTR	DESCRIPTION	DATE	APPR.

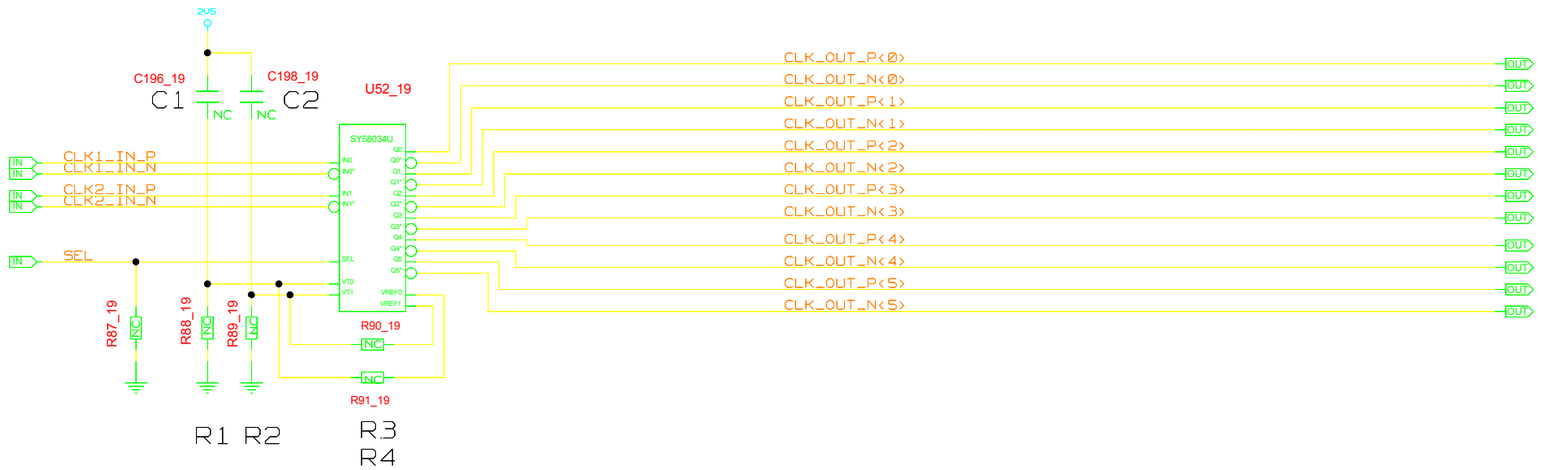

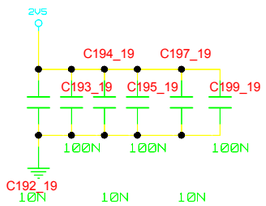

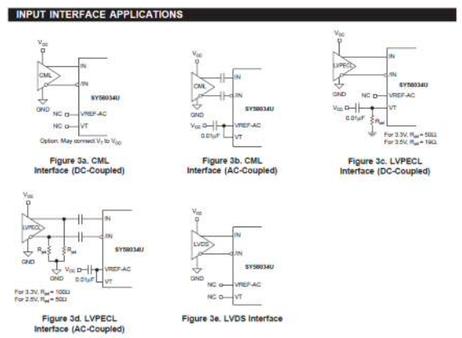

UNIVERSITY OF MAINZ

BLOCK: CLOCK

DRAWING TITLE

CLOCK_CML_FANOUT6_DC

SIZE C | REV. | DRAWING NO.

SCALE | SHEET OF

REVISIONS				
ZONE	LTR	DESCRIPTION	DATE	APPR.

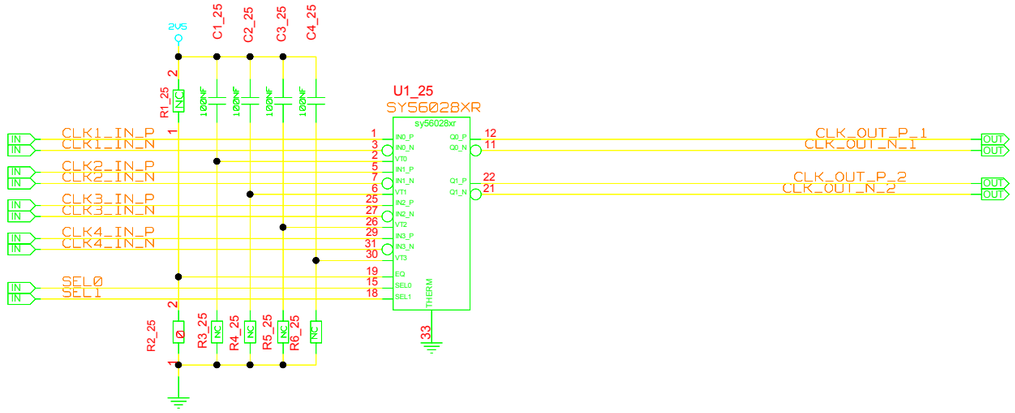

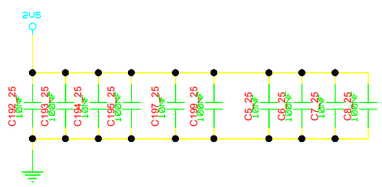

Input Interface Applications

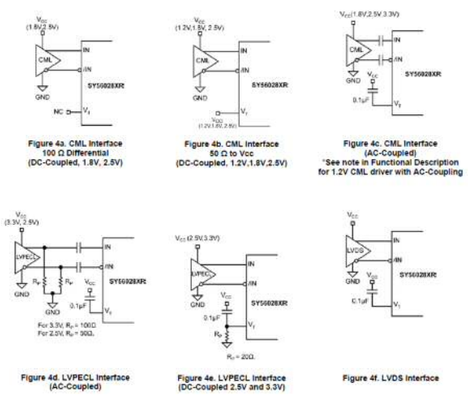

UNIVERSITY OF MAINZ	DRAWING TITLE: MULTIPLEXER		
BLOCK: CLOCK	SIZE: C	REV.	DRAWING NO.
	SCALE		SHEET OF

REVISIONS				
ZONE	LTR	DESCRIPTION	DATE	APPR.

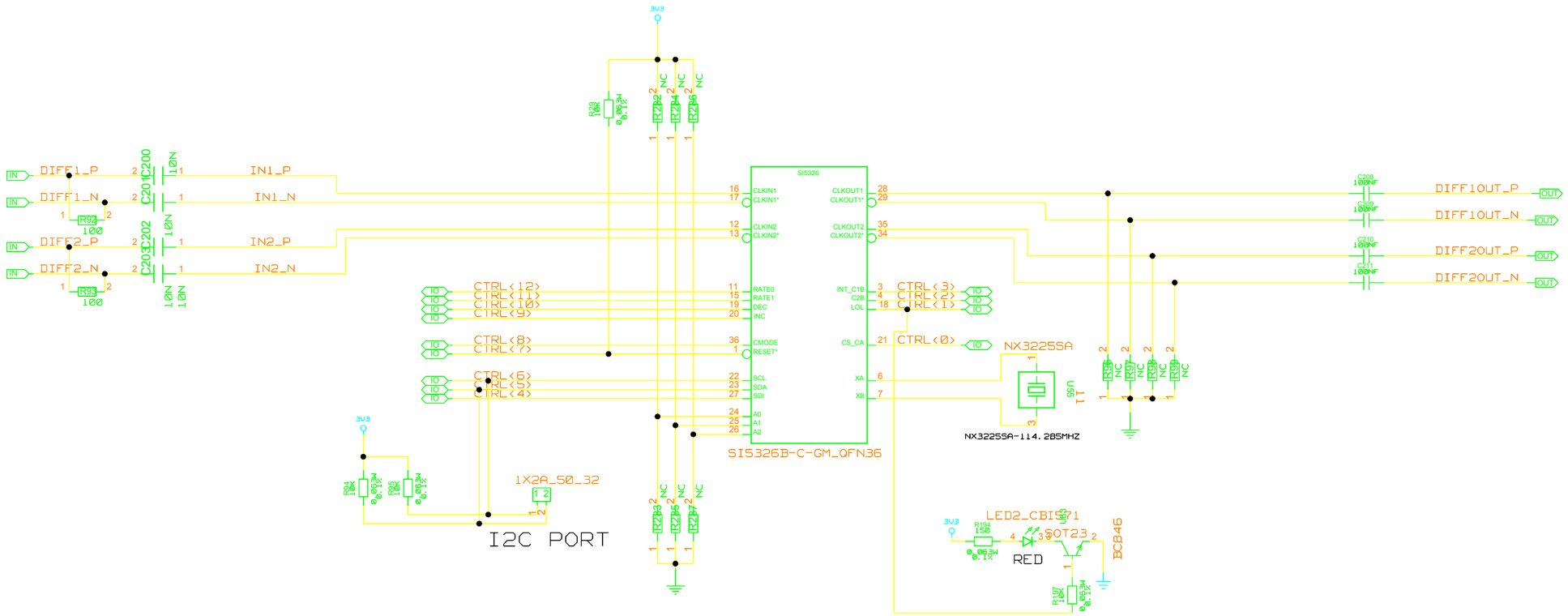

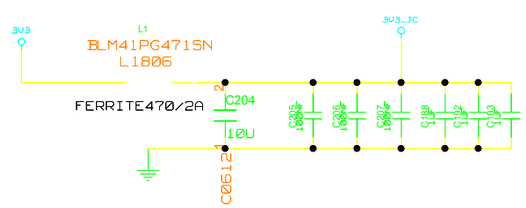

UNIVERSITY OF MAINZ

DRAWING TITLE

JITTERCLEANER_SI5326

SIZE	REV.	DRAWING NO.
C		

SCALE | SHEET OF

REVISIONS				
ZONE	LTR	DESCRIPTION	DATE	APPR.

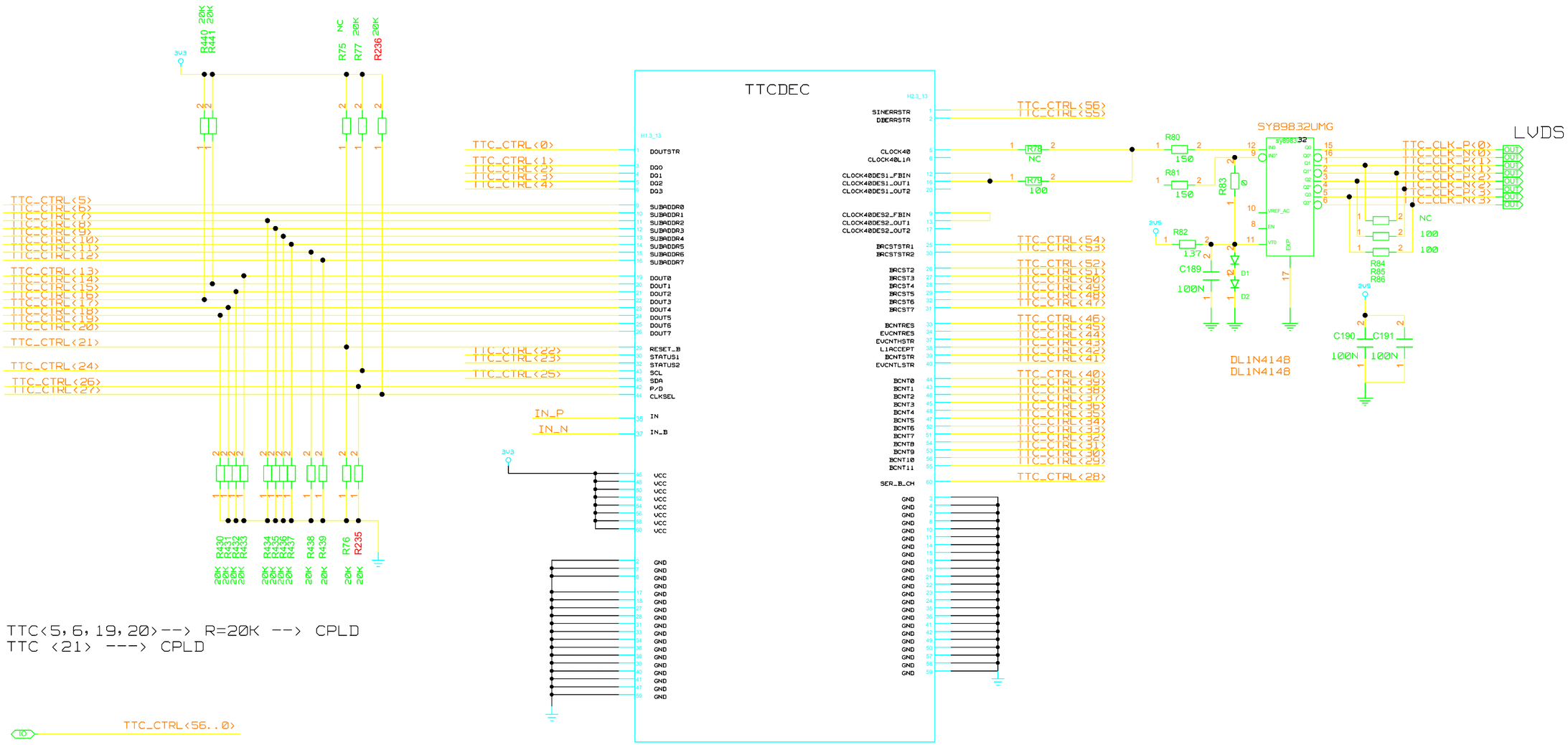

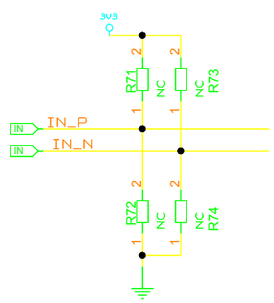

UNIVERSITY OF MAINZ	30.05.2014 U. SCHAEFFER
	DRAWING TITLE: TTC
	SIZE: C · REV.: 30.05.2014 · DRAWING NO.
	SCALE · SHEET OF

REVISIONS				
ZONE	LTR	DESCRIPTION	DATE	APPR.

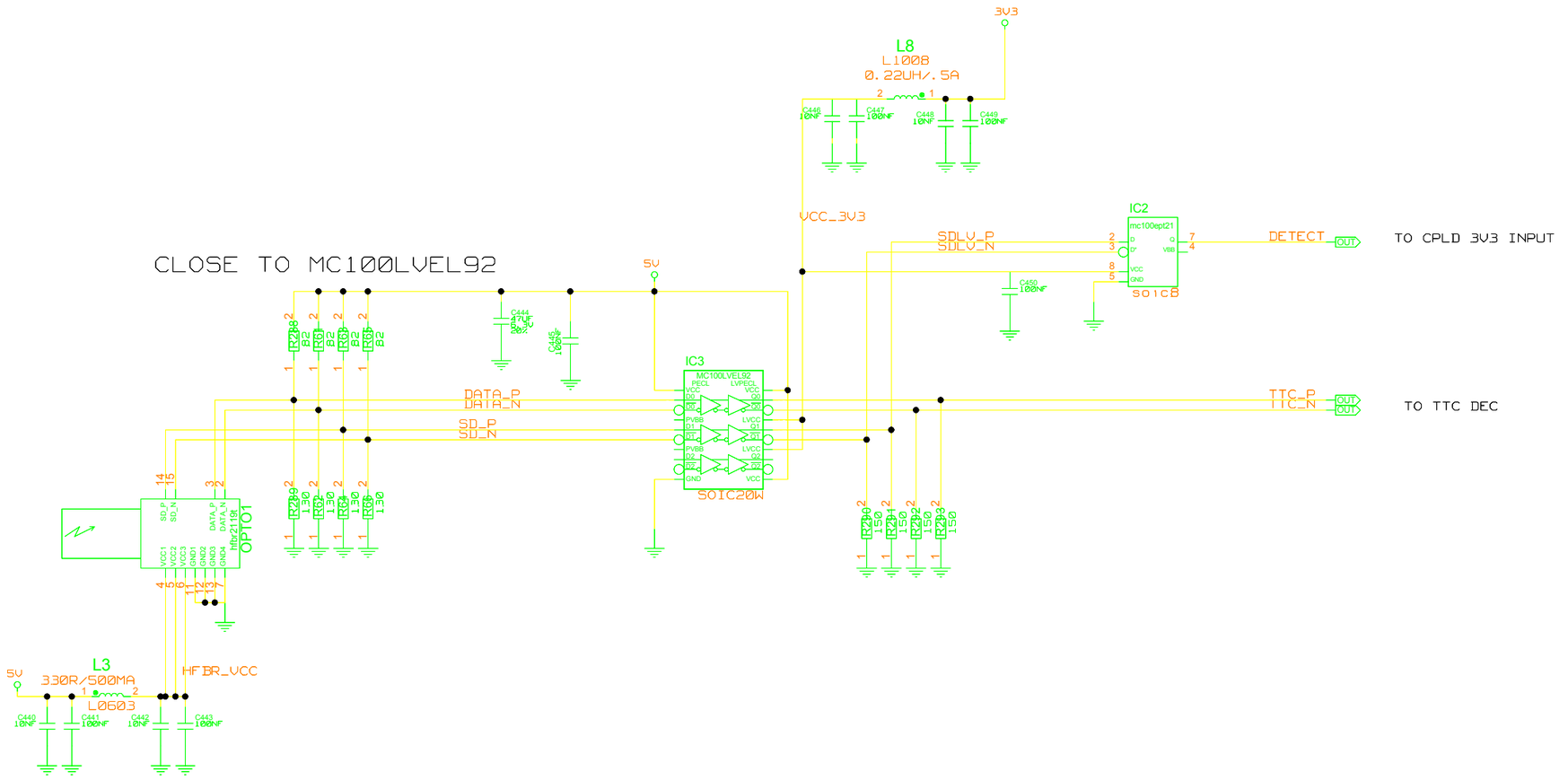

UNIVERSITY OF MAINZ

BLOCK: CLOCK

DRAWING TITLE: TTC OPTO IN

SIZE: C | REV. | DRAWING NO.

SCALE | SHEET OF

REVISIONS				
ZONE	LTR	DESCRIPTION	DATE	APPR.

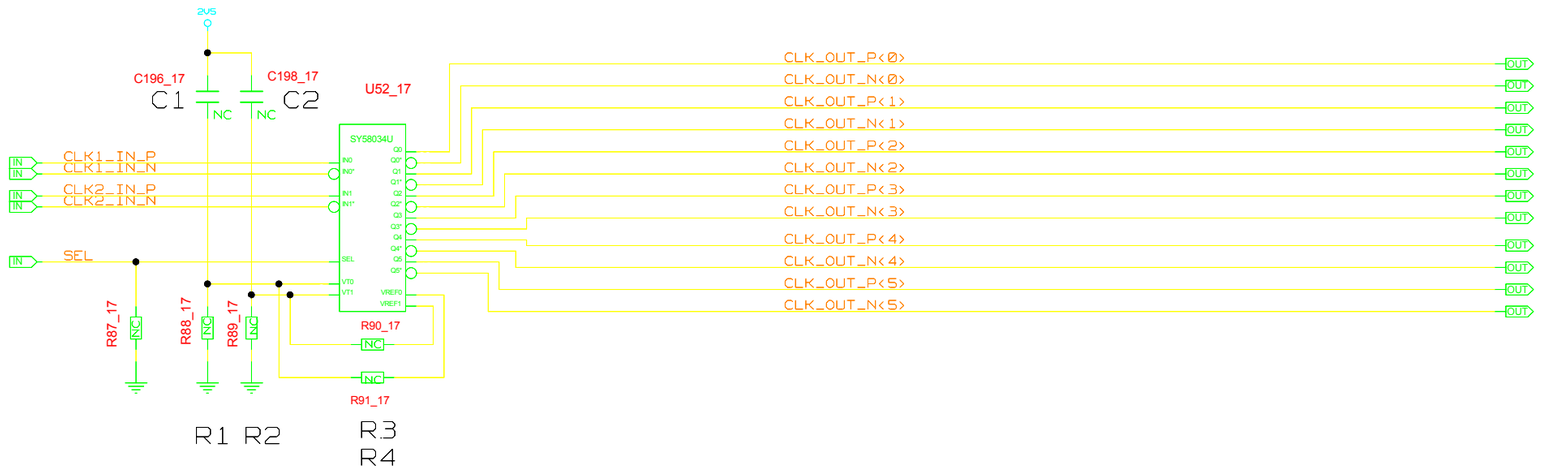

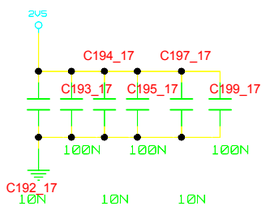

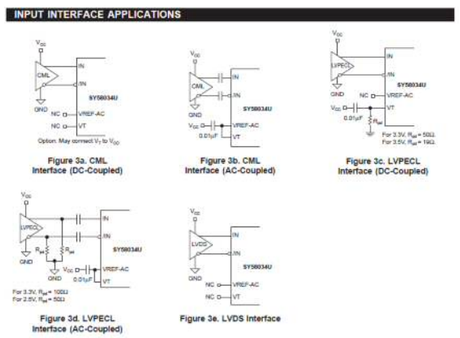

UNIVERSITY OF MAINZ

BLOCK: CLOCK

DRAWING TITLE

CLOCK_CML_FANOUT6_DC

SIZE	REV.	DRAWING NO.
C		

SCALE | SHEET OF

REVISIONS				
ZONE	LTR	DESCRIPTION	DATE	APPR.

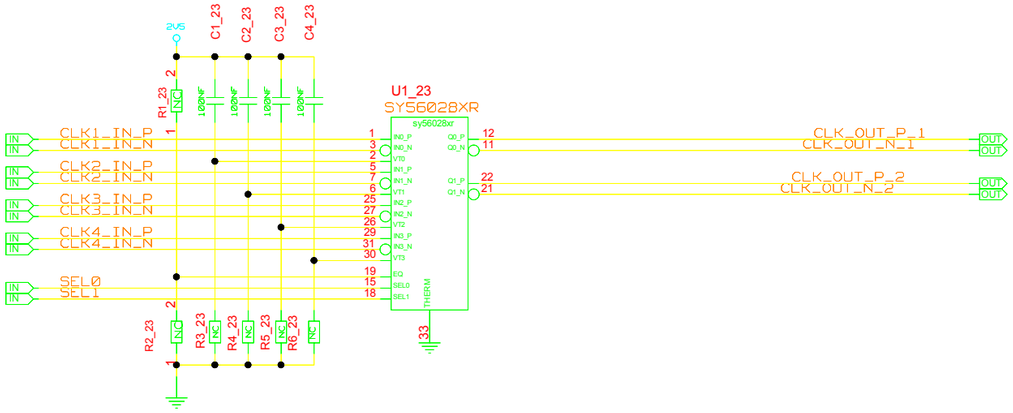

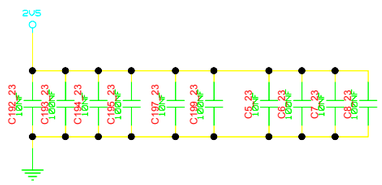

Input Interface Applications

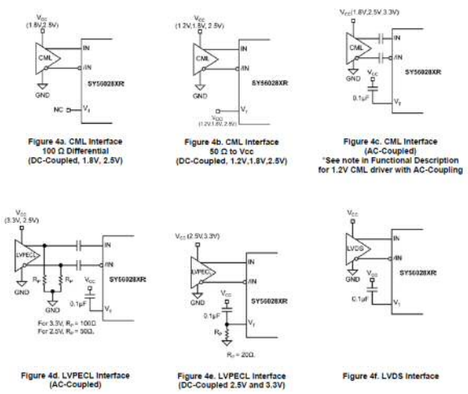

Figure 4a. CML Interface
100 Ω Differential
(DC-Coupled, 1.8V, 2.5V)

Figure 4b. CML Interface
50 Ω to Vcc
(DC-Coupled, 1.2V,1.8V,2.5V)

Figure 4c. CML Interface
(AC-Coupled)
*See note in Functional Description
for 1.2V CML driver with AC-Coupling

Figure 4d. LVPECL Interface
(AC-Coupled)

Figure 4e. LVPECL Interface
(DC-Coupled 2.5V and 3.3V)

Figure 4f. LVDS Interface

UNIVERSITY OF MAINZ	DRAWING TITLE: MULTIPLEXER		
BLOCK: CLOCK	SIZE: C	REV.	DRAWING NO.
	SCALE		SHEET OF

REVISIONS				
ZONE	LTR	DESCRIPTION	DATE	APPR.

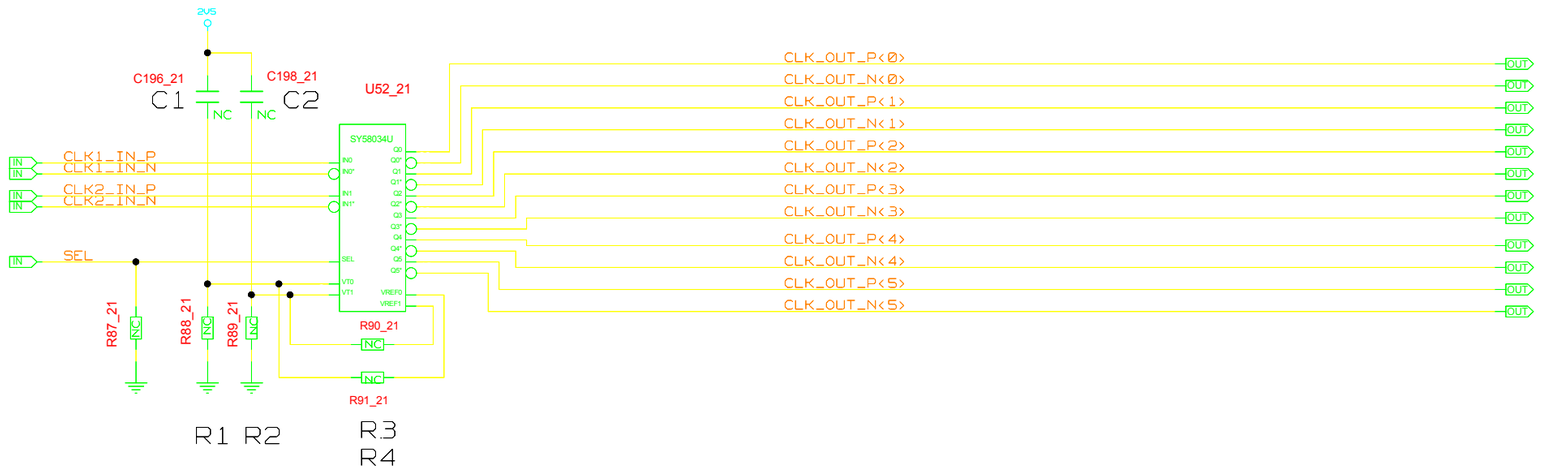

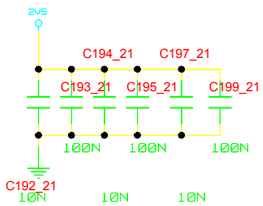

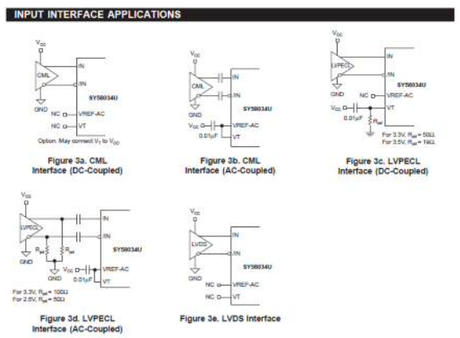

UNIVERSITY OF MAINZ

BLOCK: CLOCK

DRAWING TITLE

CLOCK_CML_FANOUT6_DC

SIZE C | REV. | DRAWING NO.

SCALE | SHEET OF

REVISIONS				
ZONE	LTR	DESCRIPTION	DATE	APPR.

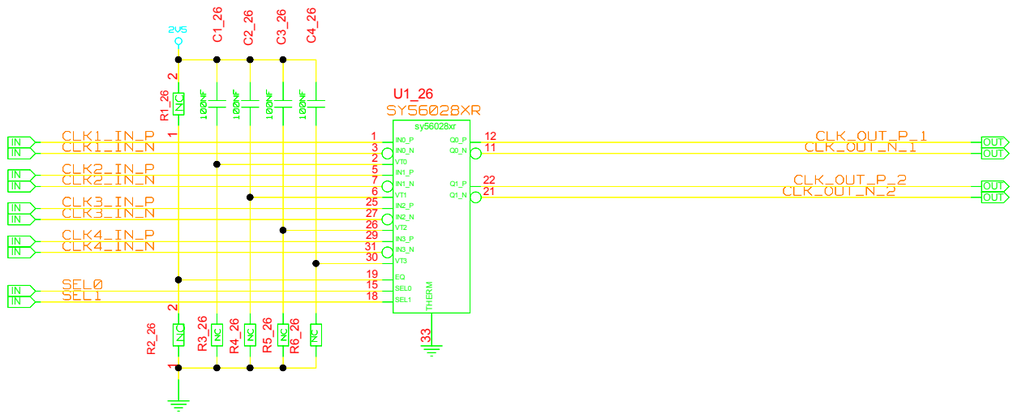

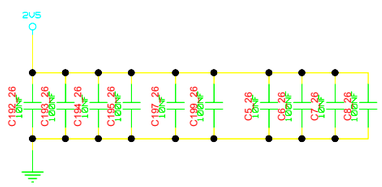

Input Interface Applications

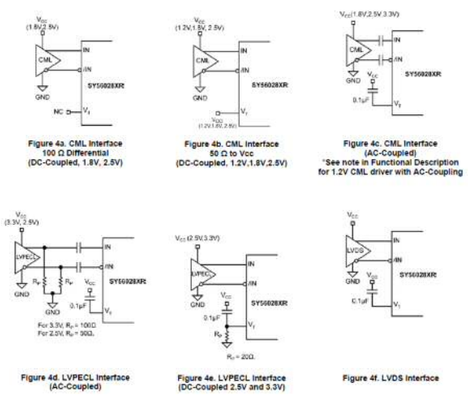

UNIVERSITY OF MAINZ	DRAWING TITLE MULTIPLEXER		
BLOCK: CLOCK	SIZE C	REV.	DRAWING NO.
	SCALE		SHEET OF

REVISIONS				
ZONE	LTR	DESCRIPTION	DATE	APPR.

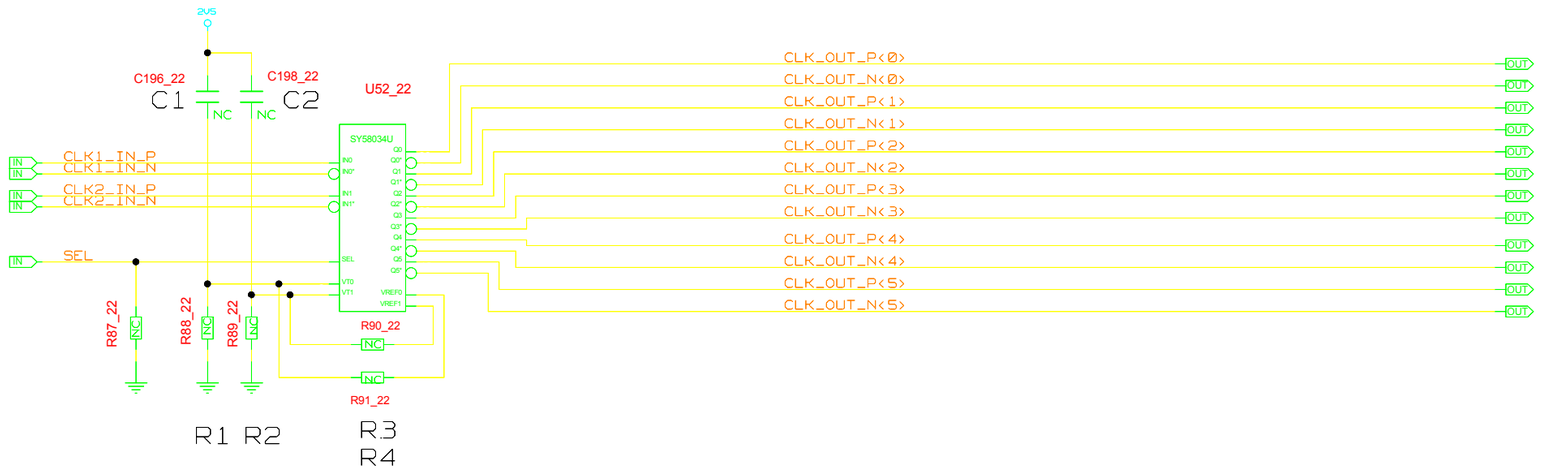

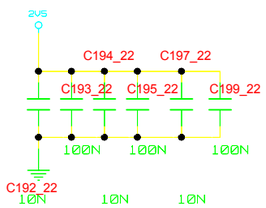

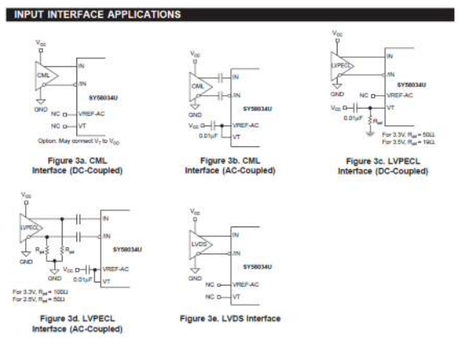

UNIVERSITY OF MAINZ

BLOCK: CLOCK

DRAWING TITLE

CLOCK_CML_FANOUT6_DC

SIZE C | REV. | DRAWING NO.

SCALE | SHEET OF

REVISIONS				
ZONE	LTR	DESCRIPTION	DATE	APPR.

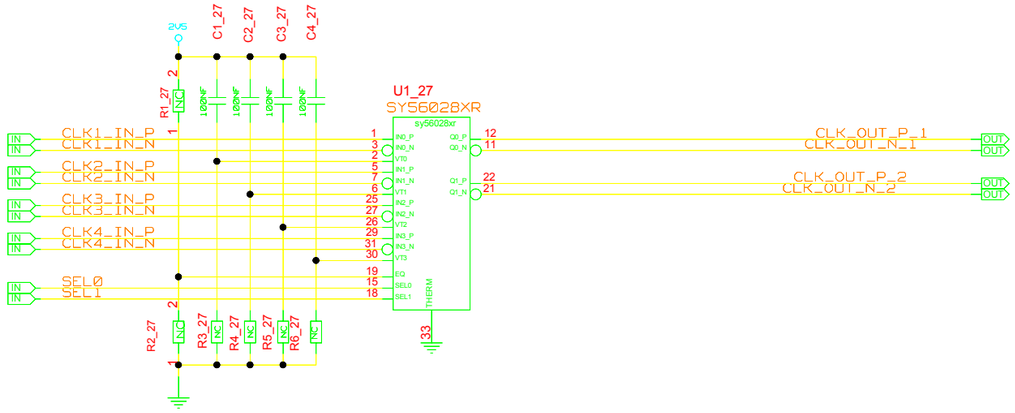

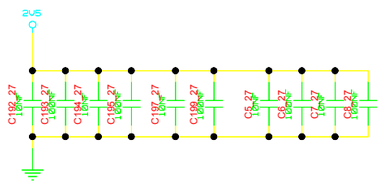

Input Interface Applications

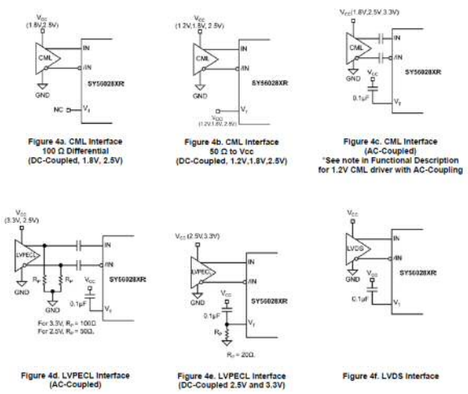

Figure 4a. CML Interface 100 Ω Differential (DC-Coupled, 1.8V, 2.5V)

Figure 4b. CML Interface 50 Ω to Vcc (DC-Coupled, 1.2V,1.8V,2.5V)

Figure 4c. CML Interface (AC-Coupled) *See note in Functional Description for 1.2V CML driver with AC-Coupling

Figure 4d. LVPECL Interface (AC-Coupled)

Figure 4e. LVPECL Interface (DC-Coupled 2.5V and 3.3V)

Figure 4f. LVDS Interface

UNIVERSITY OF MAINZ	DRAWING TITLE: MULTIPLEXER		
BLOCK: CLOCK	SIZE: C	REV.	DRAWING NO.
	SCALE		SHEET OF

REVISIONS				
ZONE	LTR	DESCRIPTION	DATE	APPR.

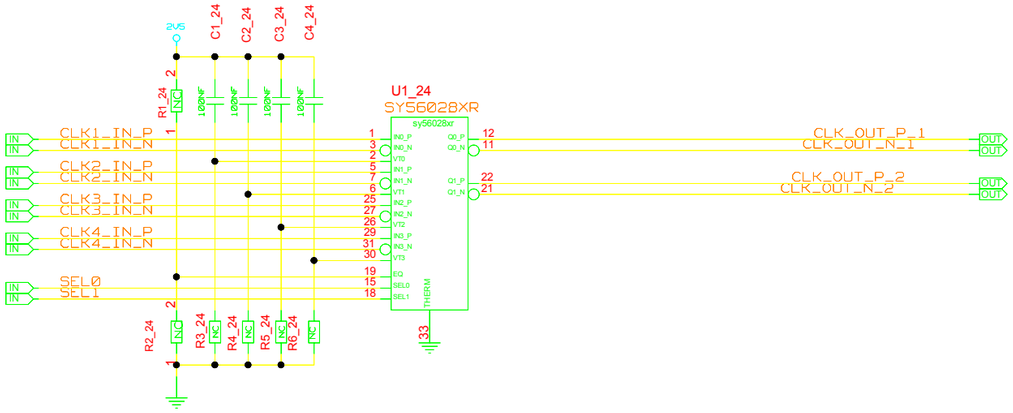

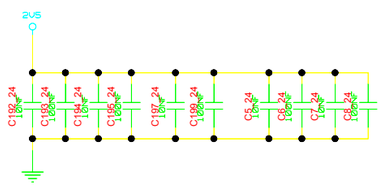

Input Interface Applications

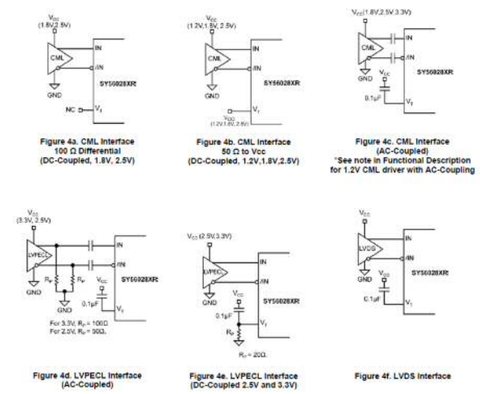

UNIVERSITY OF MAINZ	DRAWING TITLE MULTIPLEXER		
BLOCK: CLOCK	SIZE C	REV.	DRAWING NO.
	SCALE		SHEET OF

REVISIONS				
ZONE	LTR	DESCRIPTION	DATE	APPR.

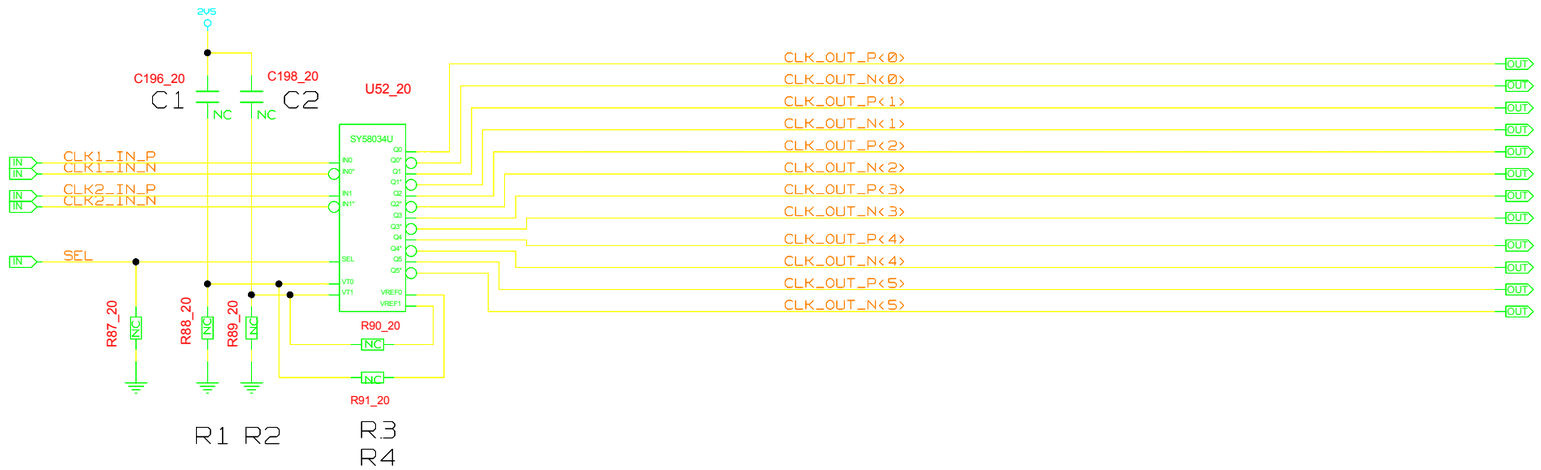

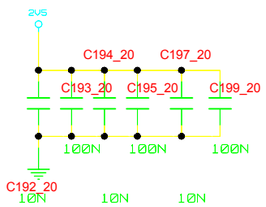

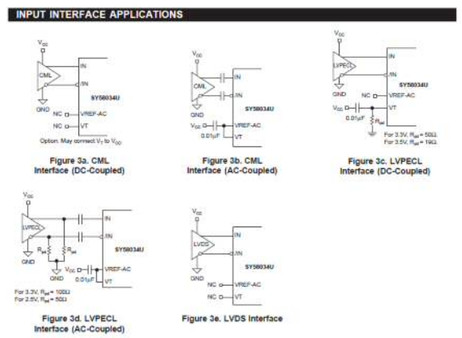

UNIVERSITY OF MAINZ

BLOCK: CLOCK

DRAWING TITLE

CLOCK_CML_FANOUT6_DC

SIZE C | REV. | DRAWING NO.

SCALE | SHEET OF

REVISIONS				
ZONE	LTR	DESCRIPTION	DATE	APPR.

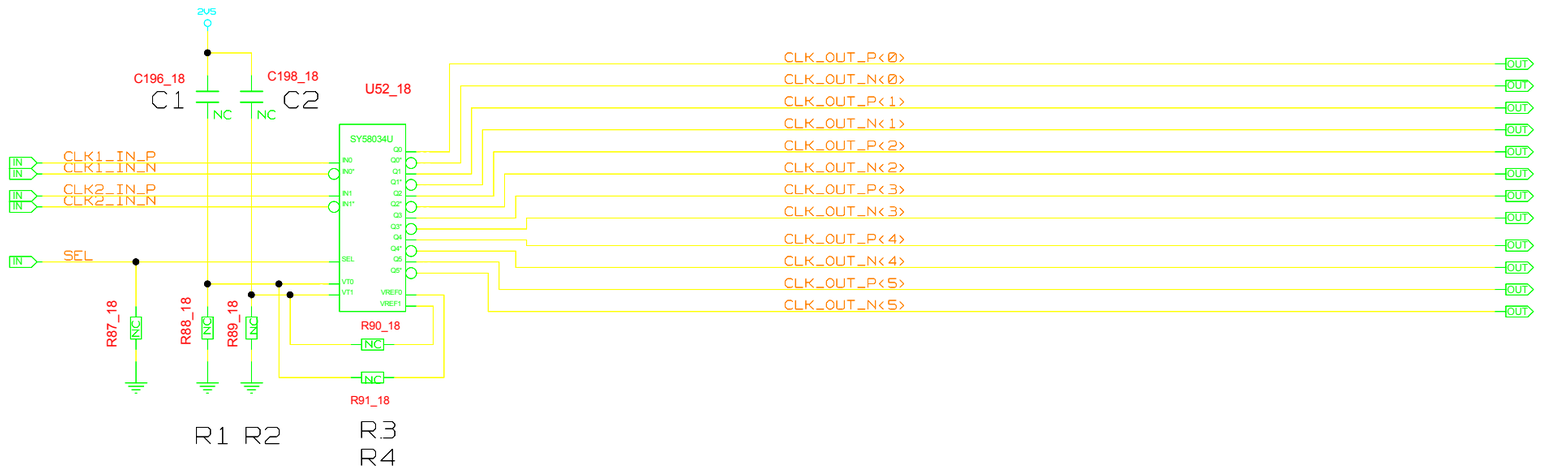

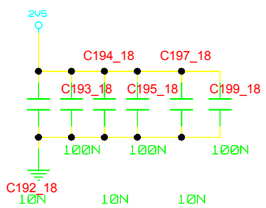

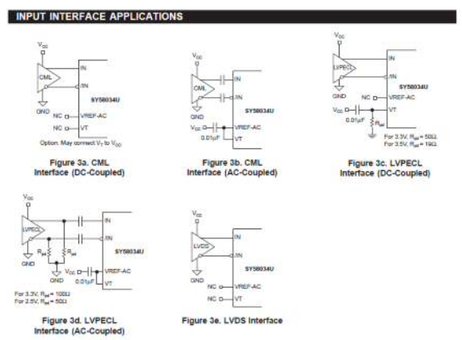

UNIVERSITY OF MAINZ

BLOCK: CLOCK

DRAWING TITLE

CLOCK_CML_FANOUT6_DC

SIZE	REV.	DRAWING NO.
C		

SCALE | SHEET OF

REVISIONS				
ZONE	LTR	DESCRIPTION	DATE	APPR.

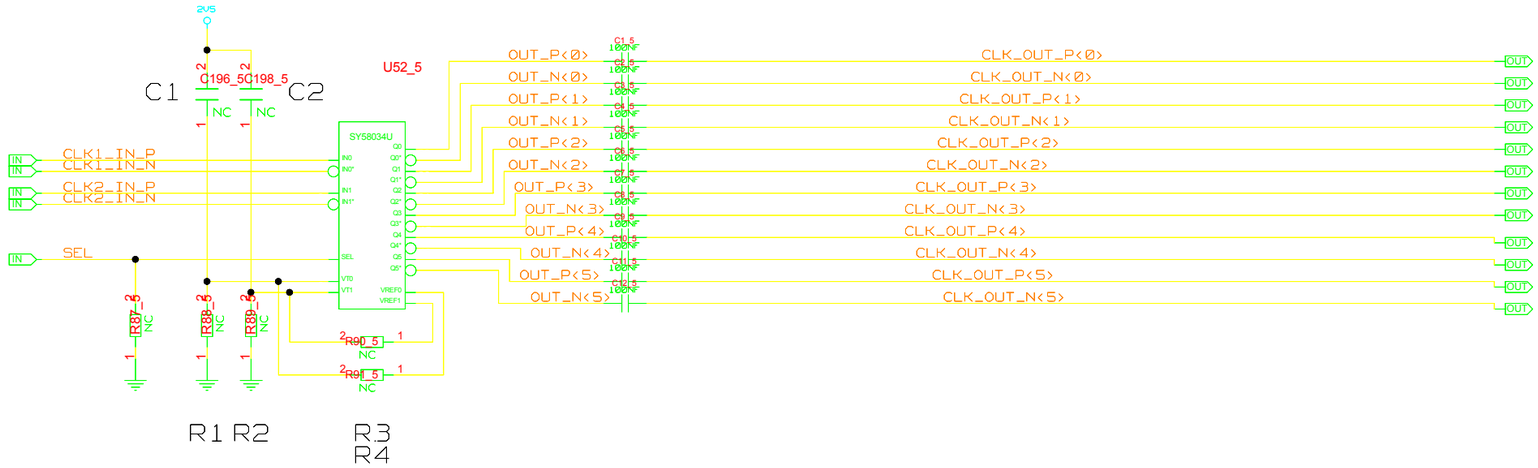

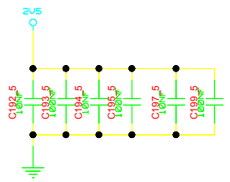

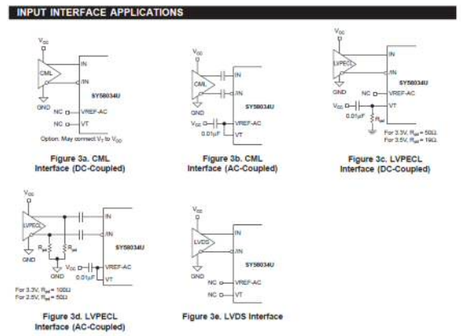

UNIVERSITY OF MAINZ	DRAWING TITLE: CLOCK CML FANOUT6 AC
BLOCK: CLOCK	SIZE: C · REV. · DRAWING NO.
	SCALE · SHEET OF

REVISIONS				
ZONE	LTR	DESCRIPTION	DATE	APPR.

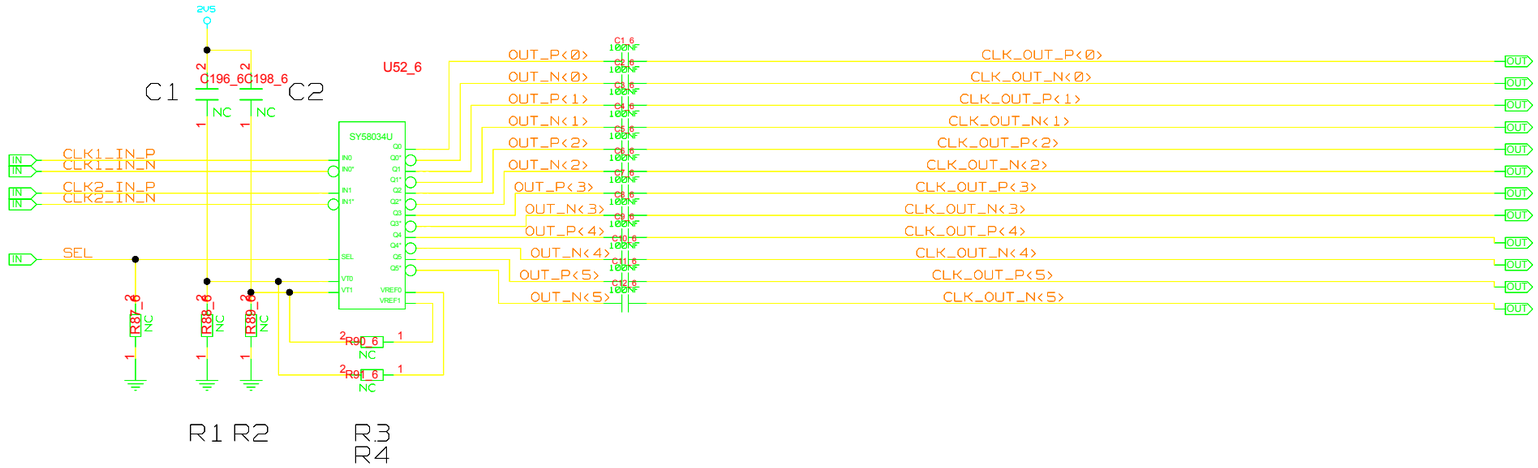

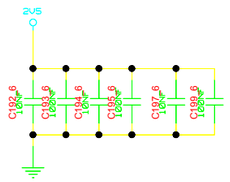

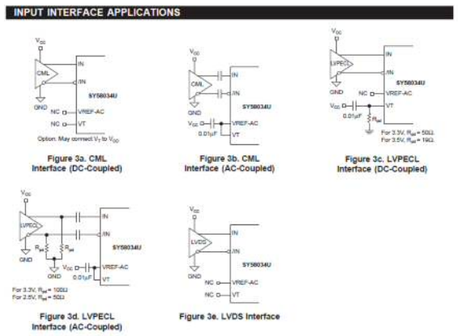

UNIVERSITY OF MAINZ	DRAWING TITLE: CLOCK CML FANOUT6 AC
BLOCK: CLOCK	SIZE: C · REV. · DRAWING NO.
	SCALE · SHEET OF

REVISIONS				
ZONE	LTR	DESCRIPTION	DATE	APPR.

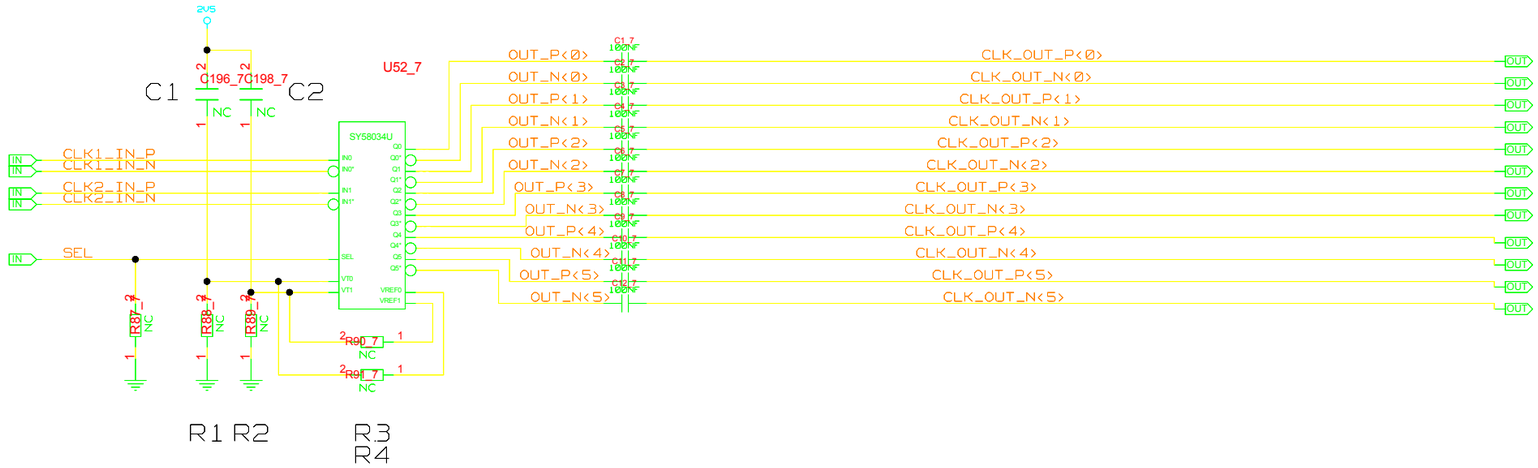

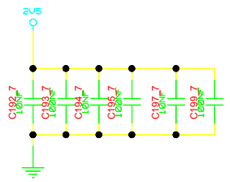

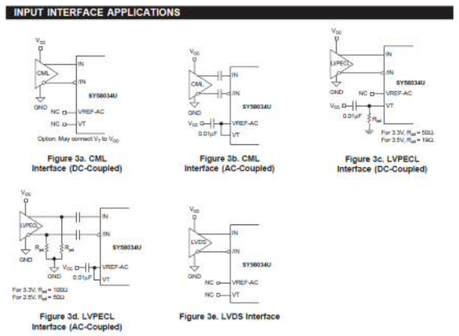

UNIVERSITY OF MAINZ	DRAWING TITLE: CLOCK CML FANOUT6 AC
BLOCK: CLOCK	SIZE: C · REV. · DRAWING NO.
	SCALE · SHEET OF

REVISIONS				
ZONE	LTR	DESCRIPTION	DATE	APPR.

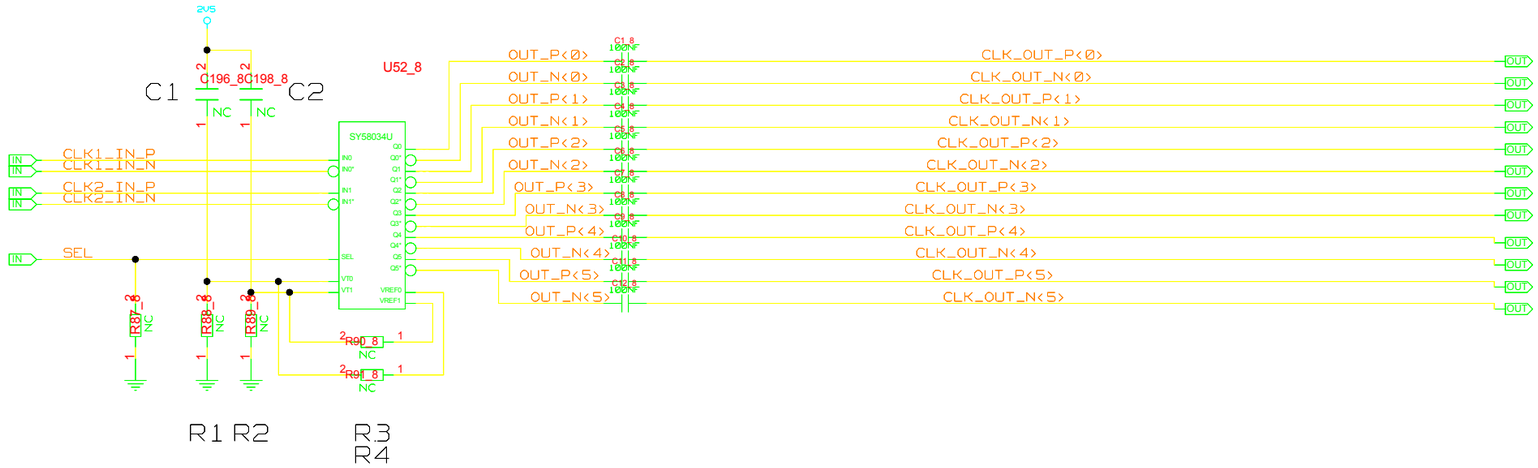

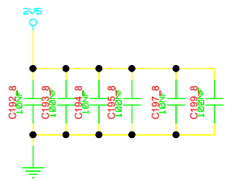

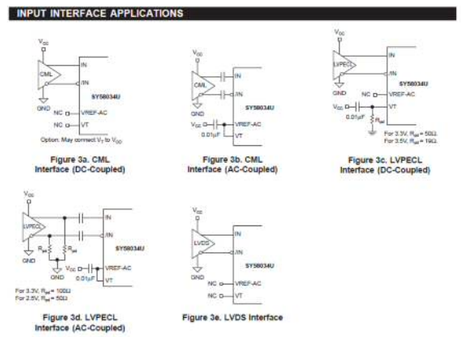

UNIVERSITY OF MAINZ	DRAWING TITLE: CLOCK CML FANOUT6 AC
BLOCK: CLOCK	SIZE: C · REV. · DRAWING NO.
	SCALE · SHEET OF

REVISIONS				
ZONE	LTR	DESCRIPTION	DATE	APPR.

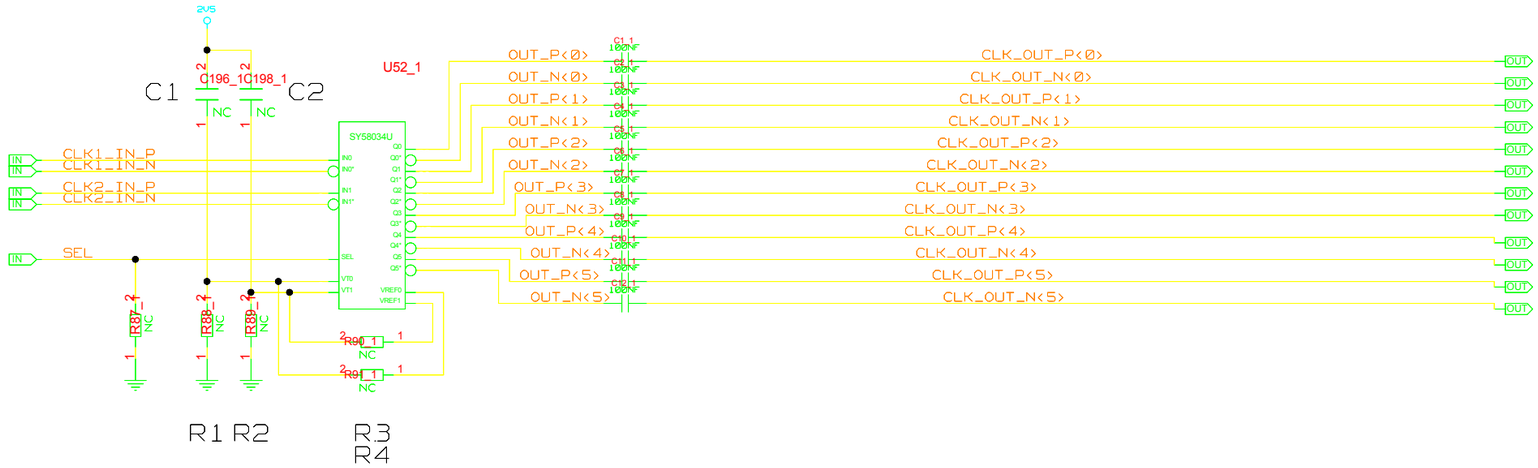

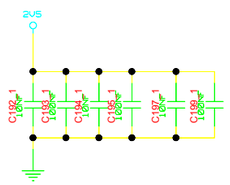

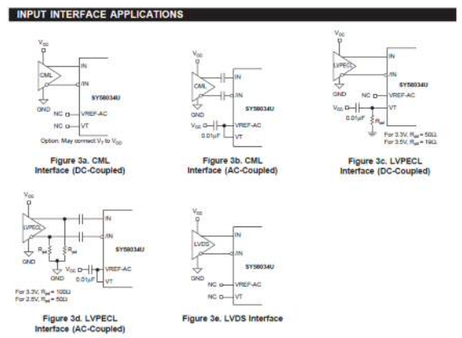

UNIVERSITY OF MAINZ	DRAWING TITLE: CLOCK CML FANOUT6 AC
BLOCK: CLOCK	SIZE: C · REV. · DRAWING NO.
	SCALE · SHEET OF

REVISIONS				
ZONE	LTR	DESCRIPTION	DATE	APPR.

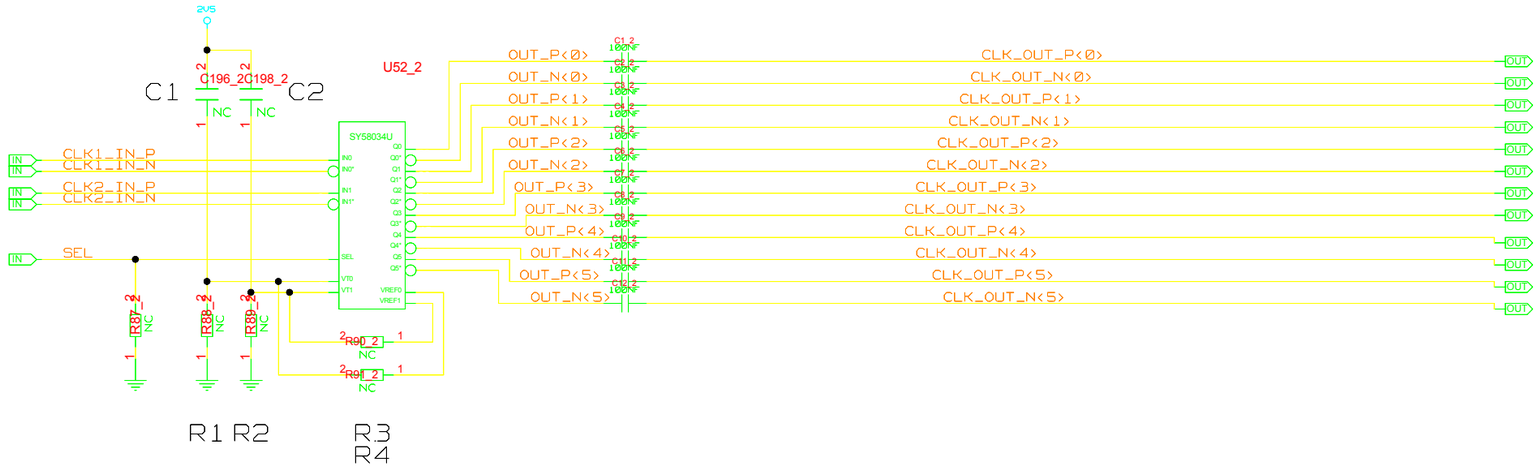

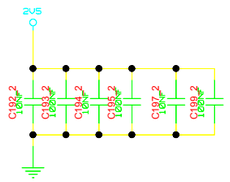

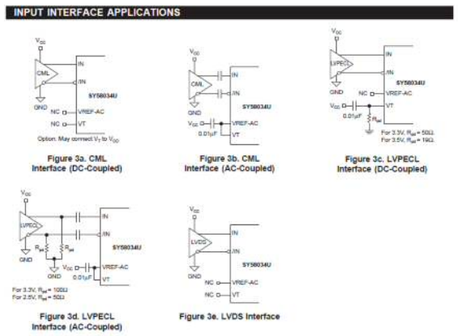

UNIVERSITY OF MAINZ	DRAWING TITLE: CLOCK CML FANOUT6 AC
BLOCK: CLOCK	SIZE: C · REV. · DRAWING NO.
	SCALE · SHEET OF

REVISIONS				
ZONE	LTR	DESCRIPTION	DATE	APPR.

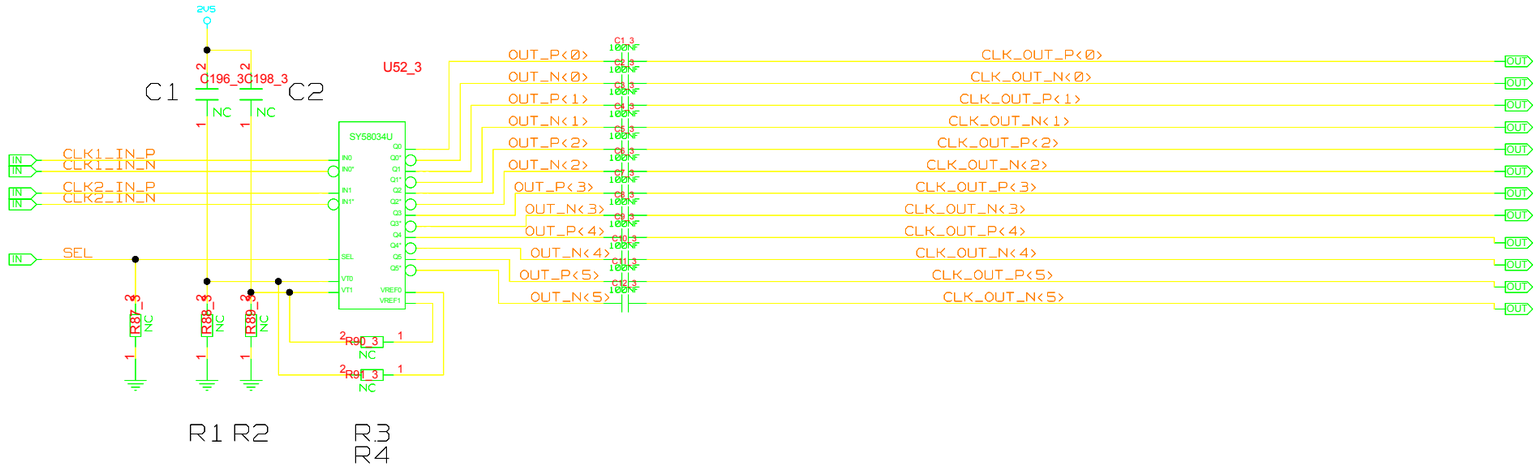

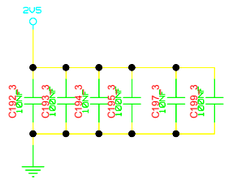

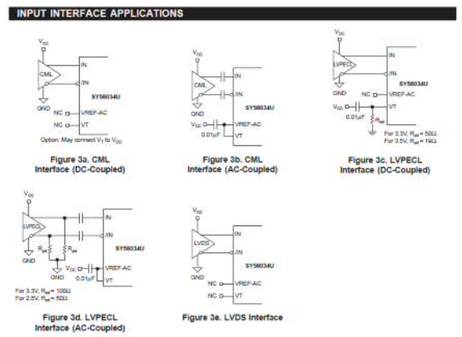

UNIVERSITY OF MAINZ

BLOCK: CLOCK

DRAWING TITLE: CLOCK CML FANOUT6 AC

SIZE: C | REV. | DRAWING NO.

SCALE | SHEET OF

REVISIONS				
ZONE	LTR	DESCRIPTION	DATE	APPR.

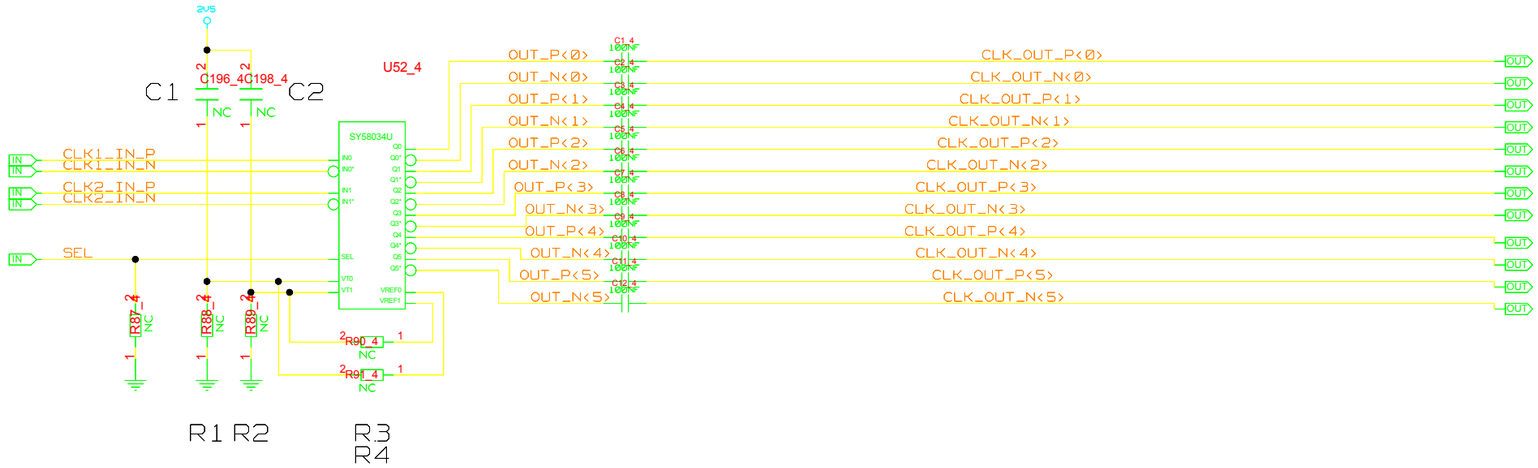

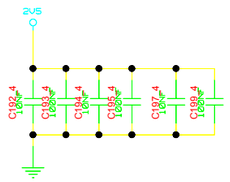

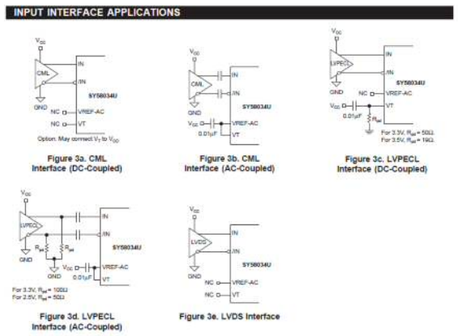

UNIVERSITY OF MAINZ	DRAWING TITLE: CLOCK CML FANOUT6 AC
BLOCK: CLOCK	SIZE: C / REV. / DRAWING NO.
	SCALE / SHEET OF

REVISIONS				
ZONE	LTR	DESCRIPTION	DATE	APPR.

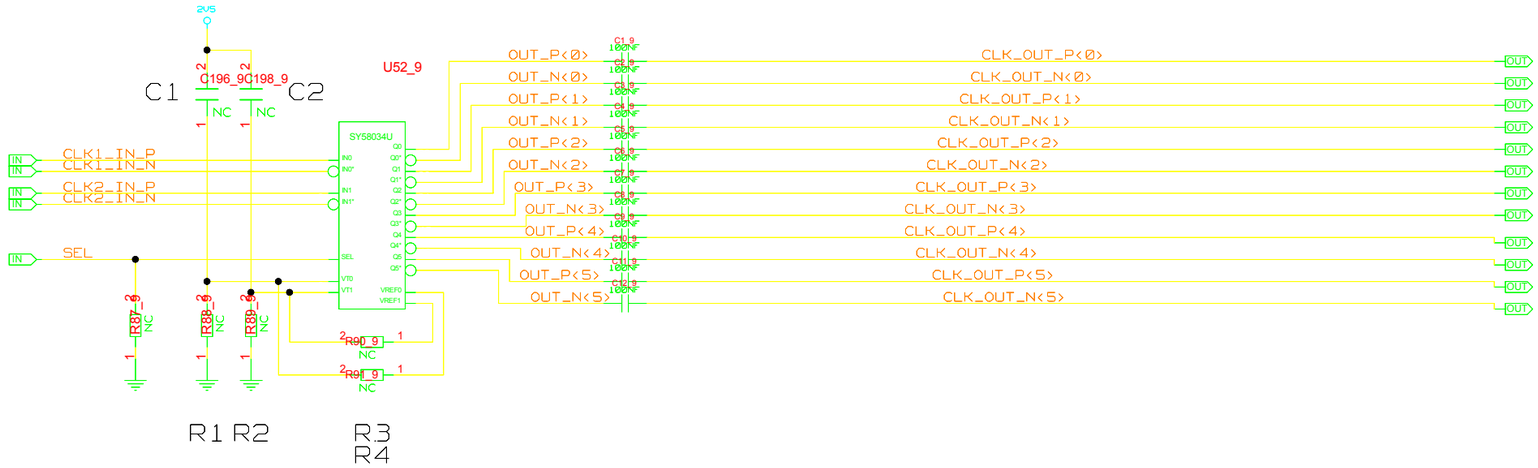

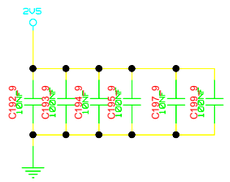

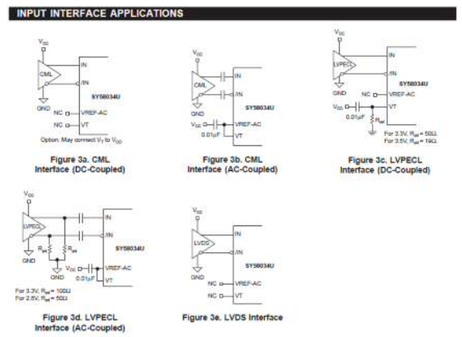

UNIVERSITY OF MAINZ	DRAWING TITLE: CLOCK CML FANOUT6 AC
BLOCK: CLOCK	SIZE: C / REV. / DRAWING NO.
	SCALE / SHEET OF

REVISIONS				
ZONE	LTR	DESCRIPTION	DATE	APPR.

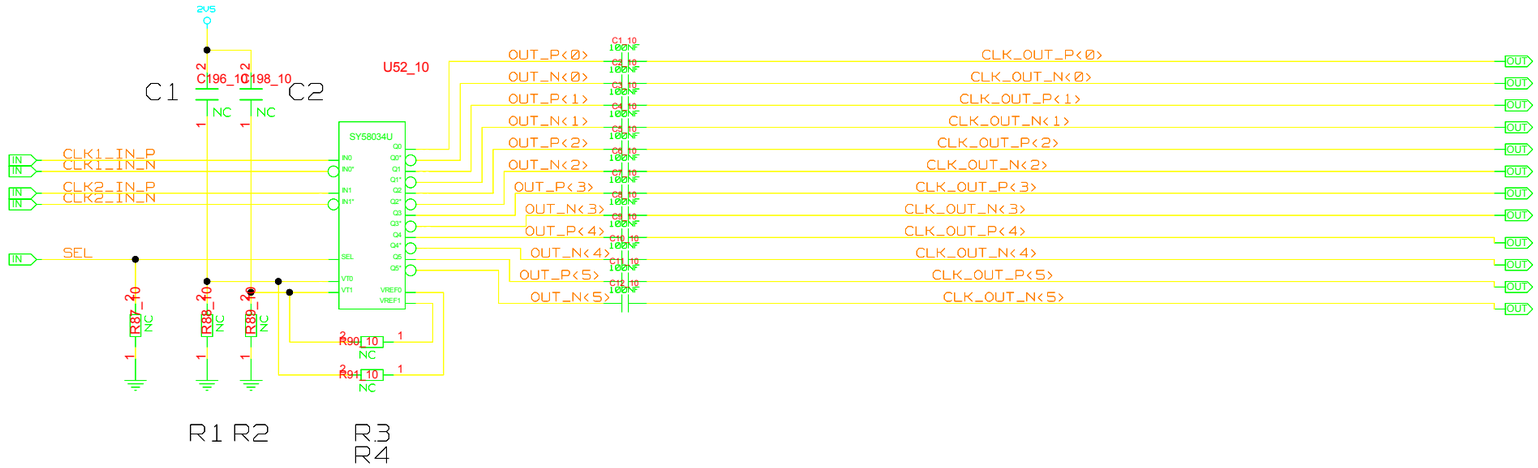

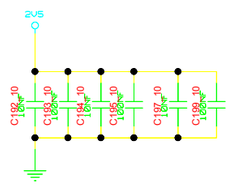

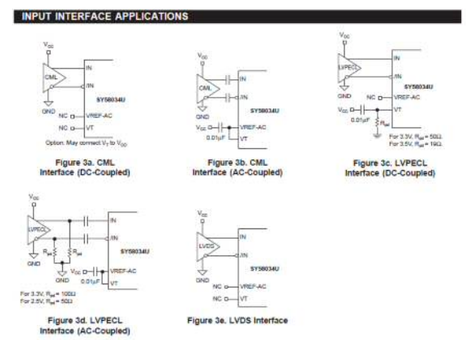

UNIVERSITY OF MAINZ

BLOCK: CLOCK

DRAWING TITLE: CLOCK CML FANOUT6 AC

SIZE: C | REV. | DRAWING NO.

SCALE | SHEET OF

REVISIONS				
ZONE	LTR	DESCRIPTION	DATE	APPR.

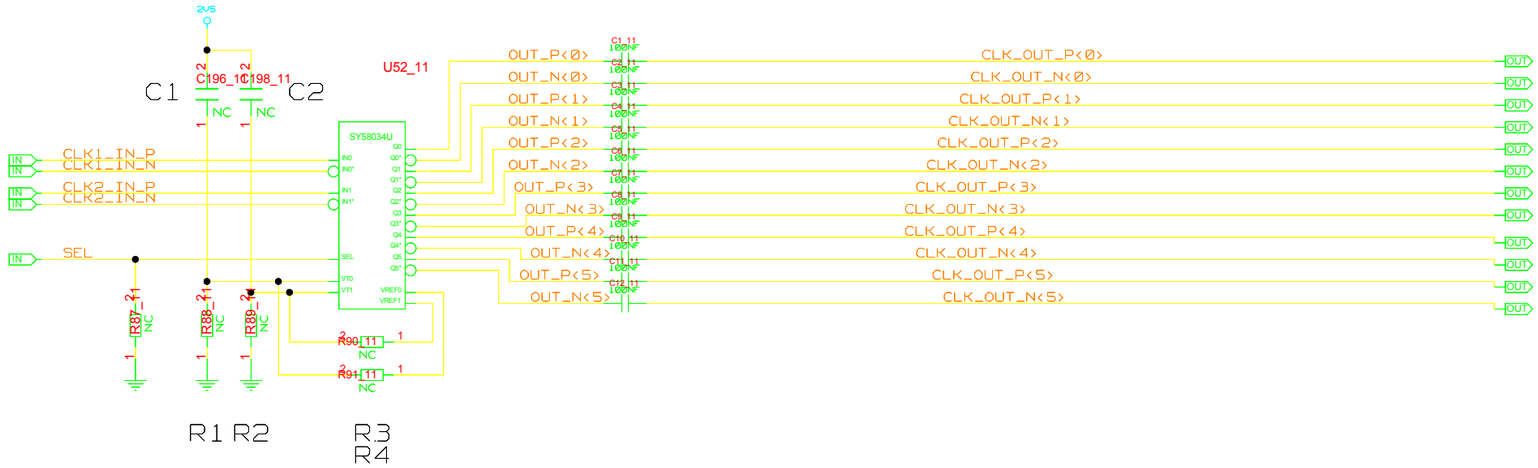

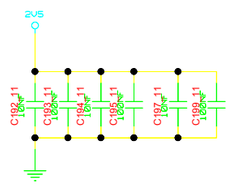

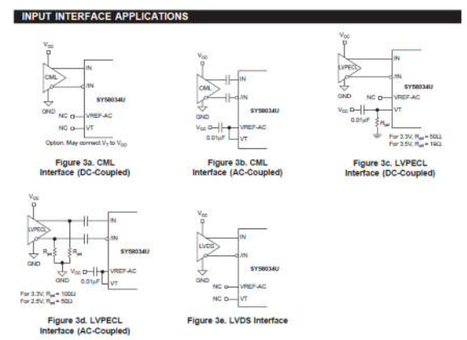

UNIVERSITY OF MAINZ	DRAWING TITLE: CLOCK CML FANOUT6 AC
BLOCK: CLOCK	SIZE: C · REV. · DRAWING NO.
	SCALE · SHEET OF

REVISIONS				
ZONE	LTR	DESCRIPTION	DATE	APPR.

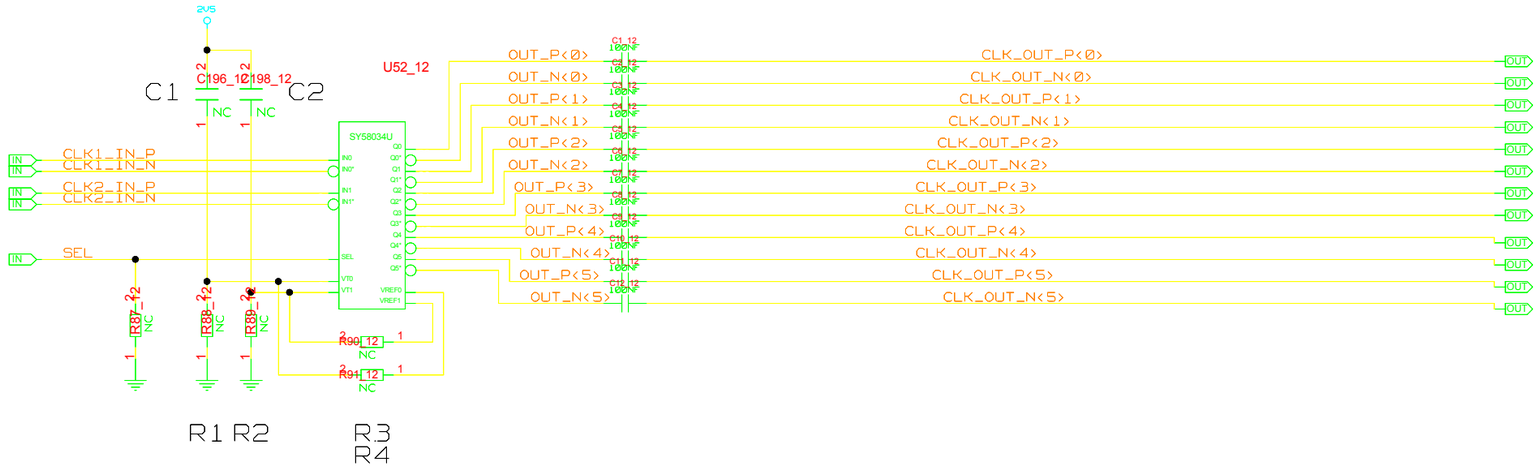

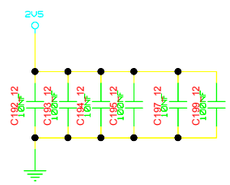

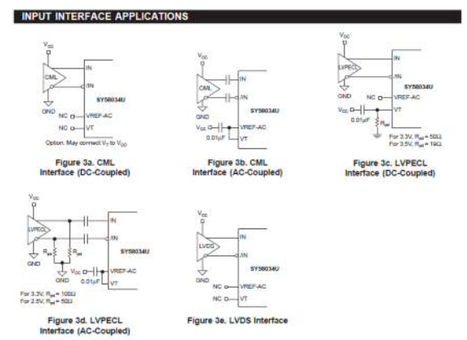

UNIVERSITY OF MAINZ

BLOCK: CLOCK

DRAWING TITLE: CLOCK CML FANOUT6 AC

SIZE: C | REV. | DRAWING NO.

SCALE | SHEET OF

REVISIONS				
ZONE	LTR	DESCRIPTION	DATE	APPR.

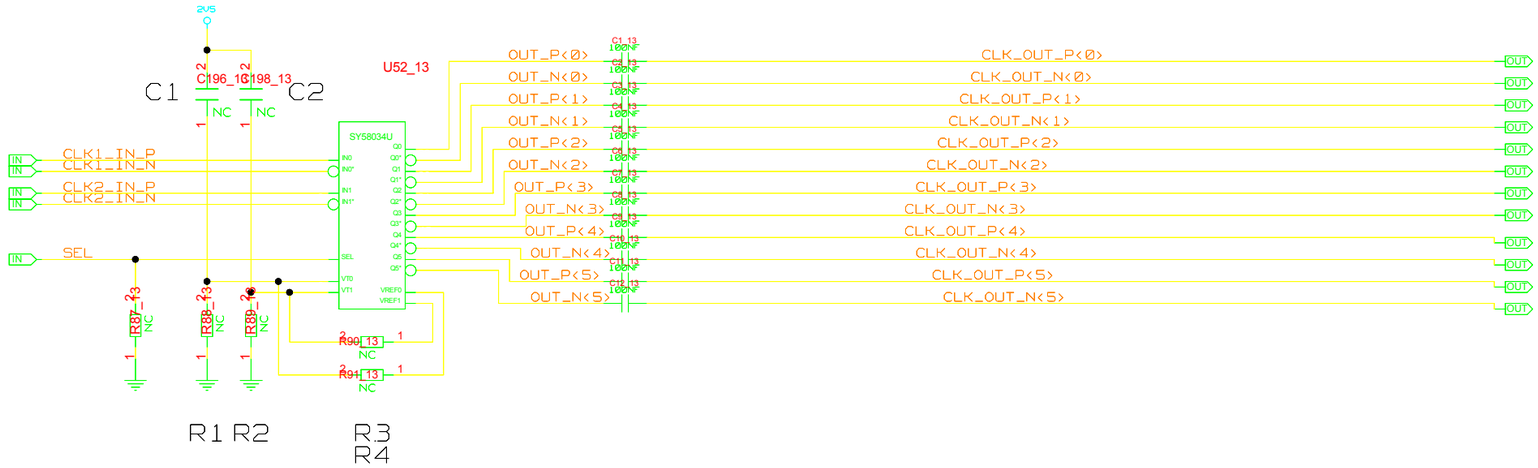

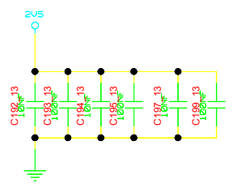

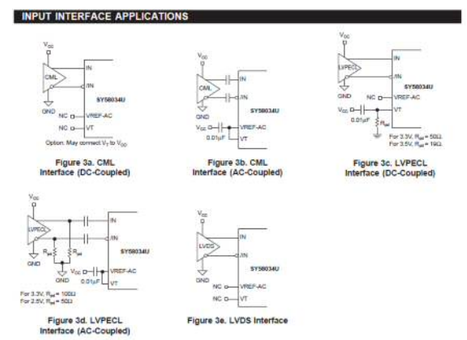

UNIVERSITY OF MAINZ	DRAWING TITLE: CLOCK CML FANOUT6 AC
BLOCK: CLOCK	SIZE: C / REV. / DRAWING NO.
	SCALE / SHEET OF

REVISIONS				
ZONE	LTR	DESCRIPTION	DATE	APPR.

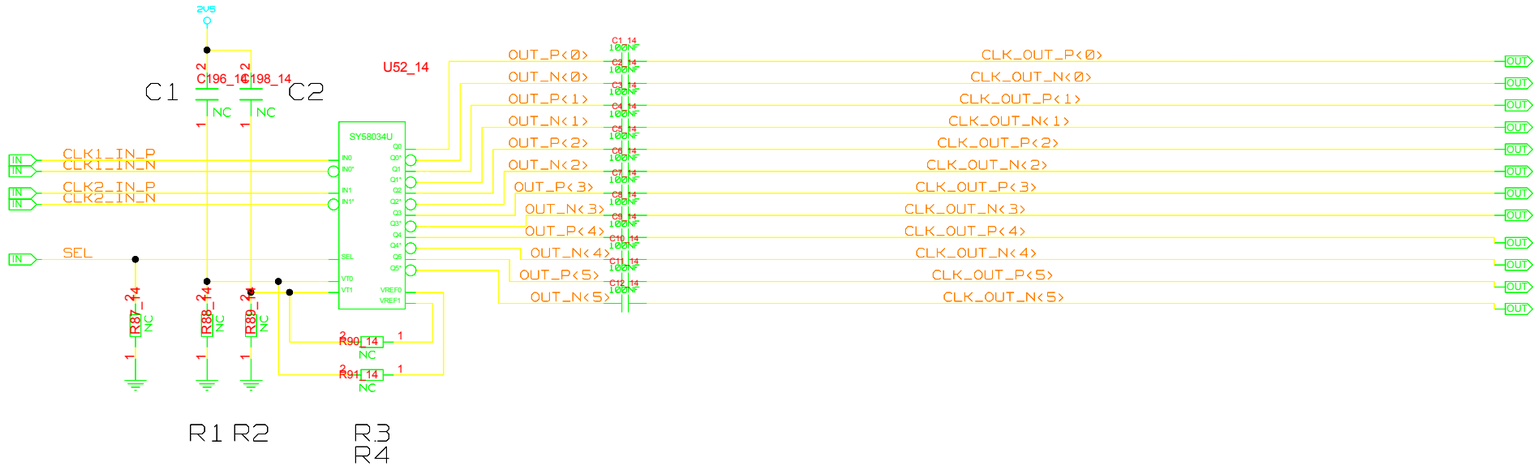

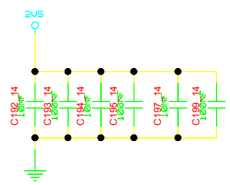

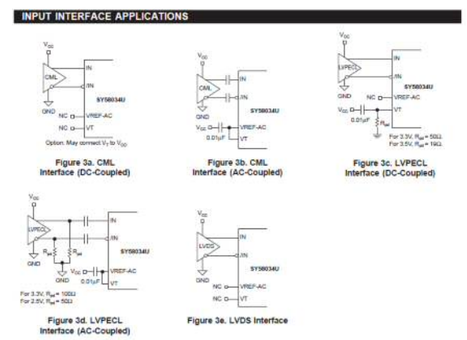

UNIVERSITY OF MAINZ

BLOCK: CLOCK

DRAWING TITLE: CLOCK CML FANOUT6 AC

SIZE: C | REV. | DRAWING NO.

SCALE | SHEET OF

REVISIONS				
ZONE	LTR	DESCRIPTION	DATE	APPR.

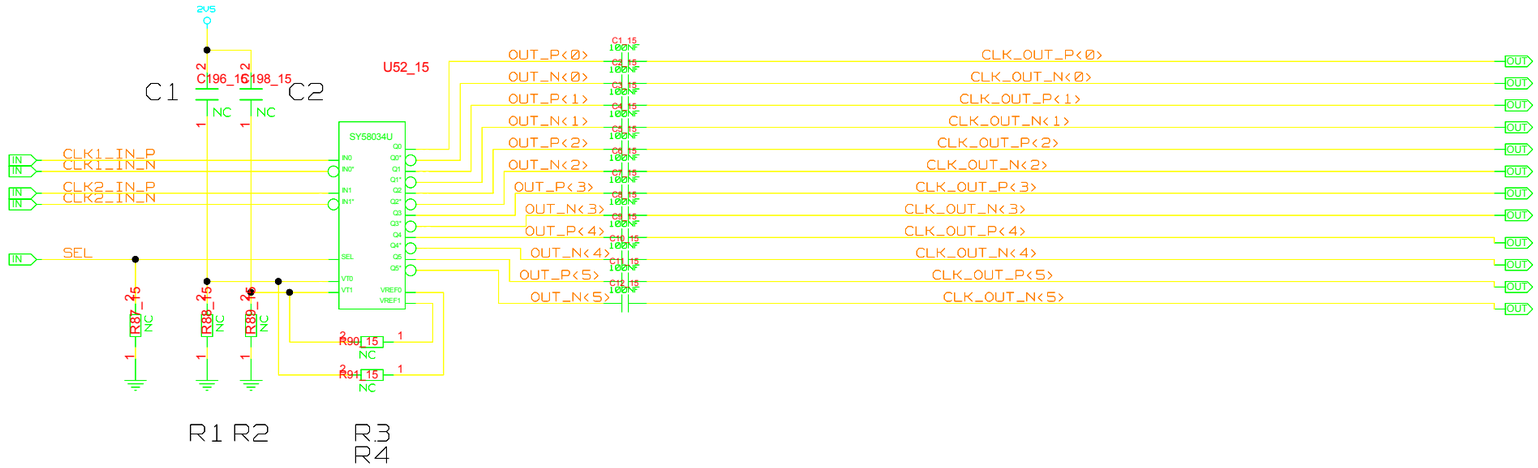

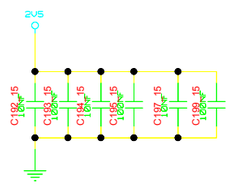

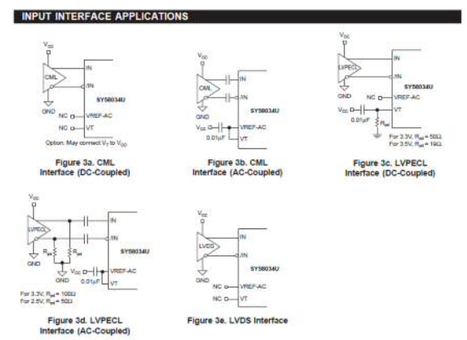

UNIVERSITY OF MAINZ	DRAWING TITLE: CLOCK CML FANOUT6 AC
BLOCK: CLOCK	SIZE: C / REV. / DRAWING NO.
	SCALE / SHEET OF

REVISIONS				
ZONE	LTR	DESCRIPTION	DATE	APPR.

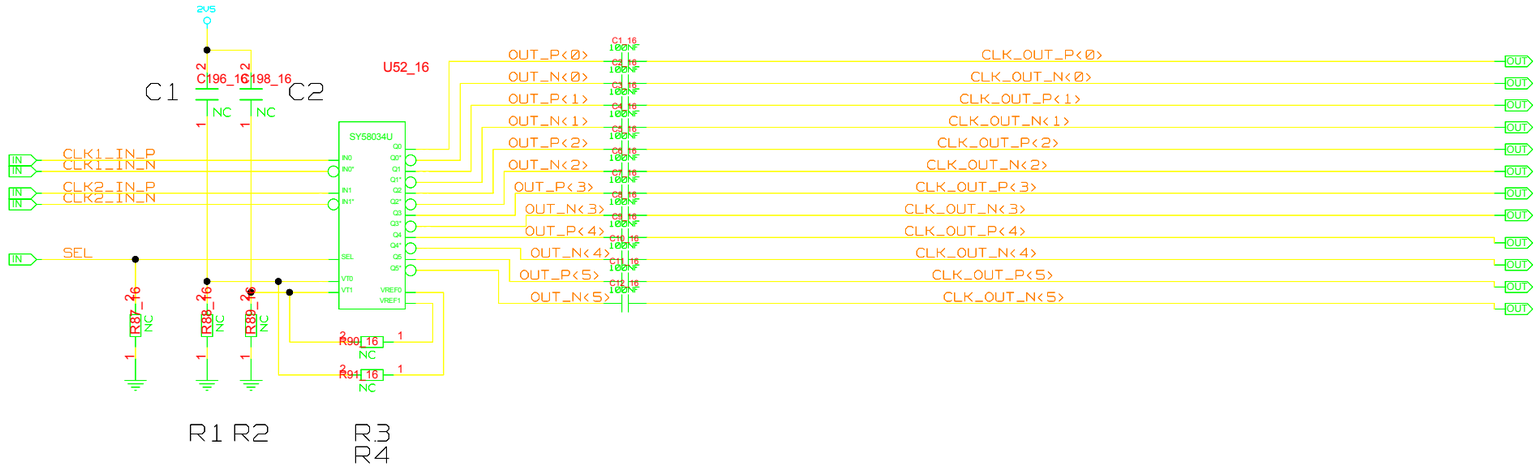

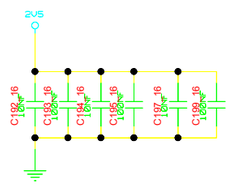

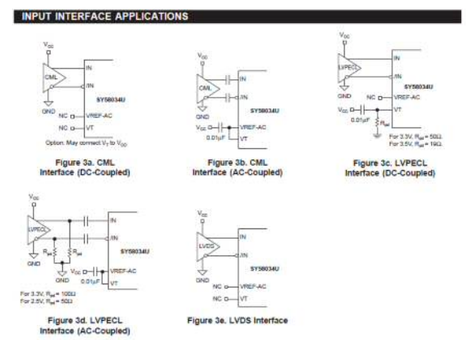

UNIVERSITY OF MAINZ	DRAWING TITLE: CLOCK CML FANOUT6 AC
BLOCK: CLOCK	SIZE: C / REV. / DRAWING NO.
	SCALE / SHEET OF

REVISIONS				
ZONE	LTR	DESCRIPTION	DATE	APPR.

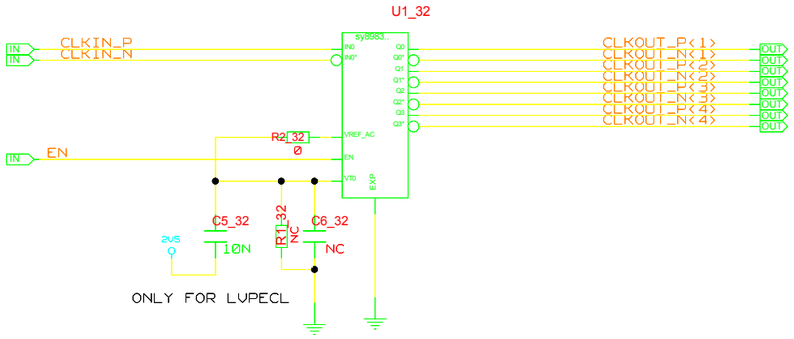

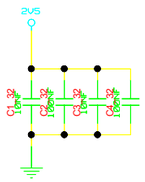

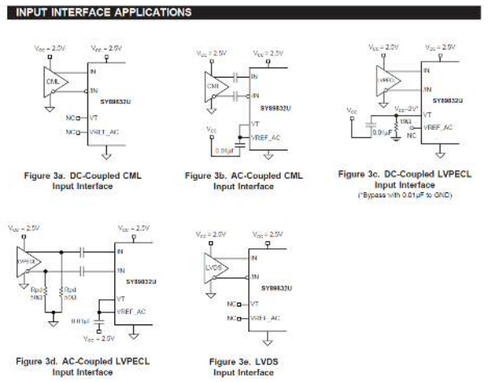

UNIVERSITY OF MAINZ	DRAWING TITLE CLOCK LVDS FANOUT4 DC		
BLOCK: CLOCK	SIZE C	REV.	DRAWING NO.
	SCALE		SHEET OF

REVISIONS				
ZONE	LTR	DESCRIPTION	DATE	APPR.

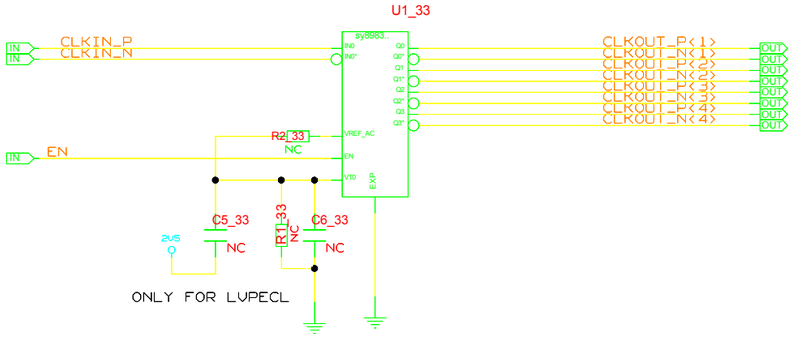

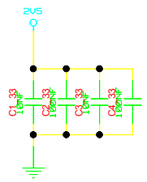

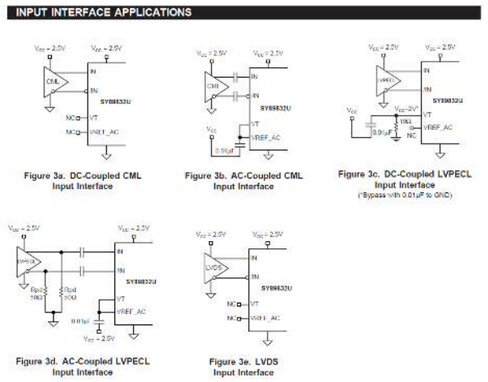

UNIVERSITY OF MAINZ

BLOCK: CLOCK

DRAWING TITLE: CLOCK LVDS FANOUT4 DC

SIZE: C | REV. | DRAWING NO.

SCALE | SHEET OF

REVISIONS				
ZONE	LTR	DESCRIPTION	DATE	APPR.

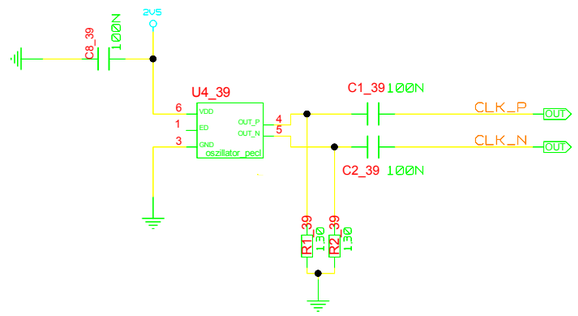

UNIVERSITY OF MAINZ

BLOCK: CLOCK

DRAWING TITLE

CLOCK_LVPECL_AC

SIZE C

REV.

DRAWING NO.

SCALE

SHEET OF

REVISIONS				
ZONE	LTR	DESCRIPTION	DATE	APPR.

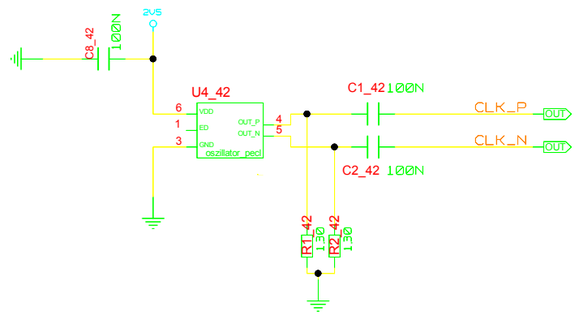

UNIVERSITY OF MAINZ

BLOCK: CLOCK

DRAWING TITLE

CLOCK_LVPECL_AC

SIZE C

REV.

DRAWING NO.

SCALE

SHEET OF

REVISIONS				
ZONE	LTR	DESCRIPTION	DATE	APPR.

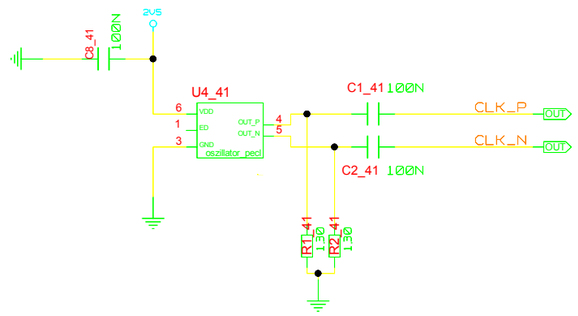

UNIVERSITY OF MAINZ

BLOCK: CLOCK

DRAWING TITLE

CLOCK_LVPECL_AC

SIZE C

REV.

DRAWING NO.

SCALE

SHEET OF

REVISIONS				
ZONE	LTR	DESCRIPTION	DATE	APPR.

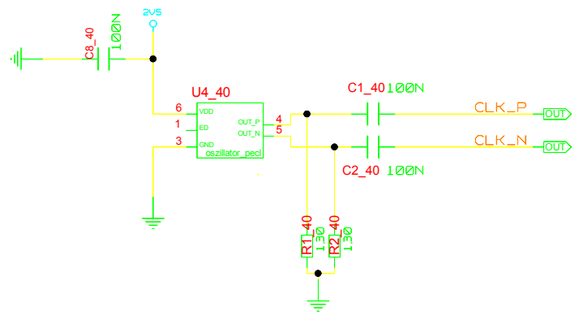

UNIVERSITY OF MAINZ

BLOCK: CLOCK

DRAWING TITLE

CLOCK_LVPECL_AC

SIZE C

REV.

DRAWING NO.

SCALE

SHEET OF

REVISIONS				
ZONE	LTR	DESCRIPTION	DATE	APPR.

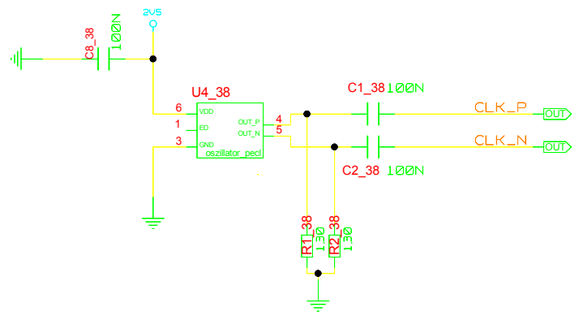

UNIVERSITY OF MAINZ

BLOCK: CLOCK

DRAWING TITLE

CLOCK_LVPECL_AC

SIZE C

REV.

DRAWING NO.

SCALE

SHEET OF

REVISIONS				
ZONE	LTR	DESCRIPTION	DATE	APPR.

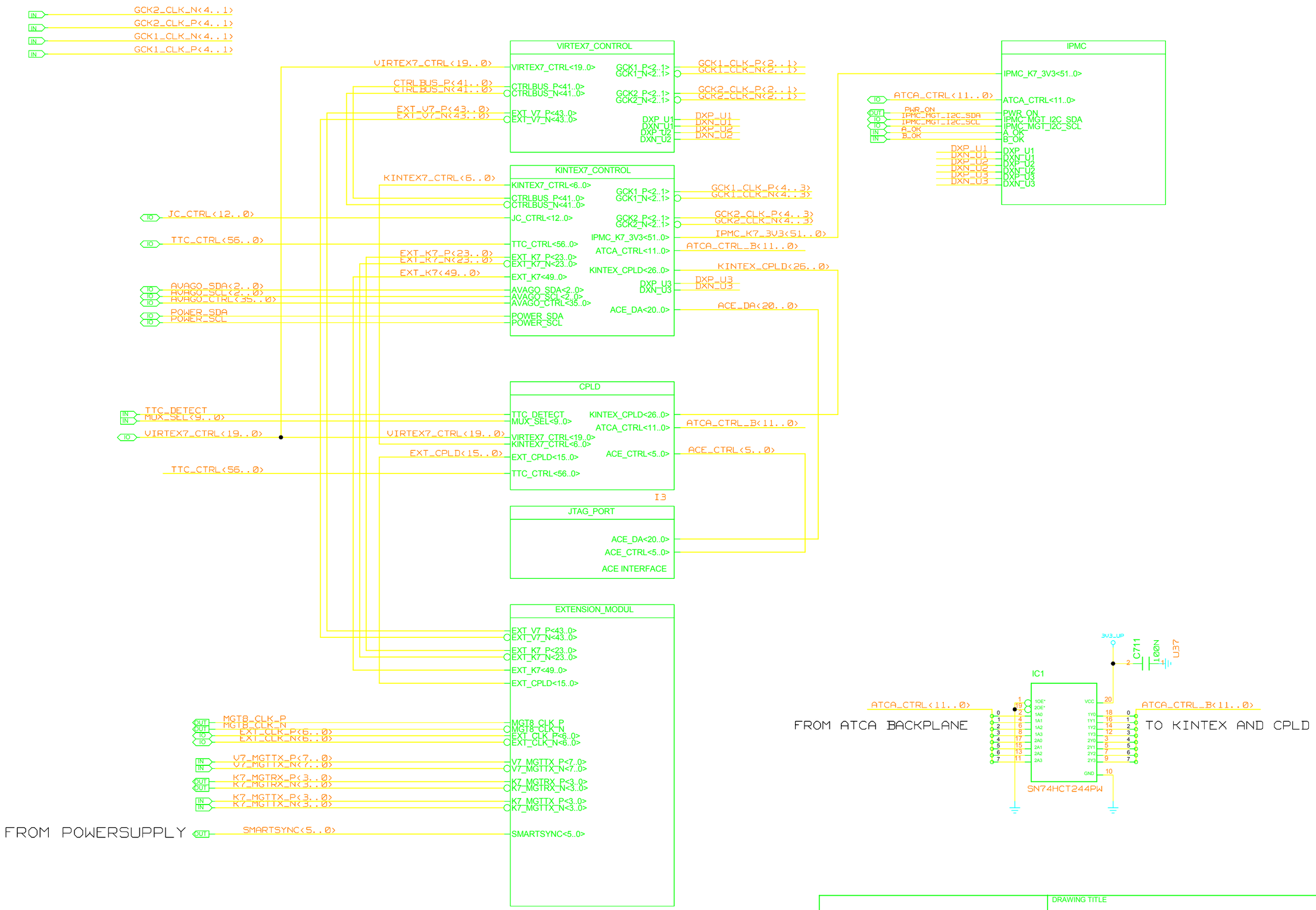

UNIVERSITY OF MAINZ

BLOCK: CONTROL

DRAWING TITLE: BOARDCONTROL

SIZE: C

REV.: 30.05.2014

DRAWING NO.

SCALE

SHEET OF

REVISIONS				
ZONE	LTR	DESCRIPTION	DATE	APPR.

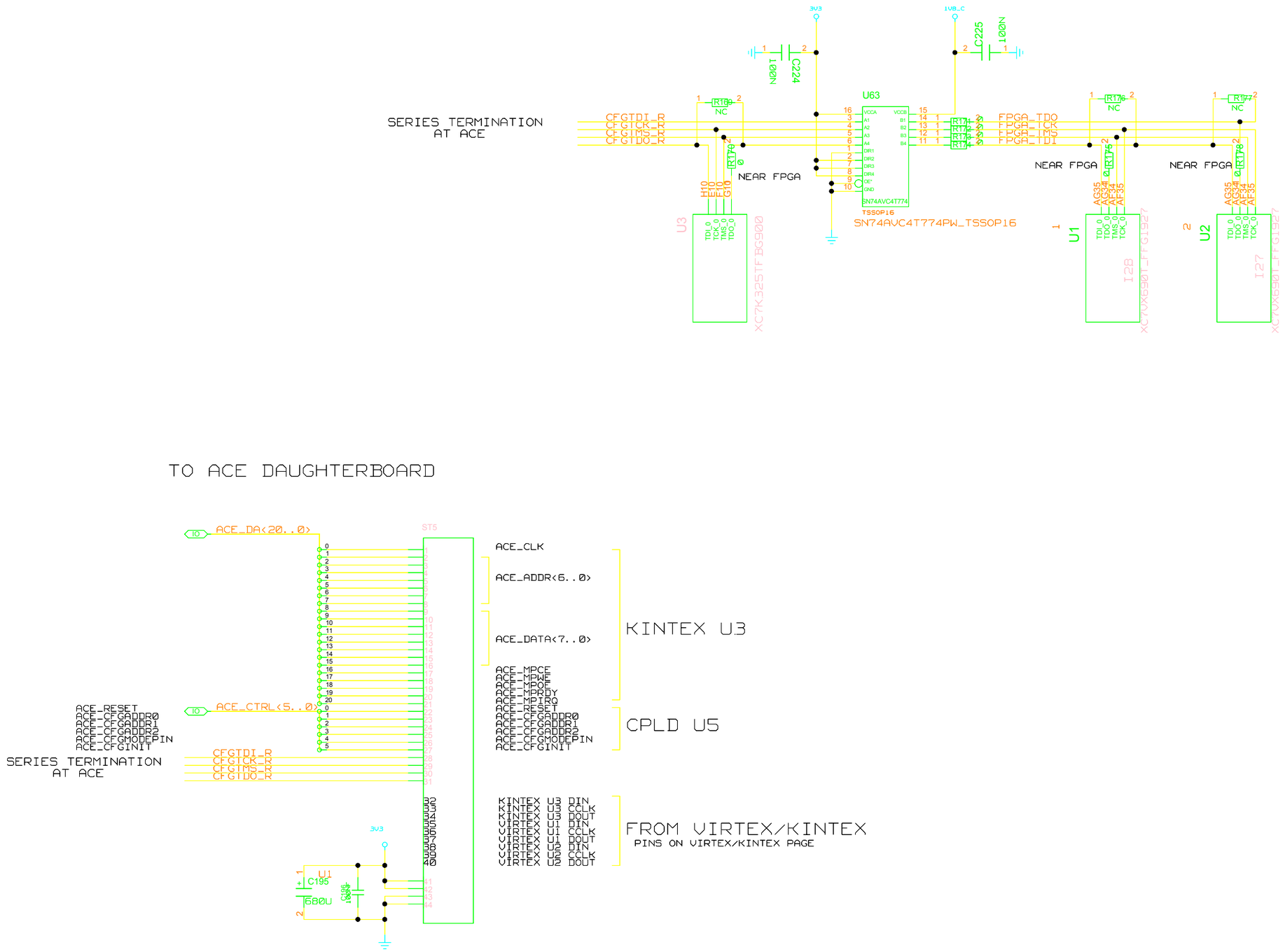

UNIVERSITY OF MAINZ

BLOCK: CONTROL
JTAG

DRAWING TITLE: JTAG + ACE INTERFACE

SIZE: C | REV.: 02.06.2014 | DRAWING NO.

SCALE | SHEET OF

REVISIONS				
ZONE	LTR	DESCRIPTION	DATE	APPR.

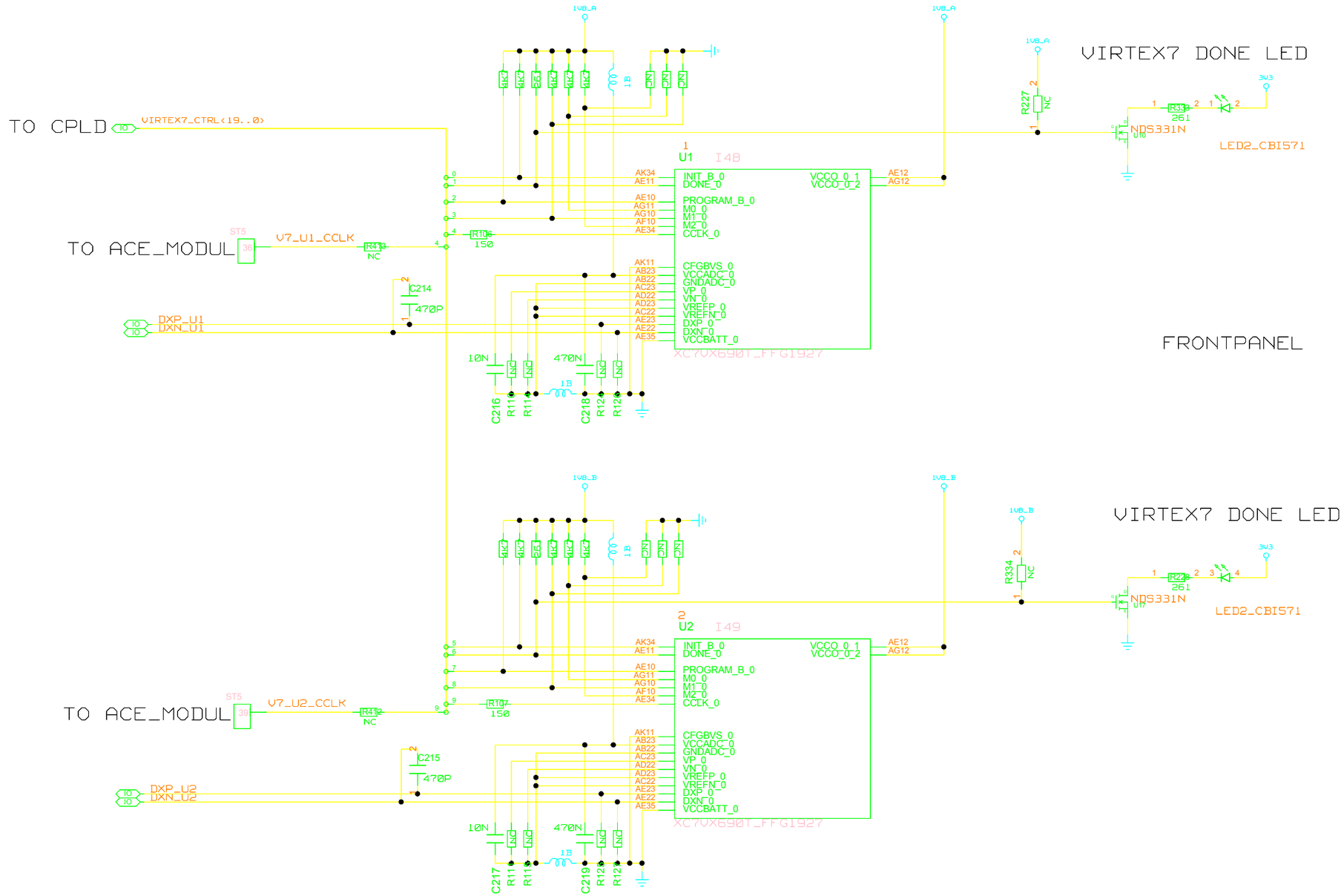

UNIVERSITY OF MAINZ

BLOCK: CONTROL
VIRTEX7 CONTROL

DRAWING TITLE: CONTROL

SIZE: C

REV.: 26.05.2014

DRAWING NO.

SCALE

SHEET OF

REVISIONS				
ZONE	LTR	DESCRIPTION	DATE	APPR.

ROD

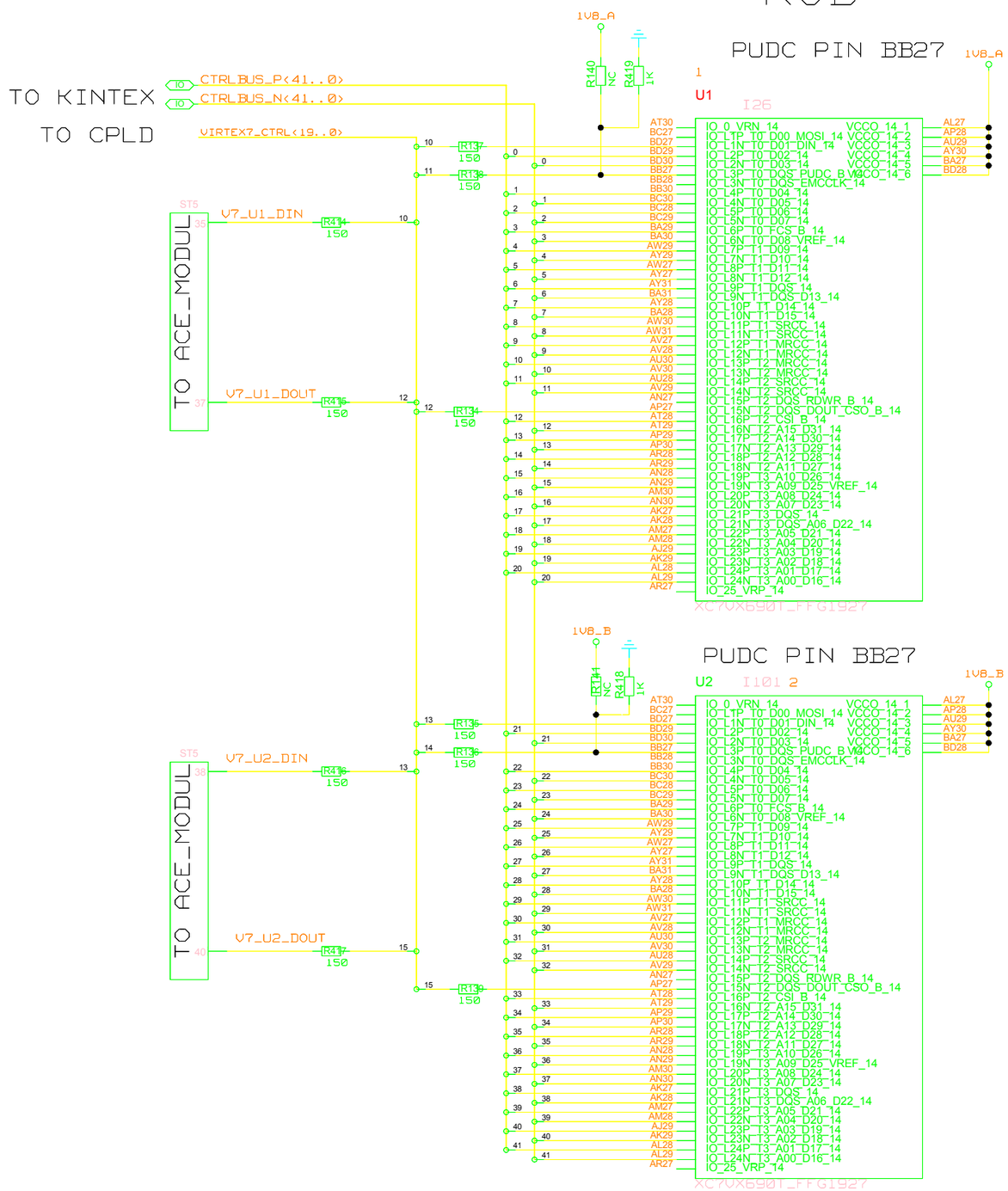

UNIVERSITY OF MAINZ

BLOCK: CONTROL
VIRTEX7 CONTROL

DRAWING TITLE
U1+U2 CONTROLBUS --> CPLD
U1+U2 RODBUS --> KINTEX7
U1+U2 --> ACE_MODUL

SIZE C | REV. 26.05.2014 | DRAWING NO.

SCALE | SHEET OF

REVISIONS				
ZONE	LTR	DESCRIPTION	DATE	APPR.

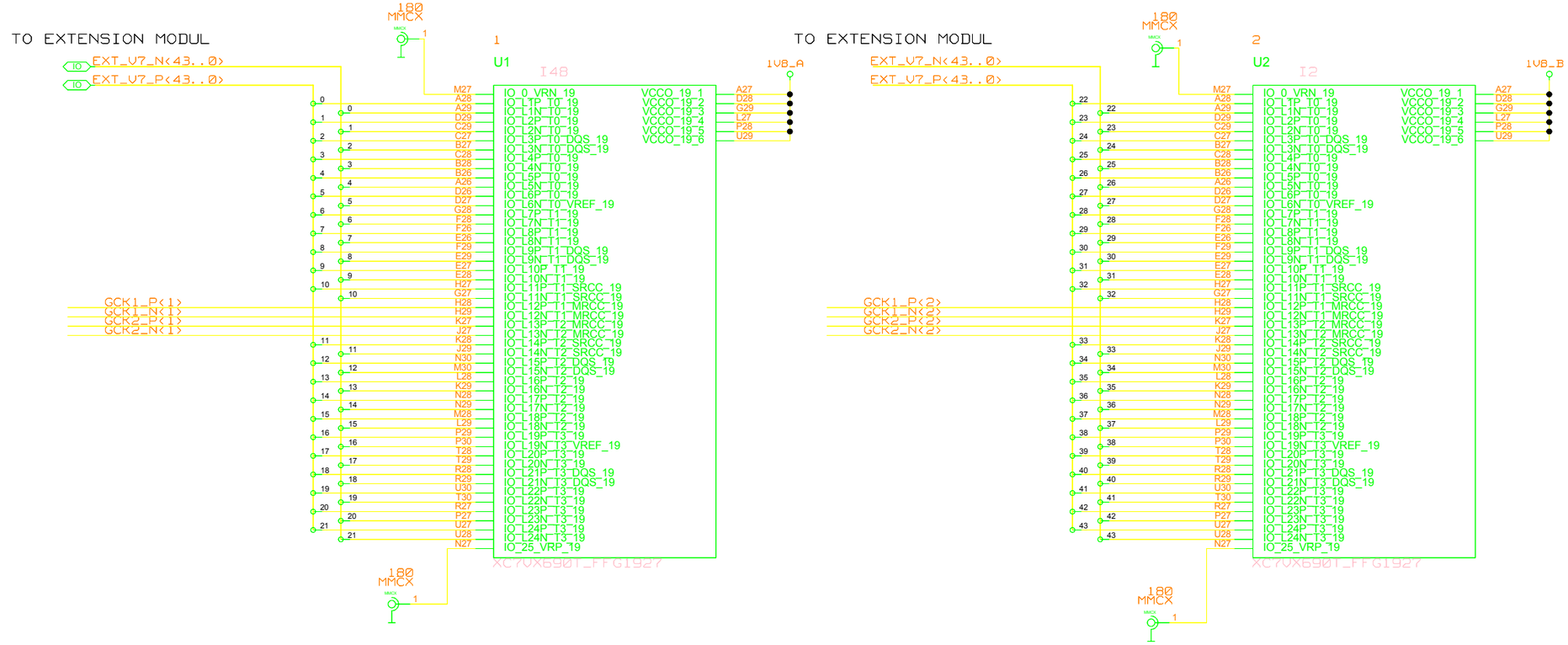

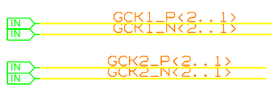

UNIVERSITY OF MAINZ

BLOCK: CONTROL
VIRTEX7 CONTROL

DRAWING TITLE
VIRTEX7 TO EXTENSION MODUL
VIRTEX7 GCK

SIZE C | REV. | DRAWING NO.

SCALE | SHEET OF

REVISIONS				
ZONE	LTR	DESCRIPTION	DATE	APPR.

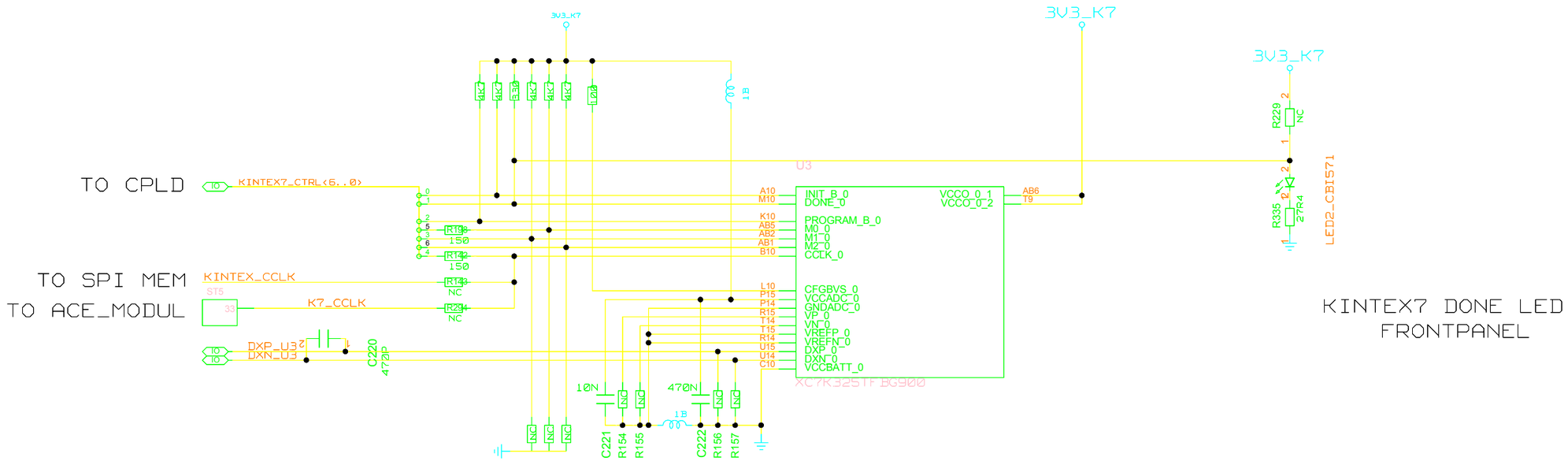

UNIVERSITY OF MAINZ	DRAWING TITLE: KINTEX CONTROL		
BLOCK: CONTROL KINTEX7 CONTROL	SIZE: C	REV.	DRAWING NO.
	SCALE		SHEET OF

REVISIONS				
ZONE	LTR	DESCRIPTION	DATE	APPR.

HIGH RANGE BANKS

PUDC PULLUP ACHTUNG PINSWAP
PIN = R23

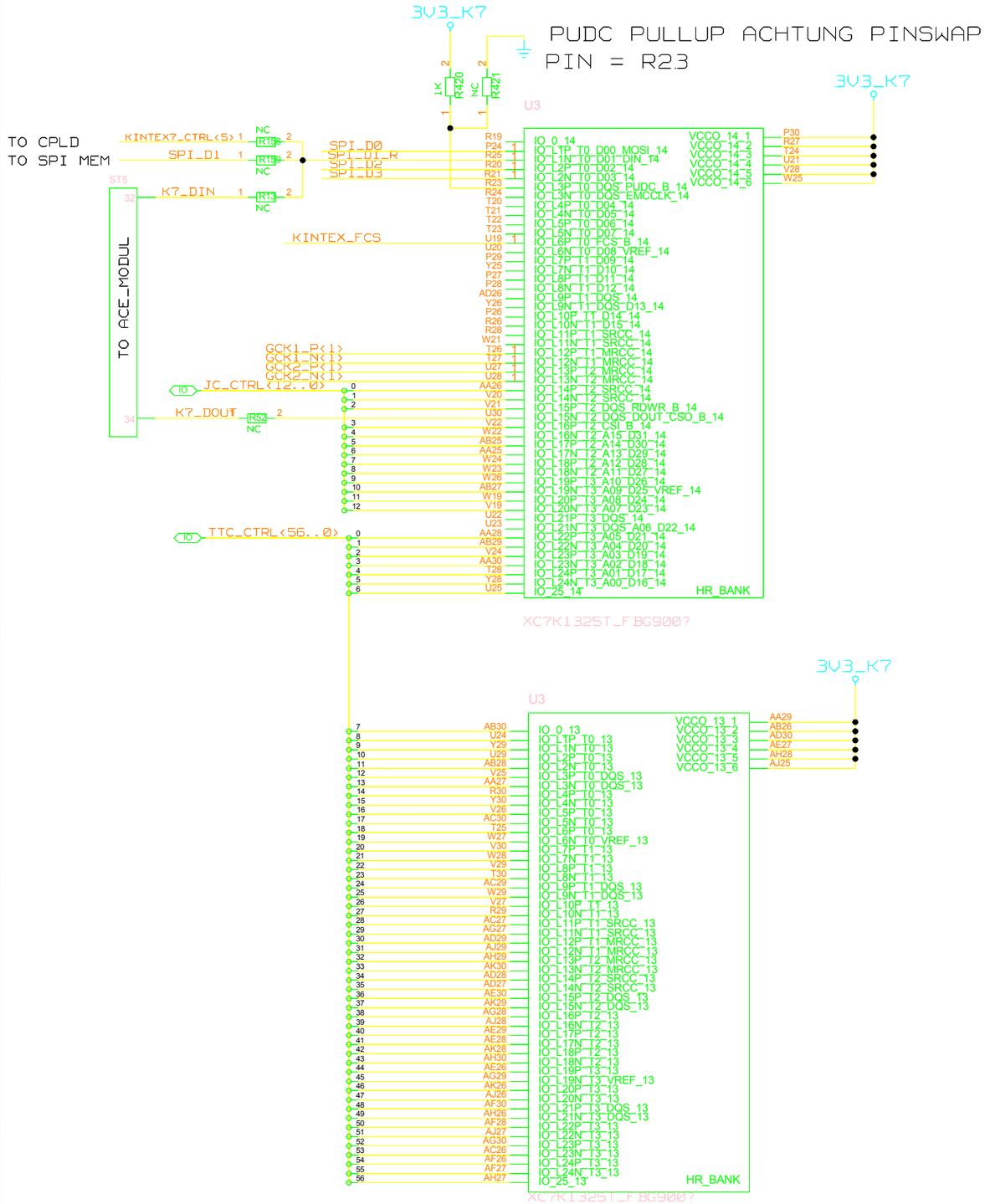

BANK14 VCCO ABHAENGIG VON SPI SPANNUNG

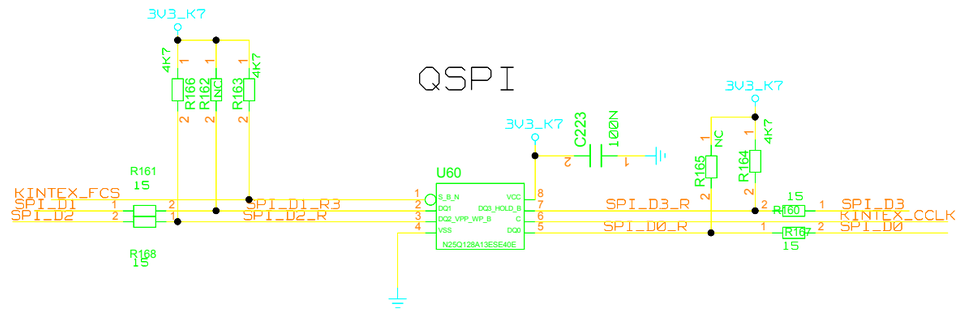

GCK1_P<2..1>
GCK1_N<2..1>
GCK2_P<2..1>
GCK2_N<2..1>

UNIVERSITY OF MAINZ	DRAWING TITLE: SD, JITTERCLEANER, TTC, QSPI CONTROL		
BLOCK: CONTROL KINTEX7 CONTROL	SIZE: C	REV.: 03.06.2014	DRAWING NO.
	SCALE		SHEET OF

REVISIONS				
ZONE	LTR	DESCRIPTION	DATE	APPR.

HIGH RANGE BANKS

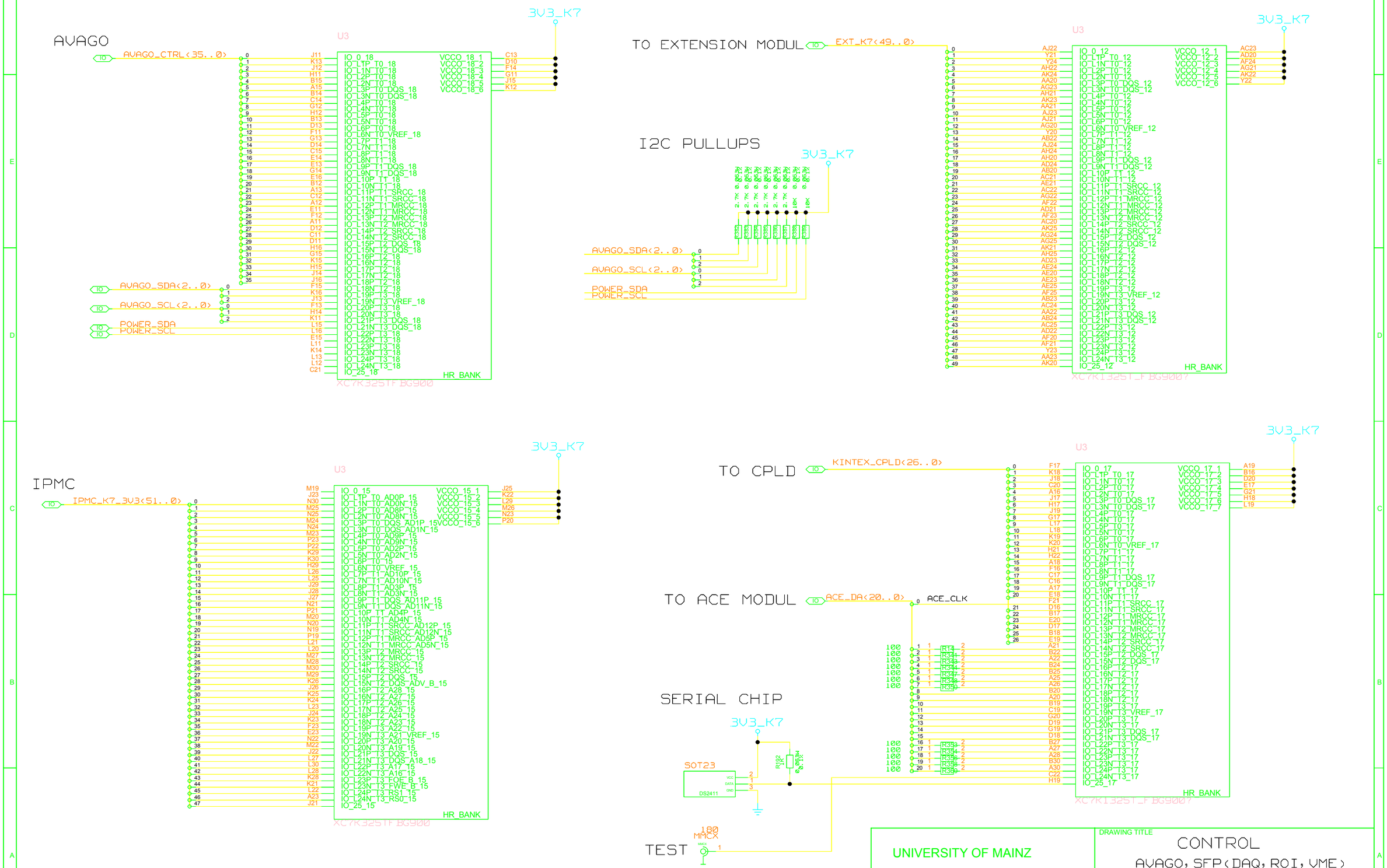

UNIVERSITY OF MAINZ

BLOCK: CONTROL
KINTEX7 CONTROL

DRAWING TITLE
CONTROL
AVAGO, SFP(DAQ, ROI, VME)

SIZE C | REV. 03.06.2014 | DRAWING NO.

SCALE | SHEET OF

REVISIONS				
ZONE	LTR	DESCRIPTION	DATE	APPR.

HIGH RANGE BANKS

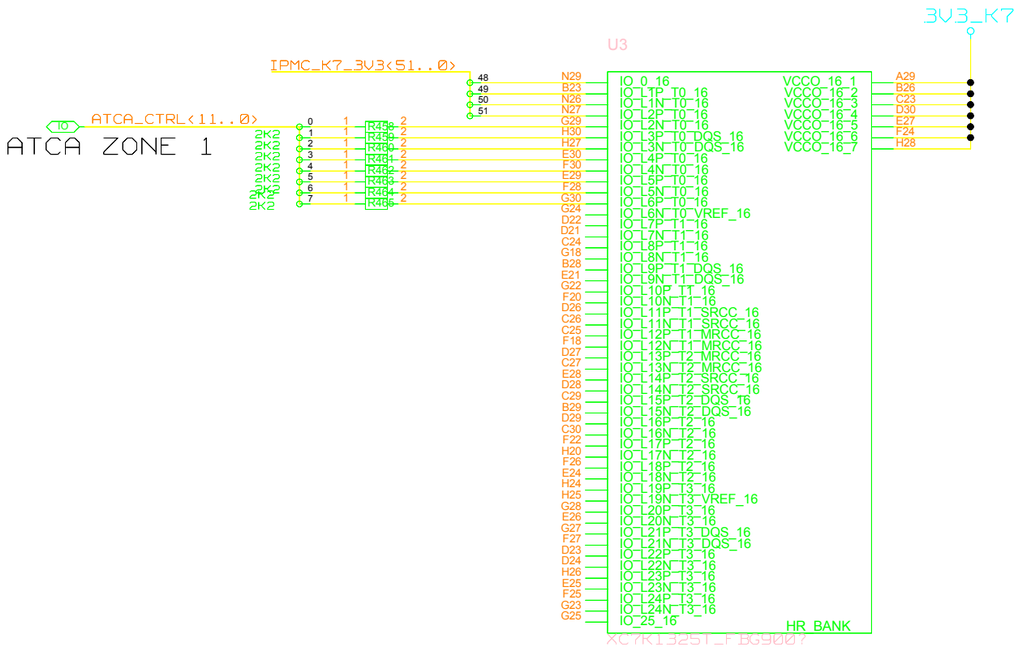

UNIVERSITY OF MAINZ

BLOCK: CONTROL
KINTEX7 CONTROL

DRAWING TITLE

SIZE C | REV. | DRAWING NO.

SCALE | SHEET OF

REVISIONS				
ZONE	LTR	DESCRIPTION	DATE	APPR.

HIGH PERFORMACE BANKS 32, 33, 34

ROD BUS

PINSWAP ONLY INSIDE SAME BANK

FROM VIRTEX7_U1/U2

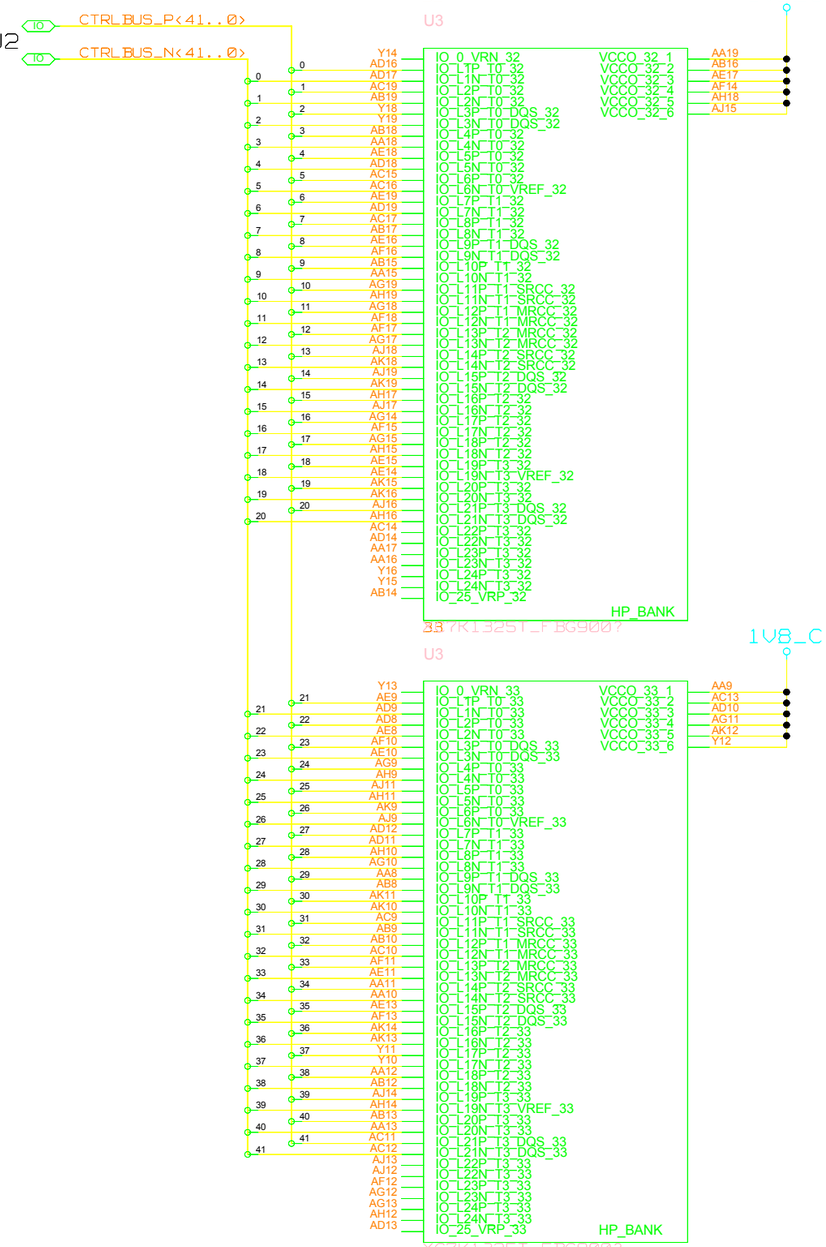

TO EXTENSION MODUL

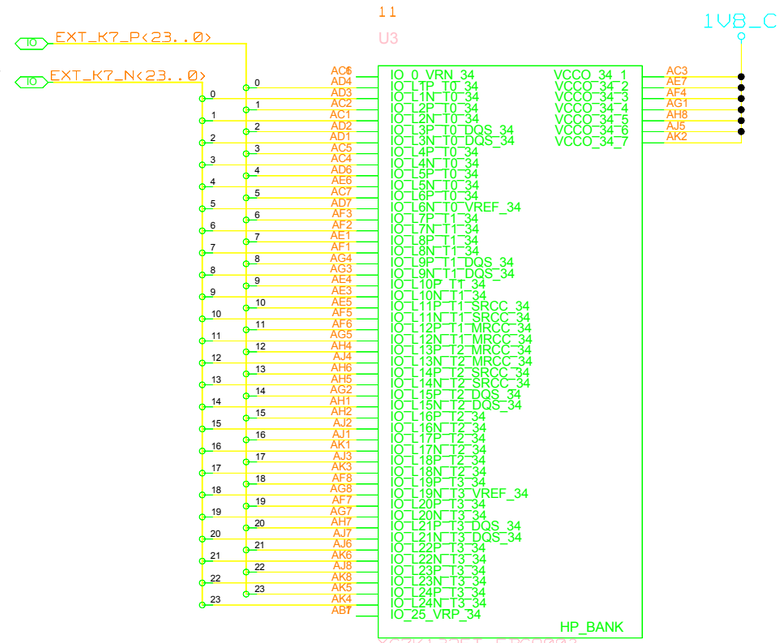

UNIVERSITY OF MAINZ

BLOCK: CONTROL
KINTEX7 CONTROL

DRAWING TITLE

CONTROL
EXTENSIONMODUL
KINTEX7 ---> VIRTEX7

SIZE C | REV. | DRAWING NO.

SCALE | SHEET OF

REVISIONS				
ZONE	LTR	DESCRIPTION	DATE	APPR.

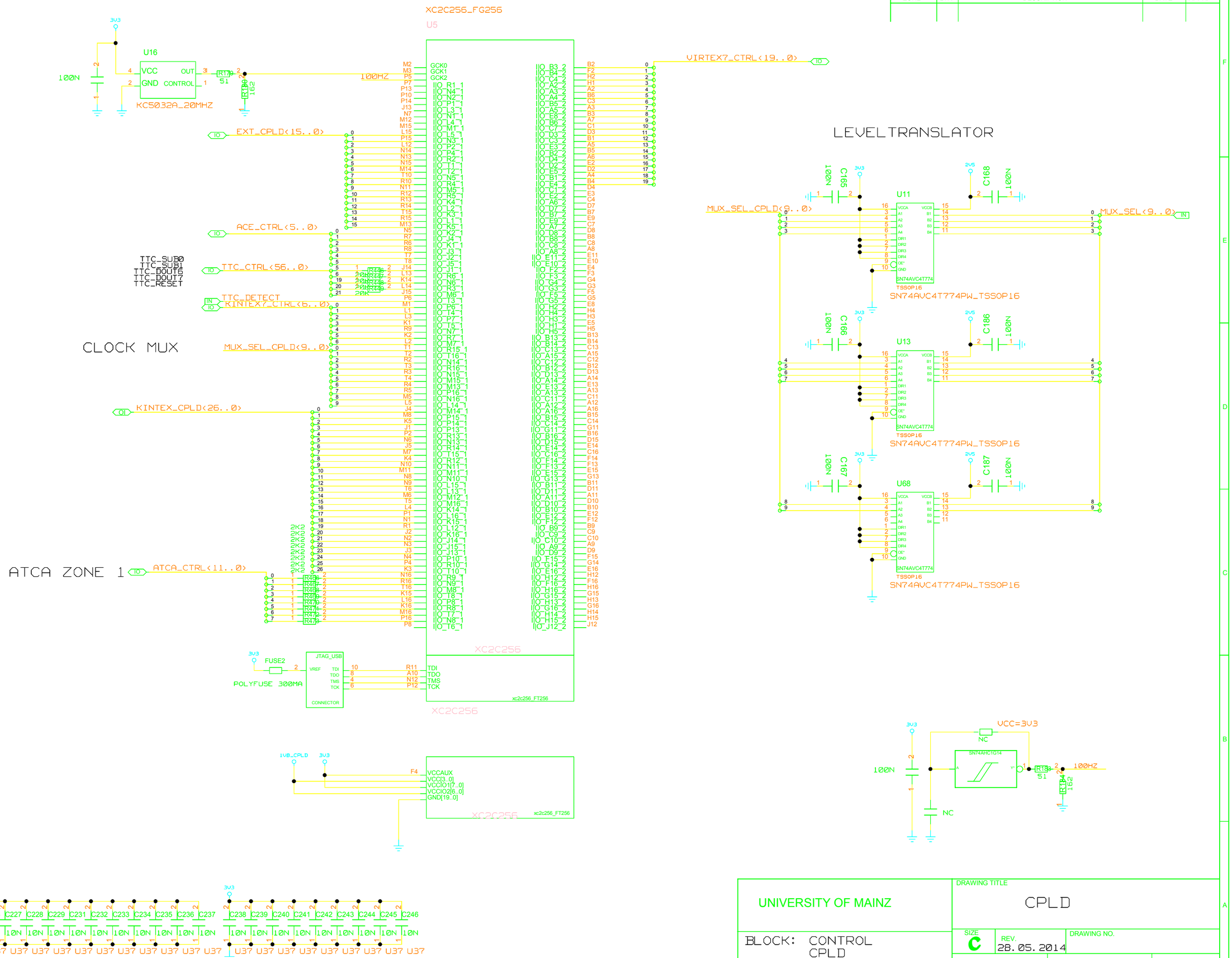

UNIVERSITY OF MAINZ	DRAWING TITLE: CPLD	
BLOCK: CONTROL CPLD	SIZE: C	REV.: 28.05.2014
	SCALE	SHEET OF

REVISIONS				
ZONE	LTR	DESCRIPTION	DATE	APPR.

IPMC MOLEX_87782-3003

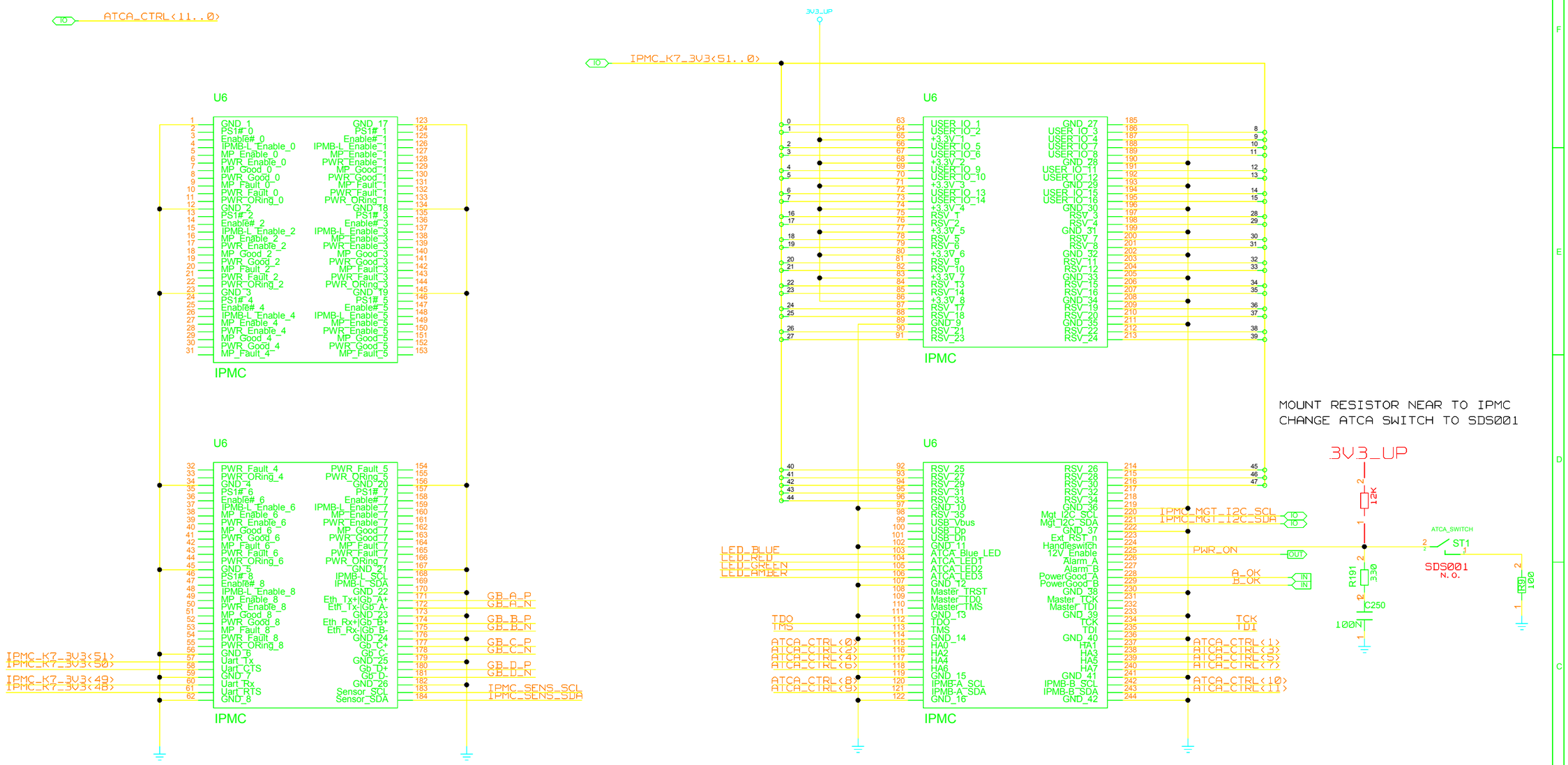

RJ45 FRONTPANEL

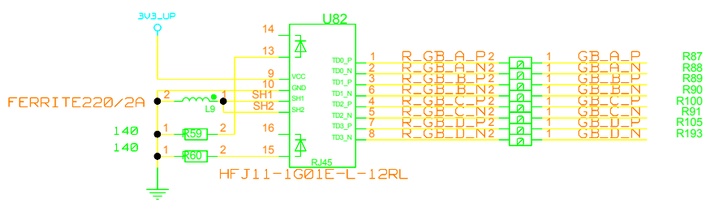

IPMC JTAG PORT FRONTPANEL

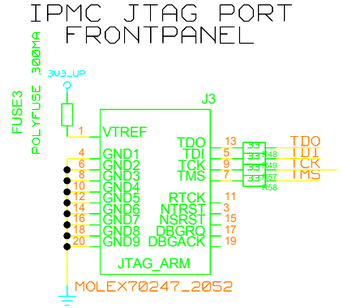

CABLE LOOP TO BACKPLANE
JTAG CONNECTOR

MEMORY

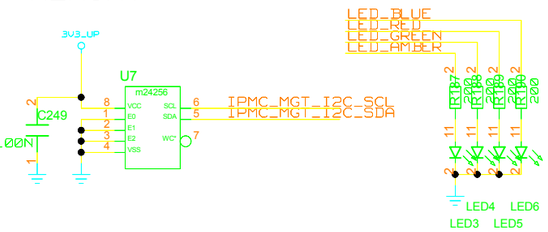

I2C BOARDTEMP

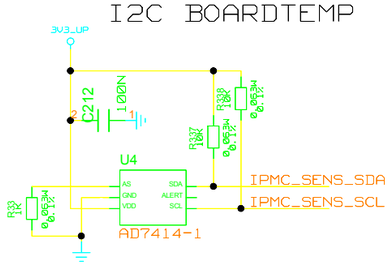

I2C BOARDTEMP

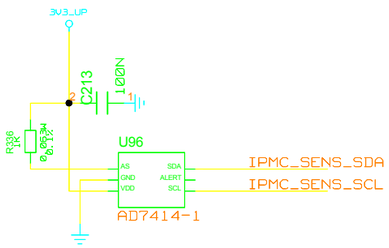

I2C FPGA TEMPERATURE

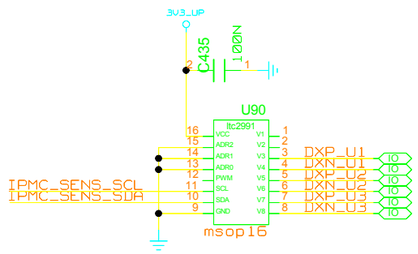

UNIVERSITY OF MAINZ	DRAWING TITLE: ATCA CONTROL
BLOCK: CONTROL IPMC	SIZE: C · REV. · DRAWING NO.
	SCALE · SHEET OF

REVISIONS				
ZONE	LTR	DESCRIPTION	DATE	APPR.

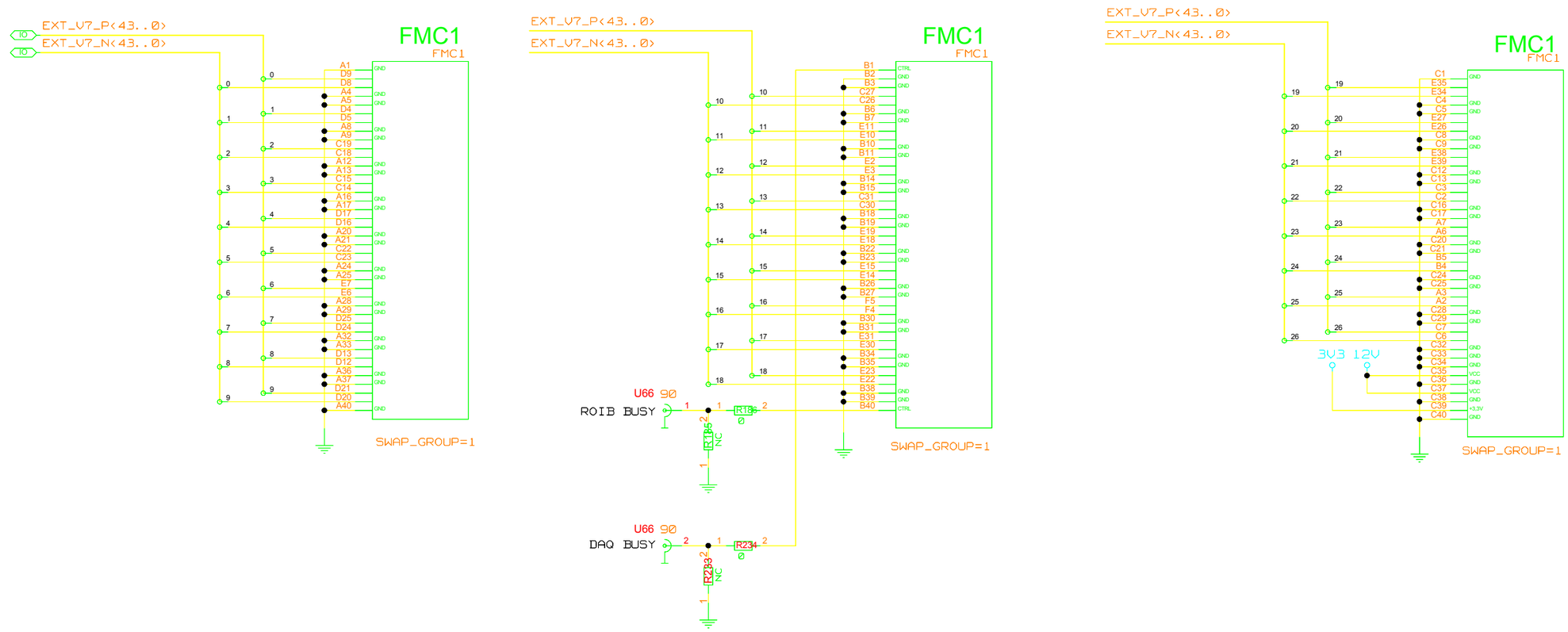

UNIVERSITY OF MAINZ

BLOCK: CONTROL
EXTENSION_MODUL

DRAWING TITLE

EXTENSION MODUL

SIZE C | REV. | DRAWING NO.

SCALE | SHEET OF

REVISIONS				
ZONE	LTR	DESCRIPTION	DATE	APPR.

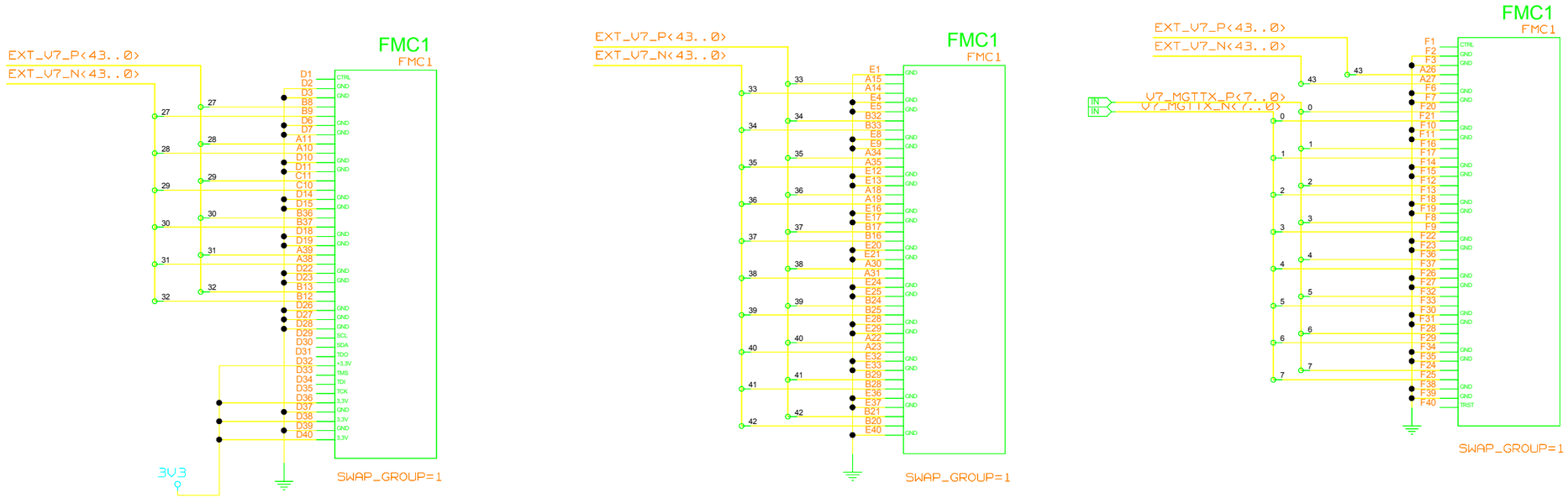

UNIVERSITY OF MAINZ

BLOCK: CONTROL
EXTENSION_MODUL

DRAWING TITLE

EXTENSION MODUL

SIZE	REV.	DRAWING NO.
C		

SCALE | SHEET OF

REVISIONS				
ZONE	LTR	DESCRIPTION	DATE	APPR.

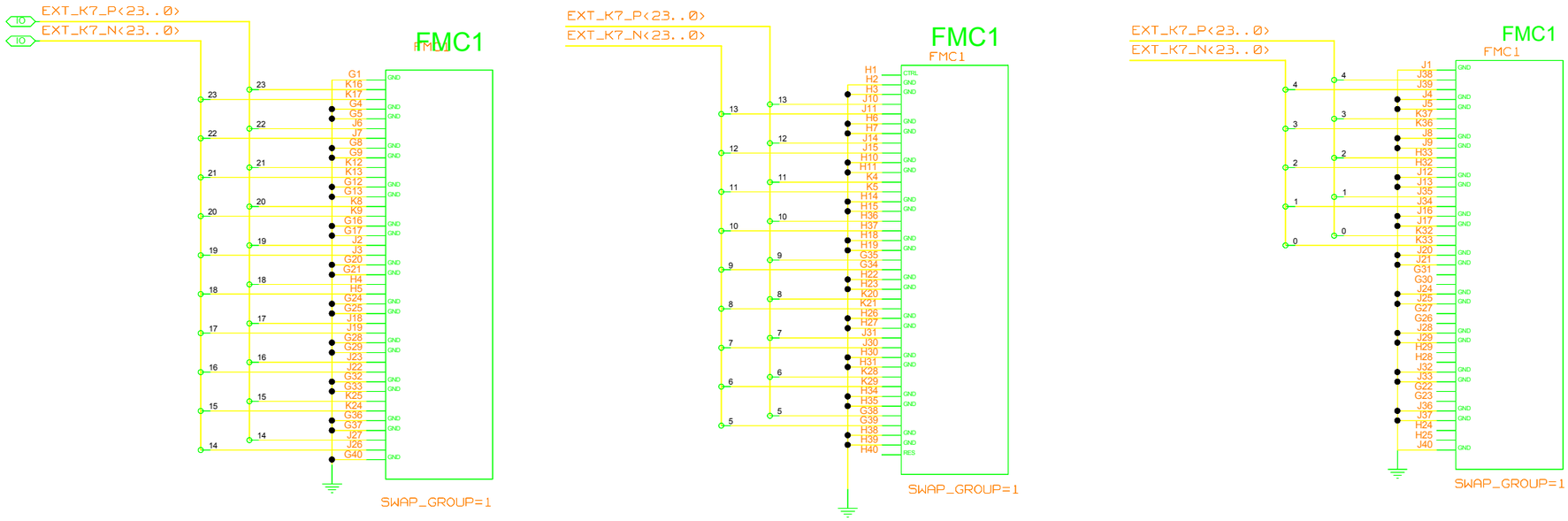

UNIVERSITY OF MAINZ

BLOCK: CONTROL
EXTENSION_MODUL

DRAWING TITLE

EXTENSION MODUL

SIZE C | REV. | DRAWING NO.

SCALE | SHEET OF

REVISIONS				
ZONE	LTR	DESCRIPTION	DATE	APPR.

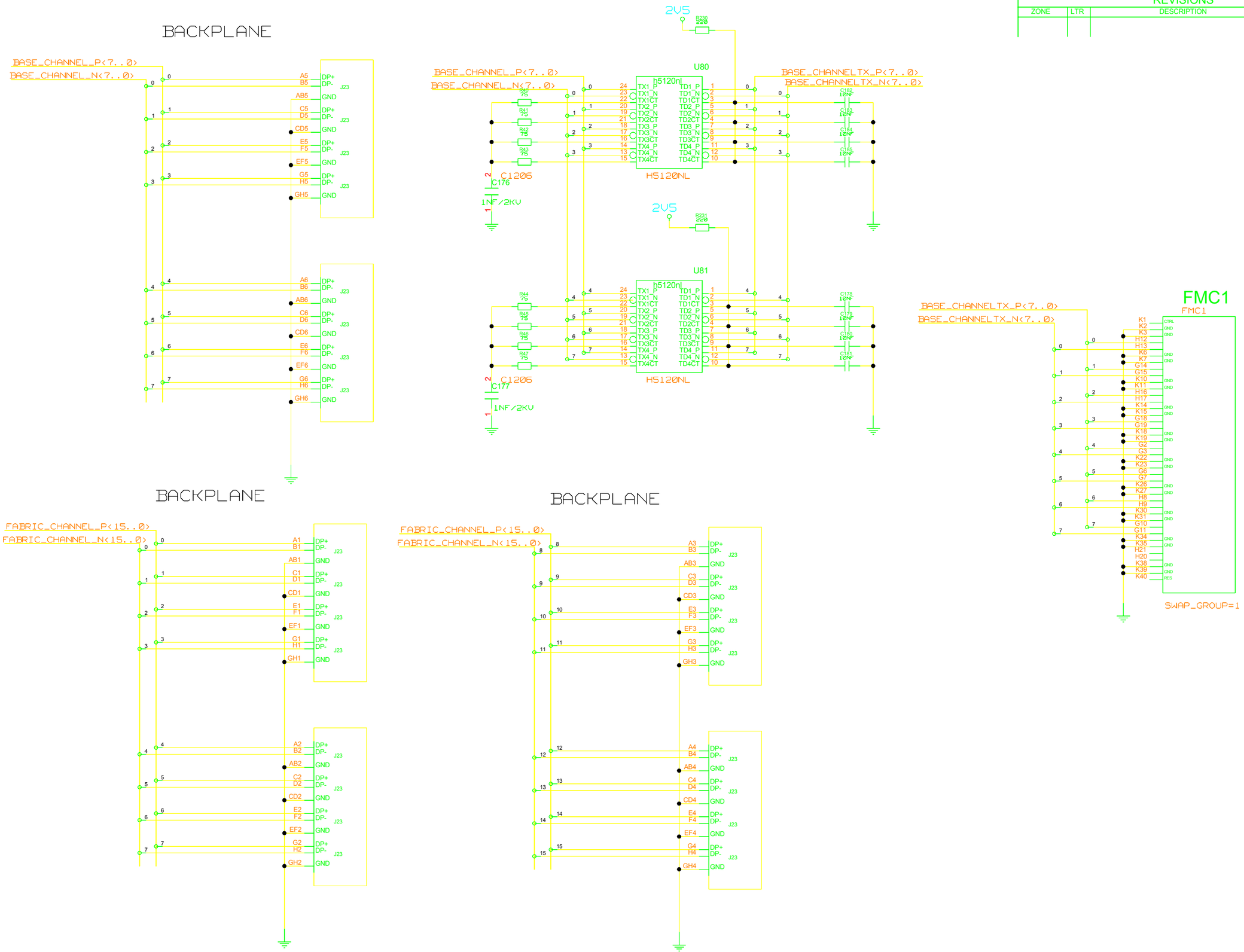

UNIVERSITY OF MAINZ

BLOCK: CONTROL EXTENSION_MODUL

DRAWING TITLE: EXTENSION MODUL

SIZE: C | REV. | DRAWING NO.

SCALE | SHEET OF

REVISIONS				
ZONE	LTR	DESCRIPTION	DATE	APPR.

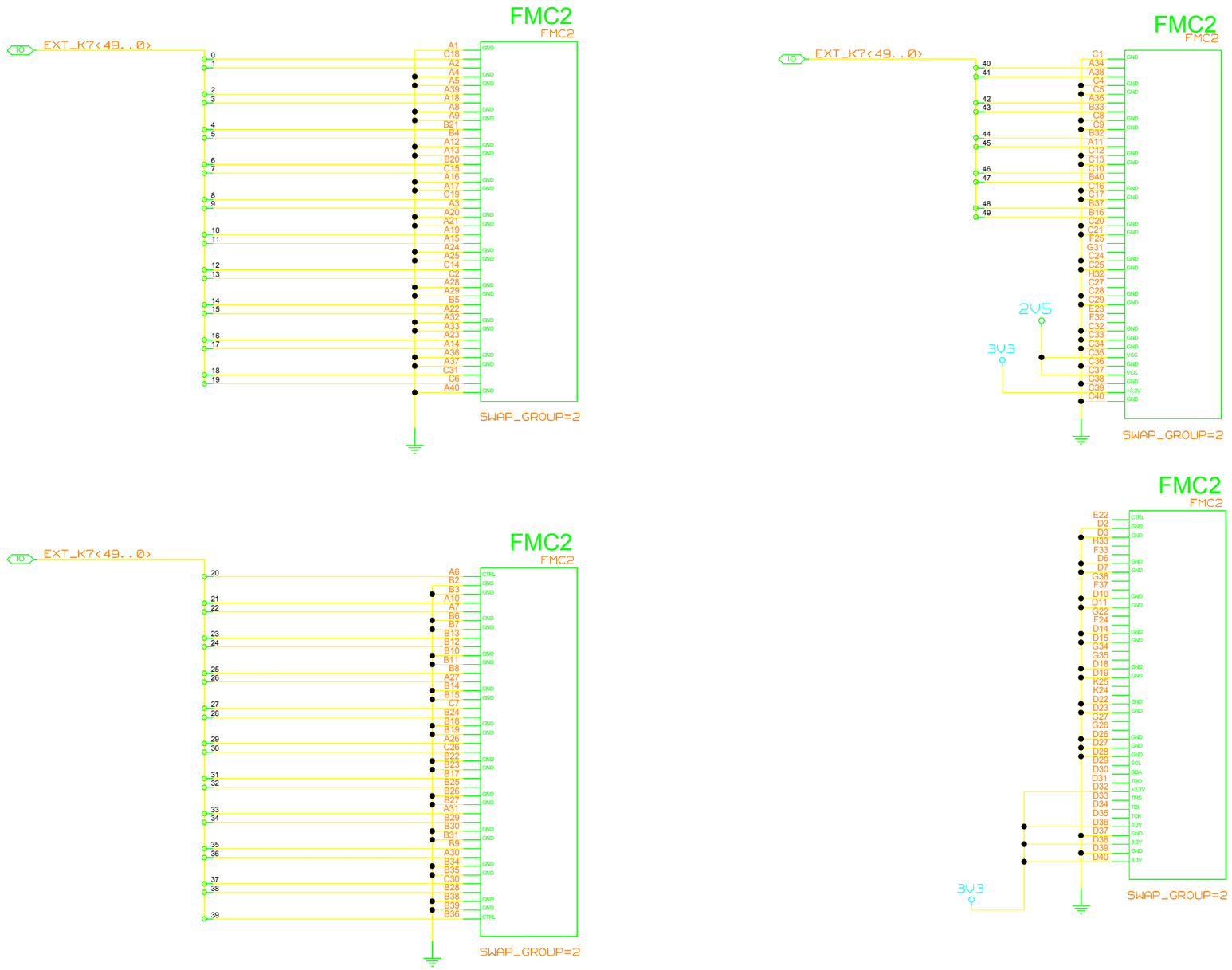

UNIVERSITY OF MAINZ	DRAWING TITLE: EXTENSION MODUL		
BLOCK: CONTROL EXTENSION_MODUL	SIZE C	REV.	DRAWING NO.
	SCALE		SHEET OF

REVISIONS				
ZONE	LTR	DESCRIPTION	DATE	APPR.

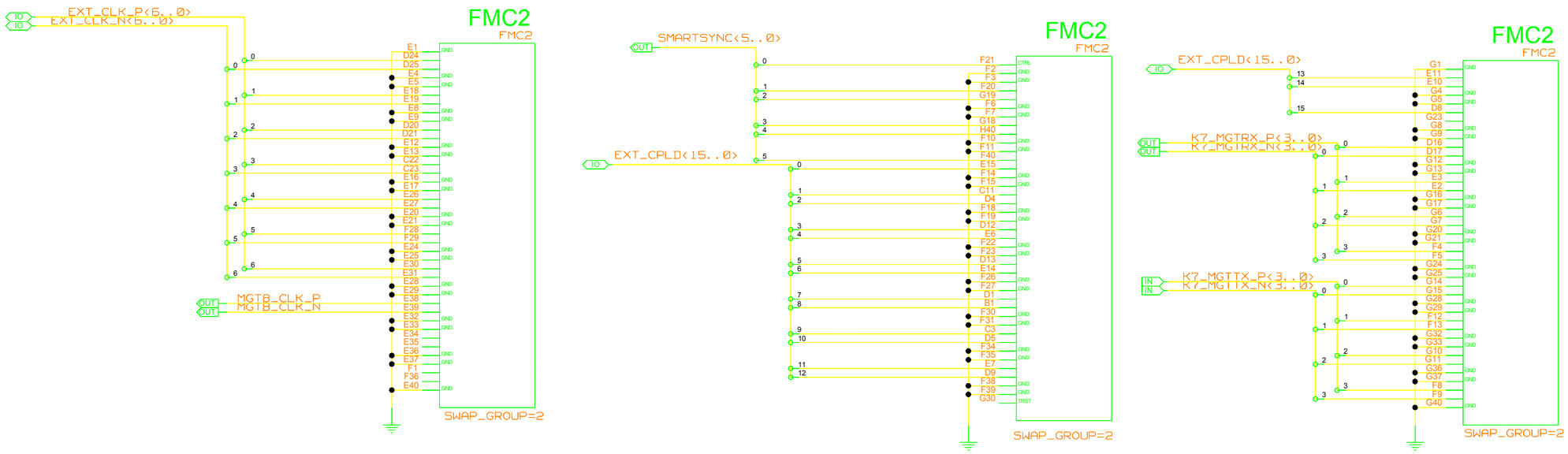

UNIVERSITY OF MAINZ

BLOCK: CONTROL
EXTENSION_MODUL

DRAWING TITLE: EXTENSION MODUL

SIZE: C | REV. | DRAWING NO.

SCALE | SHEET OF

ZONE	LTR	REVISIONS DESCRIPTION	DATE	APPR.

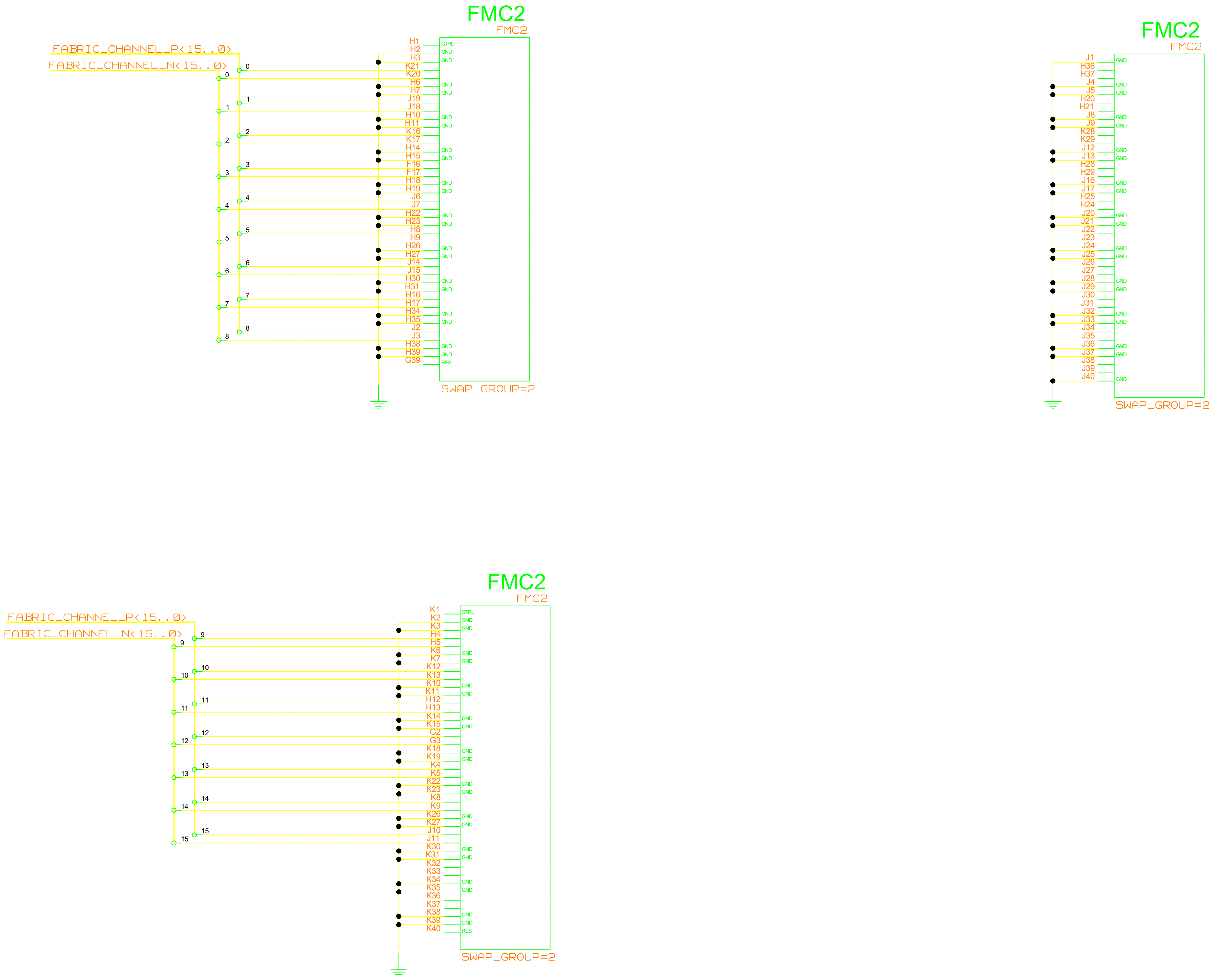

UNIVERSITY OF MAINZ

BLOCK: CONTROL EXTENSION_MODUL

DRAWING TITLE

EXTENSION MODUL

SIZE C | REV. | DRAWING NO.

SCALE | SHEET OF