REVISIONS

ZONE	LTR	DESCRIPTION	DATE	APPR.

UNIVERSITY OF MAINZ

DRAWING TITLE

SIZE C

REV.

DRAWING NO.

SCALE

SHEET OF

REVISIONS				
ZONE	LTR	DESCRIPTION	DATE	APPR.

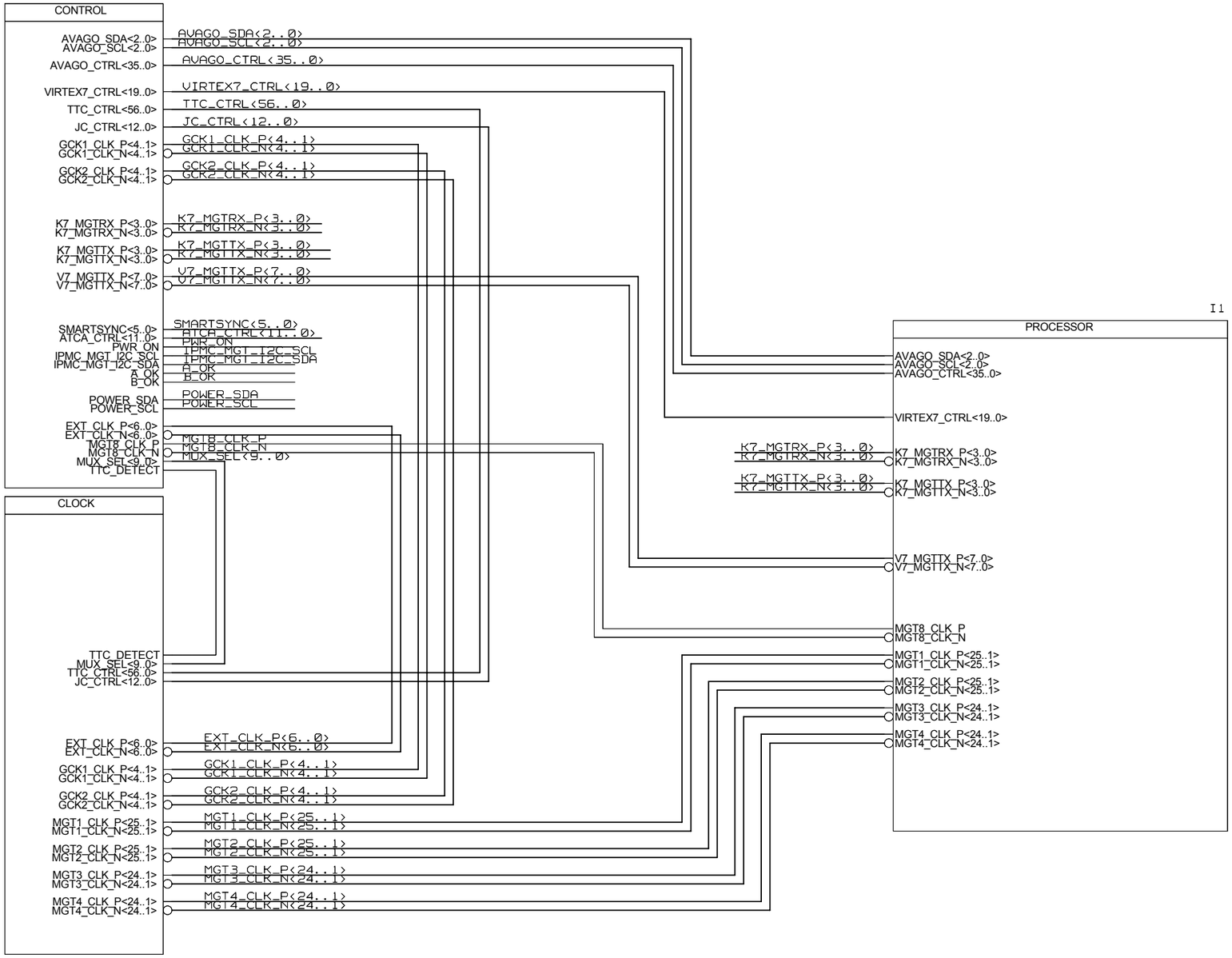

UNIVERSITY OF MAINZ

DRAWING TITLE: L1TOPO PRODUCTION

SIZE: C | REV. | DRAWING NO.

SCALE | SHEET OF

REVISIONS				
ZONE	LTR	DESCRIPTION	DATE	APPR.

UNIVERSITY OF MAINZ

BLOCK: PROCESSOR

DRAWING TITLE: OPTO INPUT AND DATA

SIZE: C | REV. | DRAWING NO.

SCALE | SHEET OF

REVISIONS				
ZONE	LTR	DESCRIPTION	DATE	APPR.

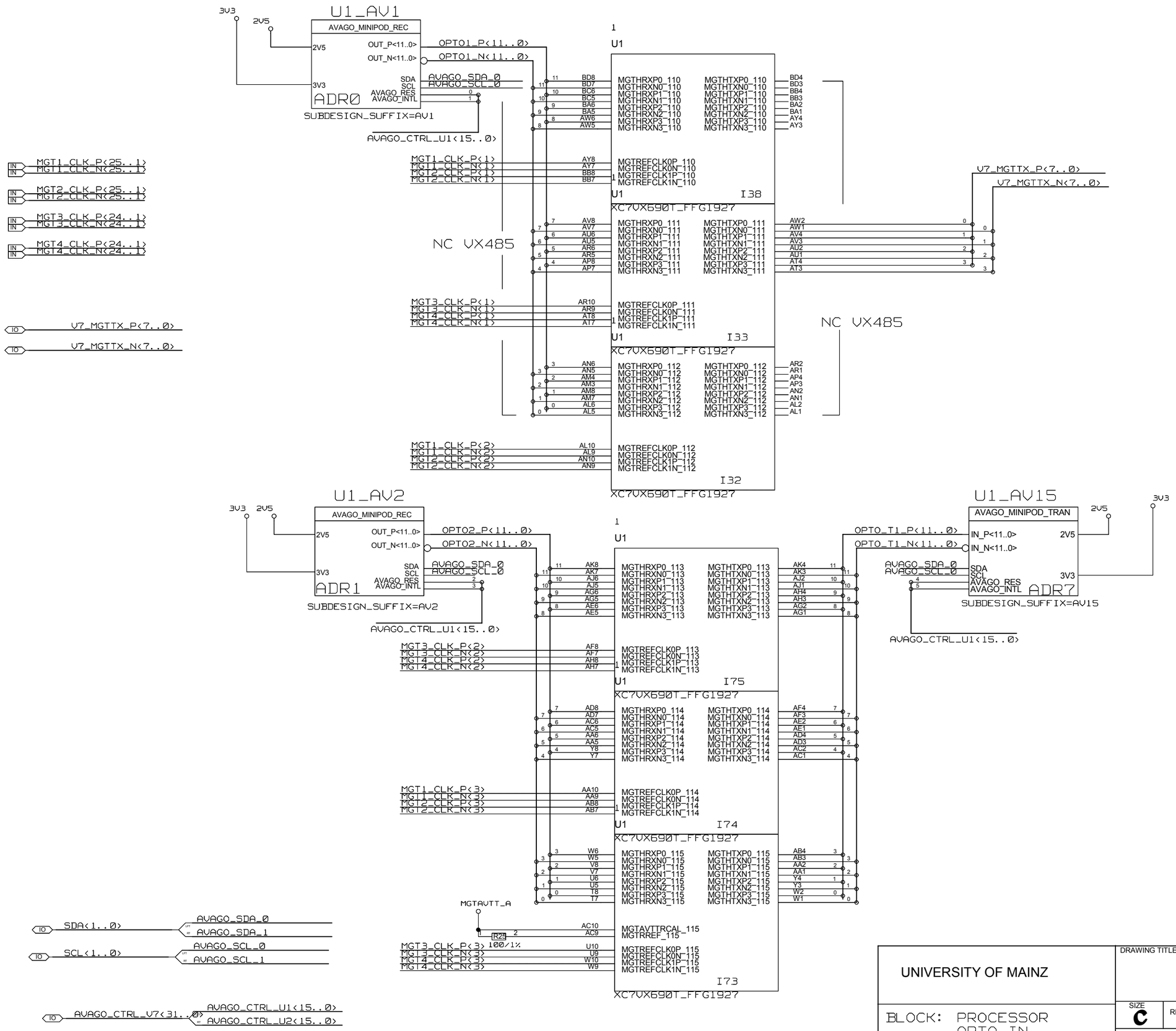

UNIVERSITY OF MAINZ

BLOCK: PROCESSOR OPTO_IN

DRAWING TITLE: OPTO INPUT / OPTO OUTPUT

SIZE: C | REV. | DRAWING NO.

SCALE | SHEET OF

REVISIONS				
ZONE	LTR	DESCRIPTION	DATE	APPR.

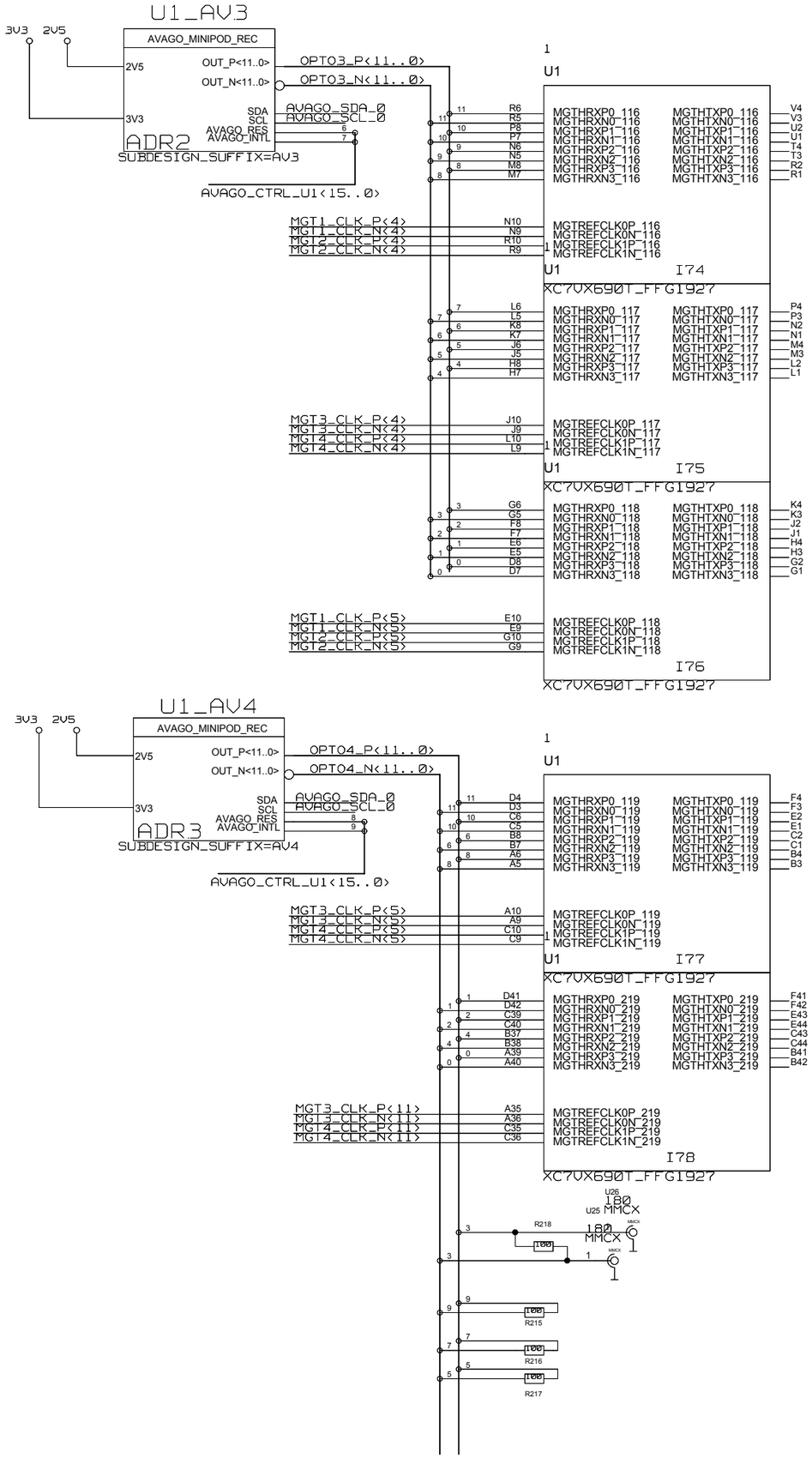

UNIVERSITY OF MAINZ

BLOCK: PROCESSOR
OPTO_IN

DRAWING TITLE: OPTO INPUT

SIZE: C | REV. | DRAWING NO.

SCALE | SHEET OF

REVISIONS				
ZONE	LTR	DESCRIPTION	DATE	APPR.

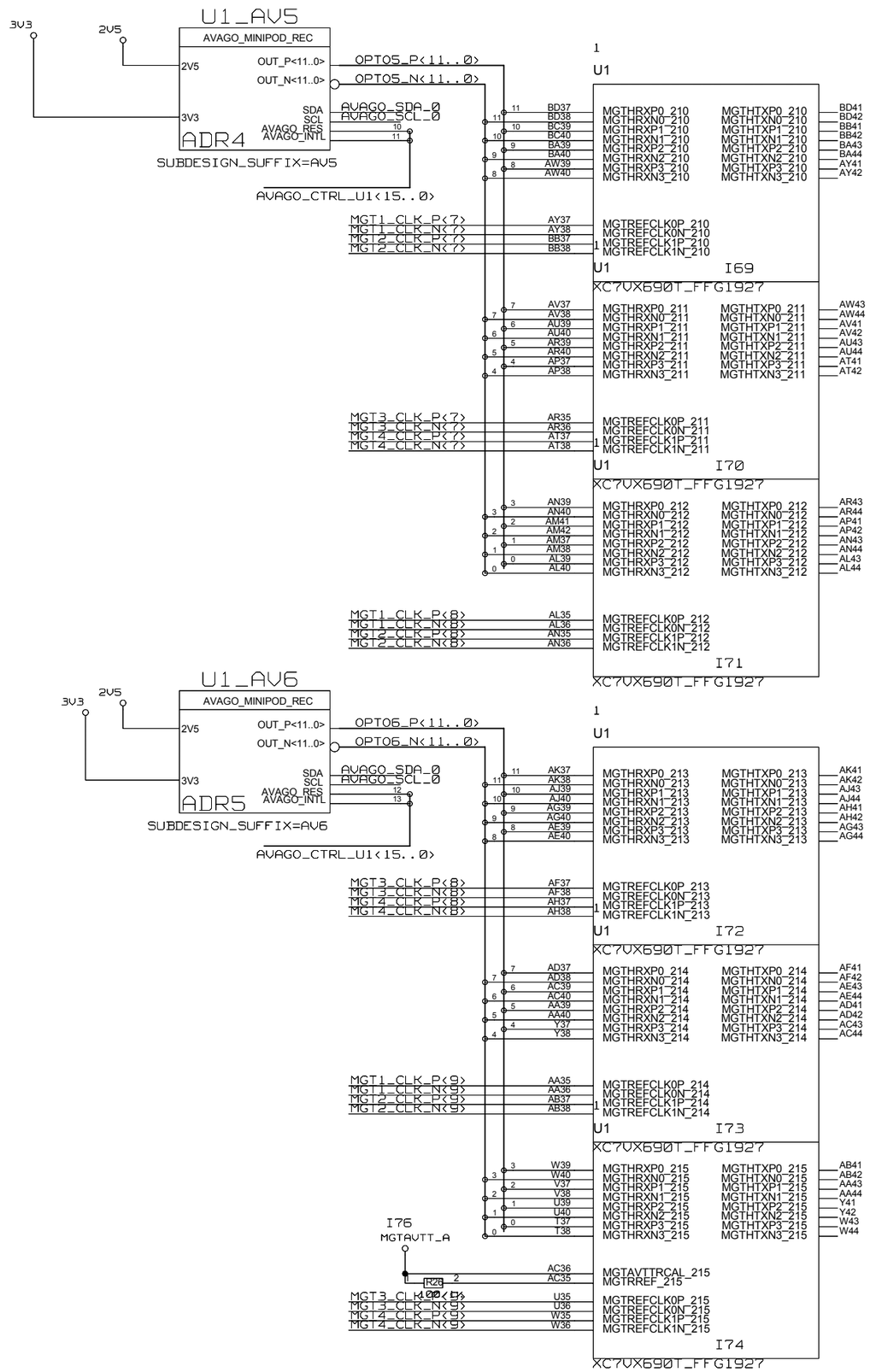

UNIVERSITY OF MAINZ

BLOCK: PROCESSOR
OPTO_IN

DRAWING TITLE: OPTO INPUT

SIZE: C

REV.

DRAWING NO.

SCALE

SHEET OF

REVISIONS				
ZONE	LTR	DESCRIPTION	DATE	APPR.

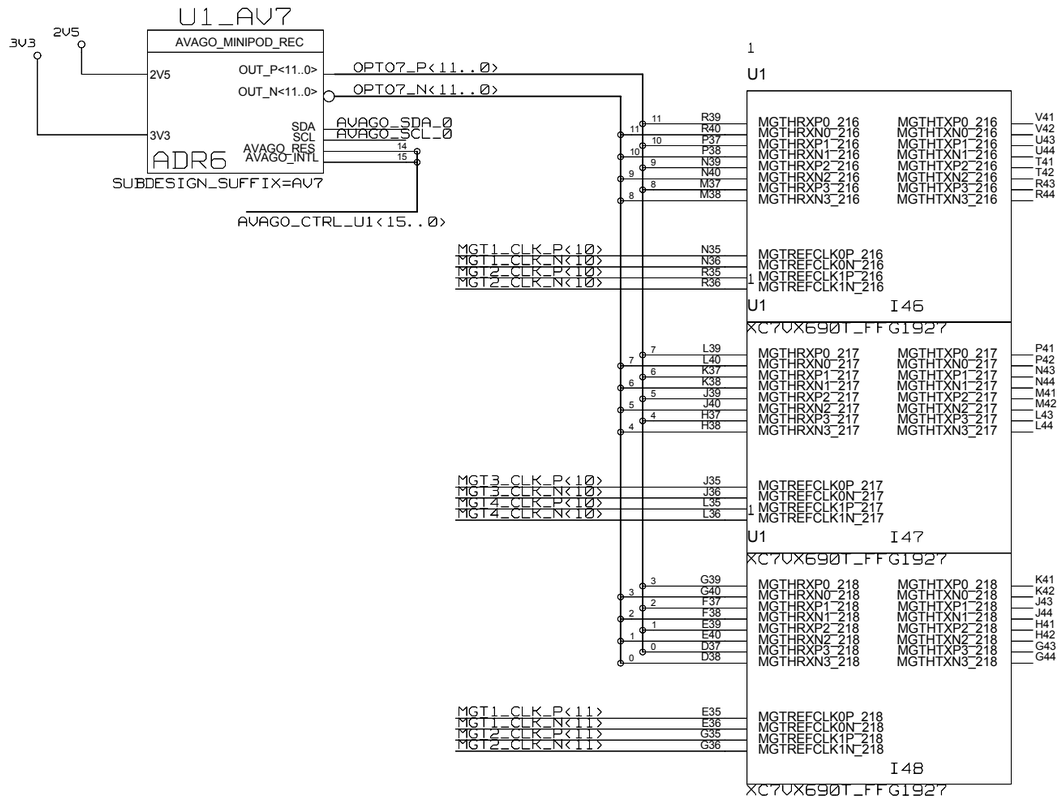

UNIVERSITY OF MAINZ	DRAWING TITLE: OPTO INPUT		
BLOCK: PROCESSOR OPTO_IN	SIZE C	REV.	DRAWING NO.
	SCALE		SHEET OF

REVISIONS				
ZONE	LTR	DESCRIPTION	DATE	APPR.

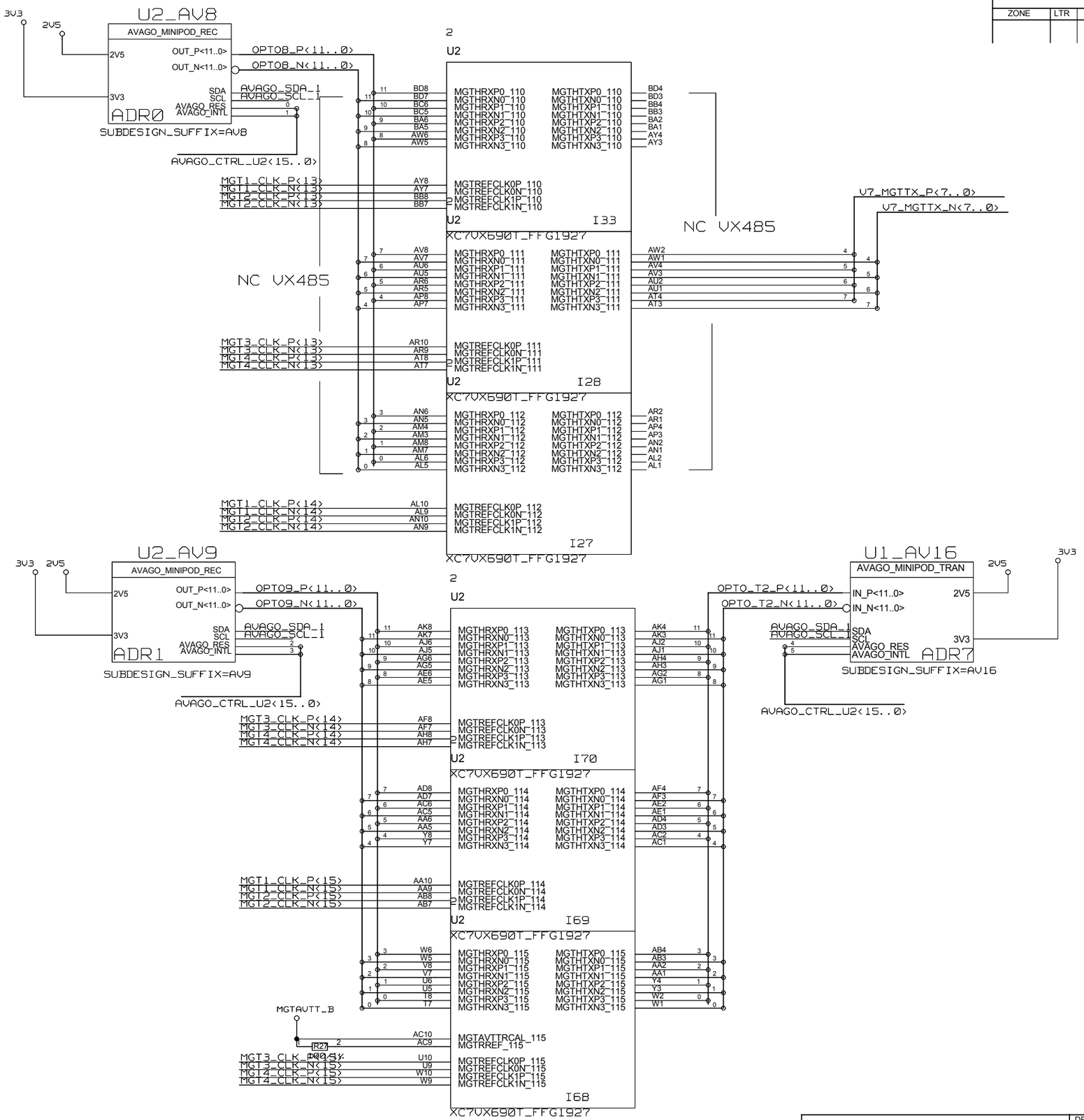

UNIVERSITY OF MAINZ

BLOCK: PROCESSOR
OPTO_IN

DRAWING TITLE: OPTO INPUT / OPTO OUTPUT B

SIZE: C | REV. | DRAWING NO.

SCALE | SHEET OF

REVISIONS				
ZONE	LTR	DESCRIPTION	DATE	APPR.

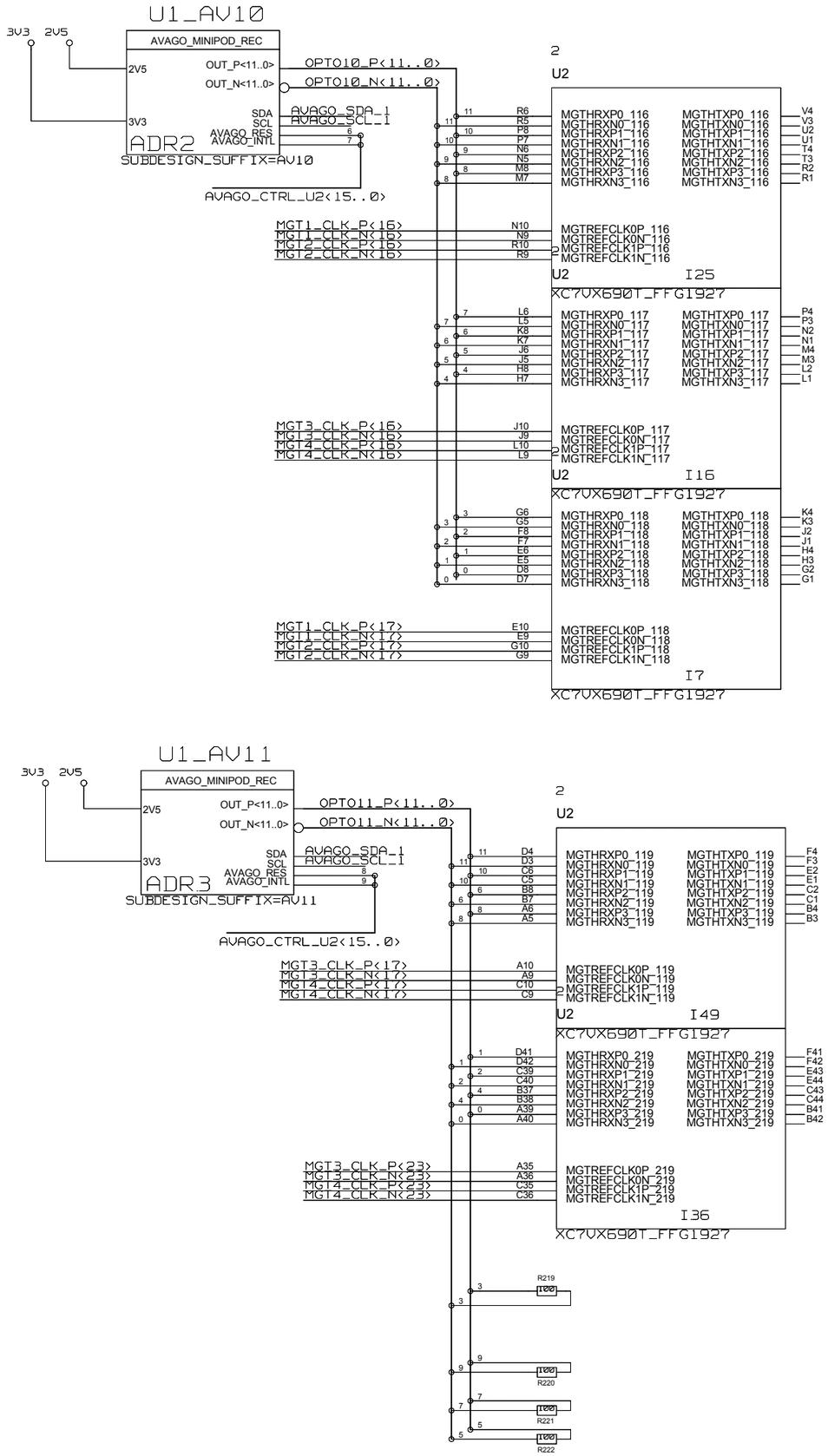

UNIVERSITY OF MAINZ	DRAWING TITLE: OPTO INPUT B
BLOCK: PROCESSOR OPTO_IN	SIZE: C; REV.; DRAWING NO.; SCALE; SHEET OF

REVISIONS				
ZONE	LTR	DESCRIPTION	DATE	APPR.

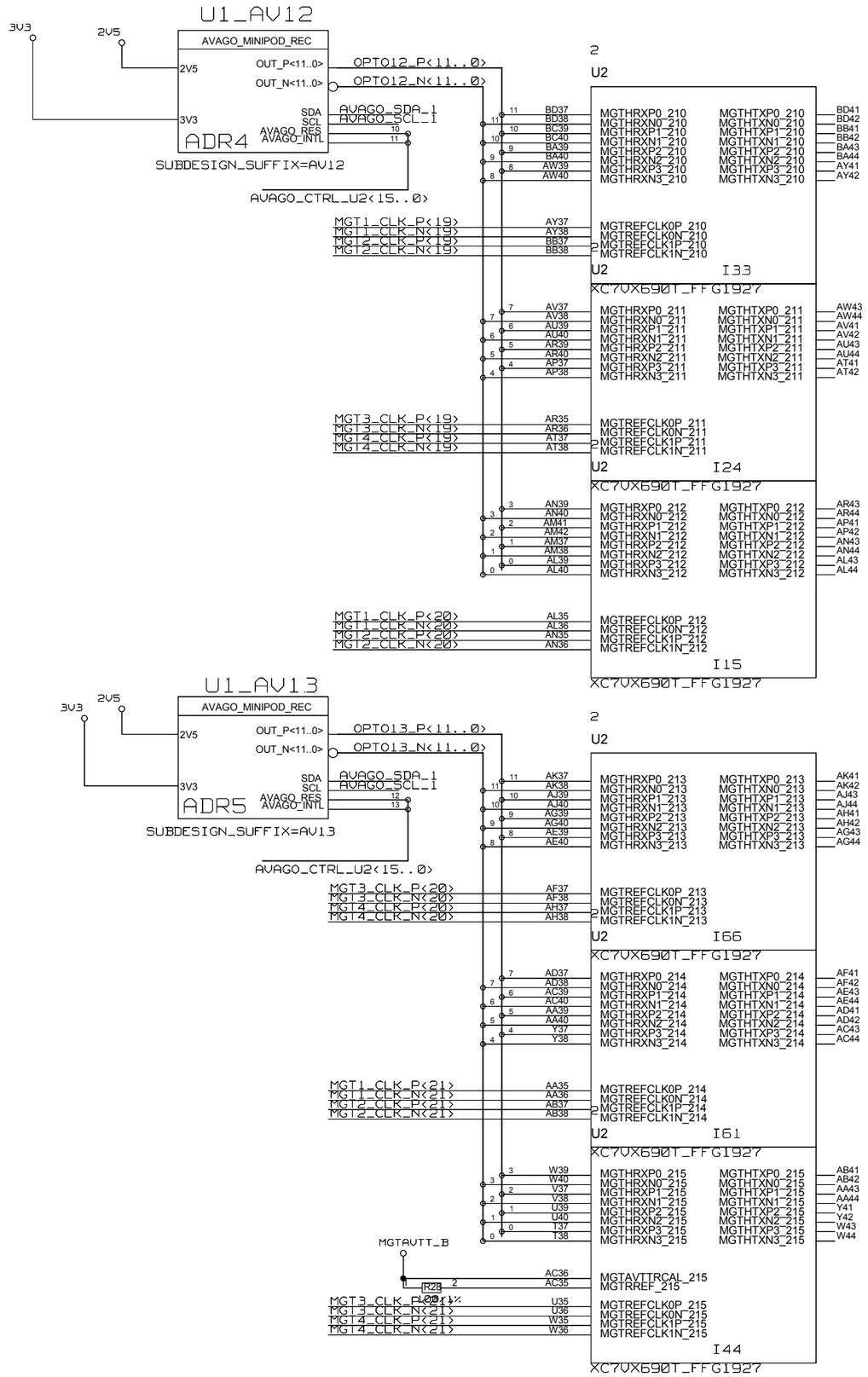

UNIVERSITY OF MAINZ

BLOCK: PROCESSOR
OPTO_IN

DRAWING TITLE: OPTO INPUT B

SIZE: C | REV. | DRAWING NO.

SCALE | SHEET OF

REVISIONS				
ZONE	LTR	DESCRIPTION	DATE	APPR.

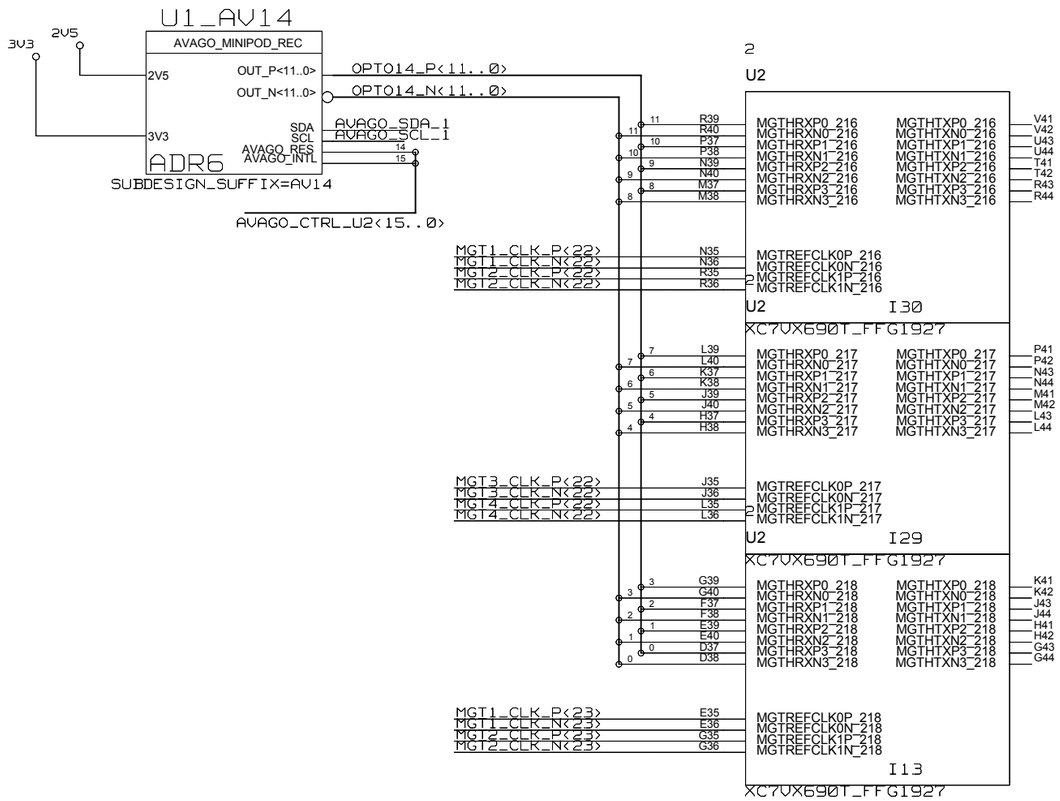

UNIVERSITY OF MAINZ

BLOCK: PROCESSOR
OPTO_IN

DRAWING TITLE: OPTO INPUT B

SIZE	REV.	DRAWING NO.
C		

SCALE | SHEET OF

REVISIONS				
ZONE	LTR	DESCRIPTION	DATE	APPR.

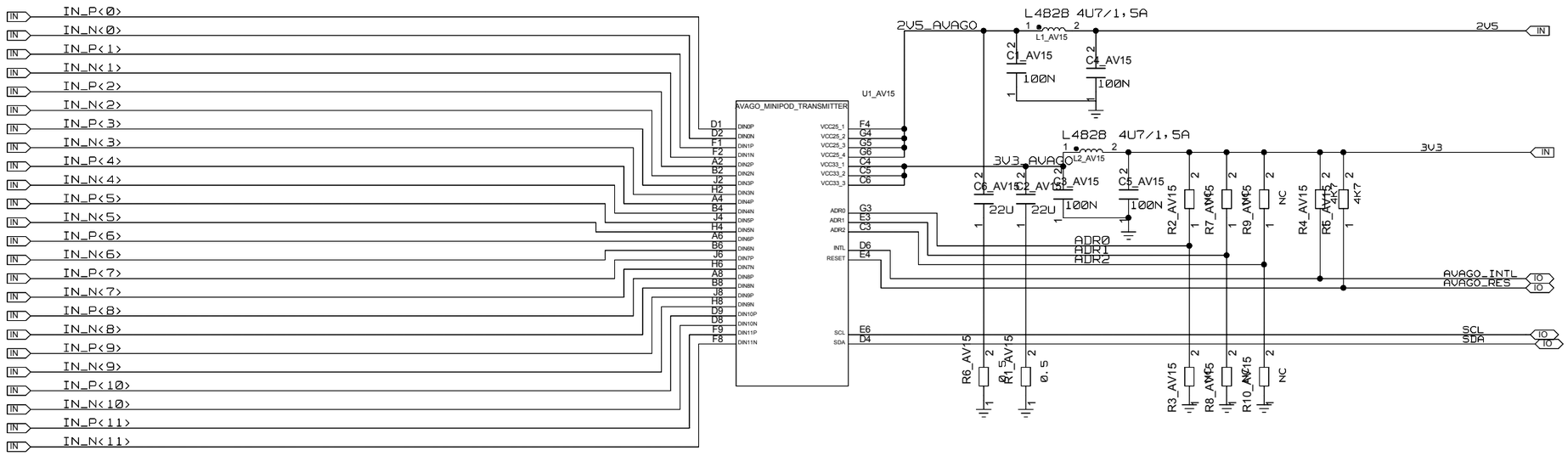

UNIVERSITY OF MAINZ

DRAWING TITLE

AVAGO TRANSMITTER

SIZE	REV.	DRAWING NO.
C		

SCALE | SHEET OF

REVISIONS				
ZONE	LTR	DESCRIPTION	DATE	APPR.

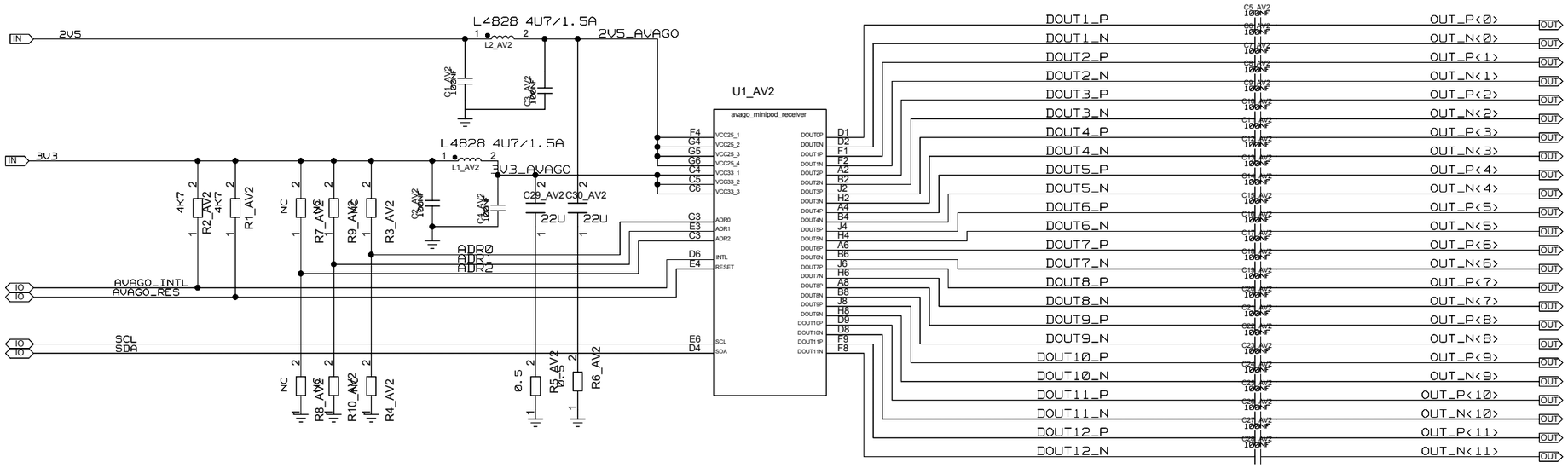

UNIVERSITY OF MAINZ

DRAWING TITLE: AVAGO RECEIVER

SIZE: C | REV. | DRAWING NO.

SCALE | SHEET OF

REVISIONS				
ZONE	LTR	DESCRIPTION	DATE	APPR.

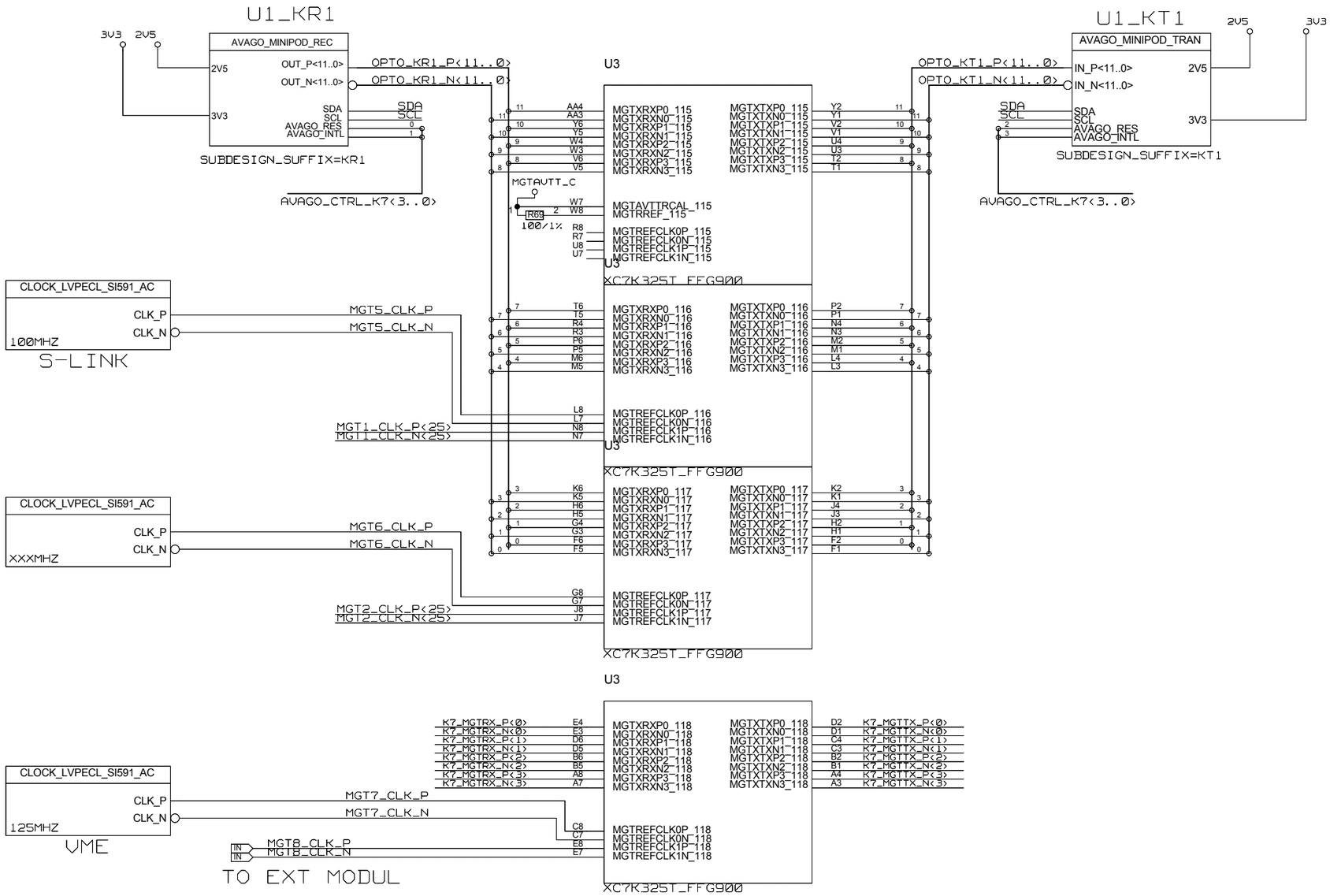

SDA
SCL

AVAGO_CTRL_K7<3..0>

K7_MGTRX_P<3..0>
K7_MGTRX_N<3..0>

K7_MGTTX_P<3..0>
K7_MGTTX_N<3..0>

MGT1_CLK_P<25..1>
MGT1_CLK_N<25..1>

MGT2_CLK_P<25..1>
MGT2_CLK_N<25..1>

UNIVERSITY OF MAINZ	DRAWING TITLE: DAQ AND ROI VME		
BLOCK: PROCESSOR KINTEX7_OPTO	SIZE C	REV.	DRAWING NO.
	SCALE		SHEET OF

REVISIONS				
ZONE	LTR	DESCRIPTION	DATE	APPR.

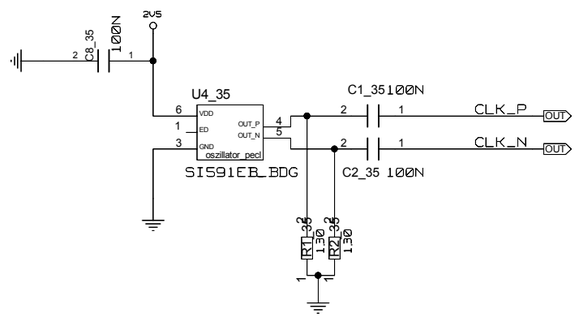

UNIVERSITY OF MAINZ	DRAWING TITLE CLOCK_LVPECL_AC		
BLOCK: CLOCK	SIZE C	REV.	DRAWING NO.
	SCALE		SHEET OF

REVISIONS				
ZONE	LTR	DESCRIPTION	DATE	APPR.

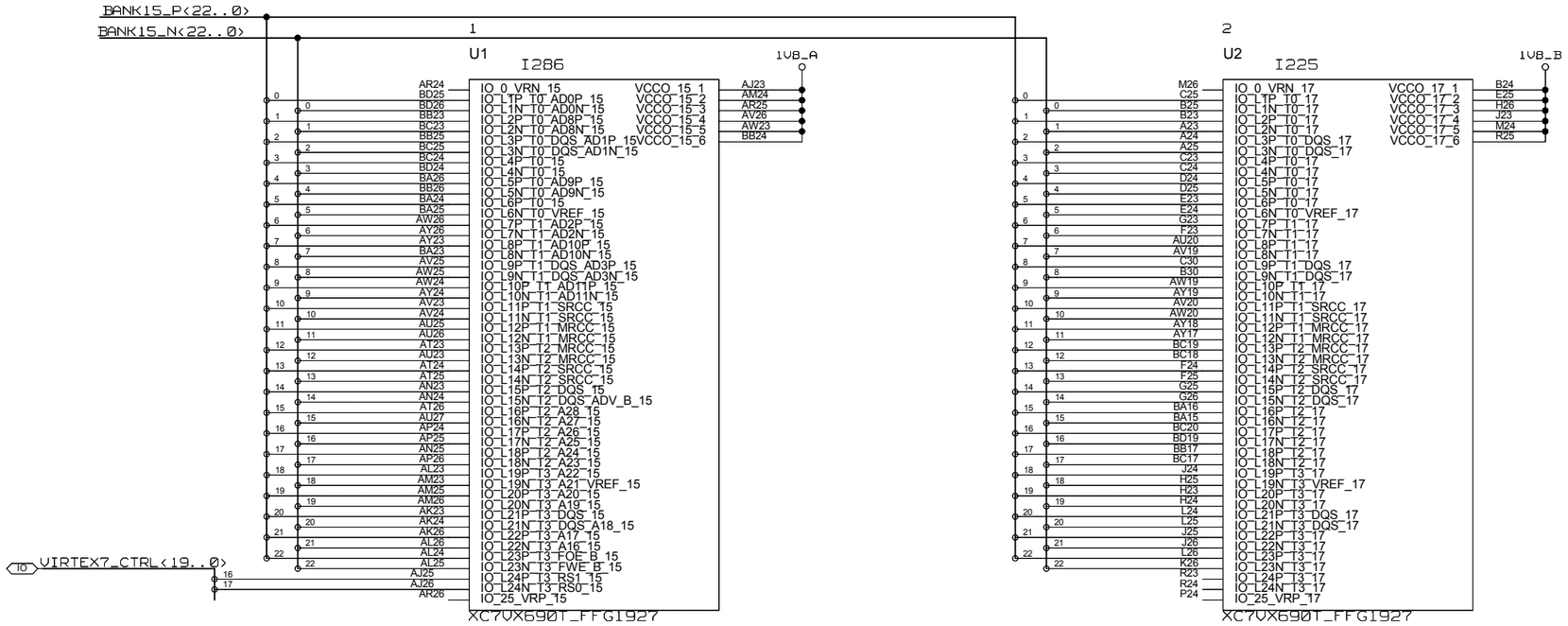

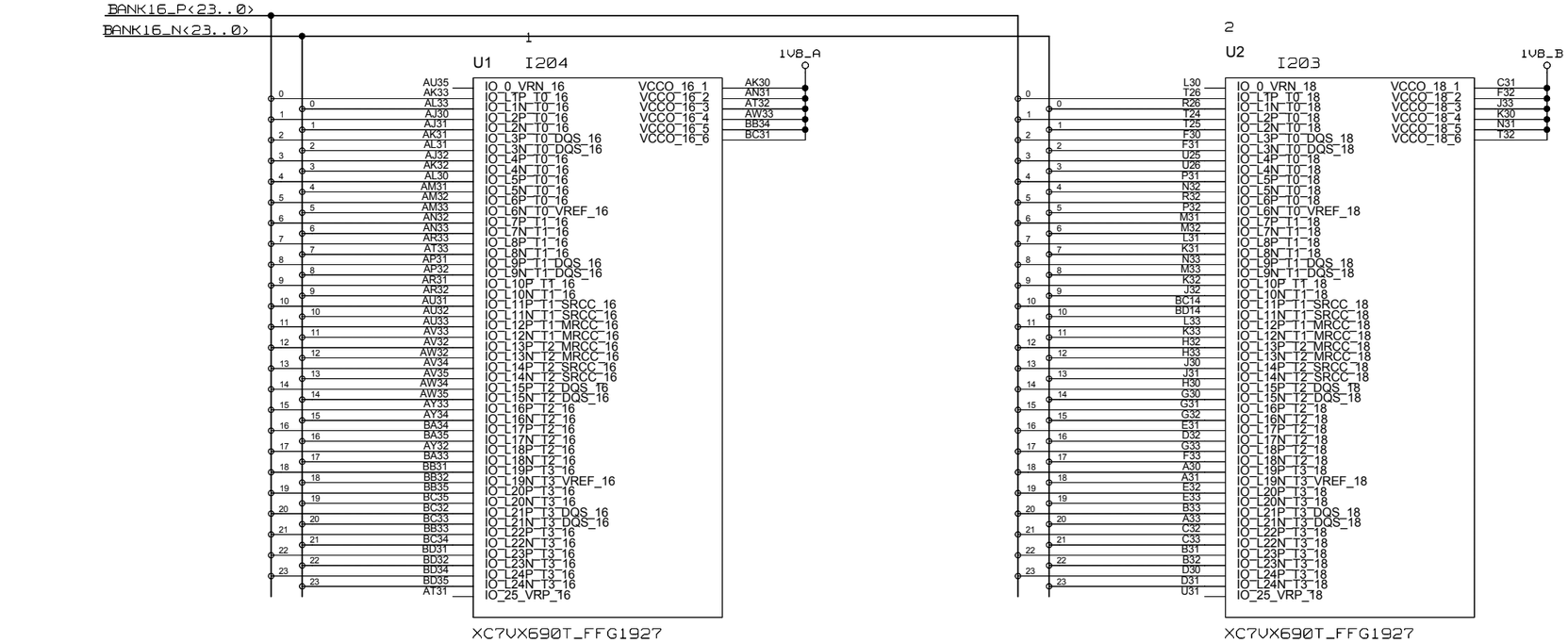

UNIVERSITY OF MAINZ

BLOCK: PROCESSOR DATA_BUS

DRAWING TITLE: DATABUS

SIZE: C | REV. | DRAWING NO.

SCALE | SHEET OF

REVISIONS				
ZONE	LTR	DESCRIPTION	DATE	APPR.

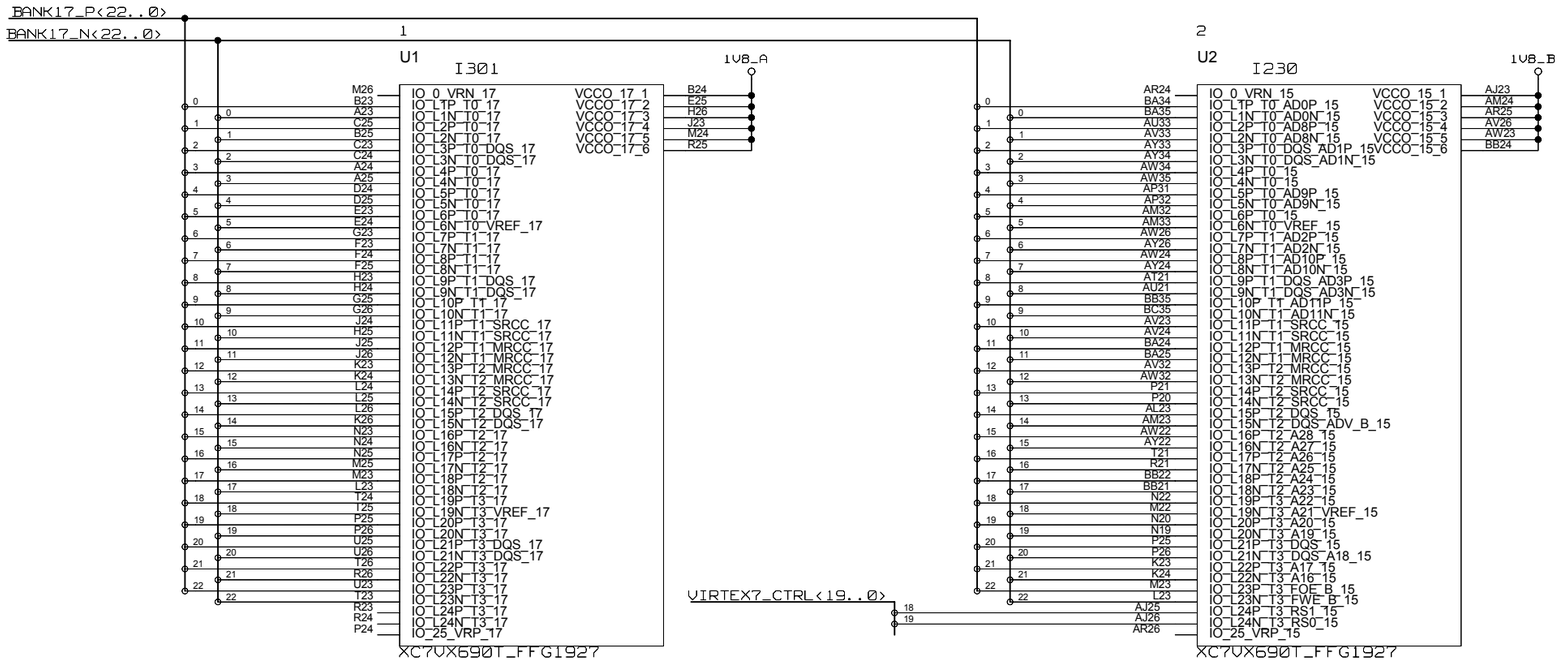

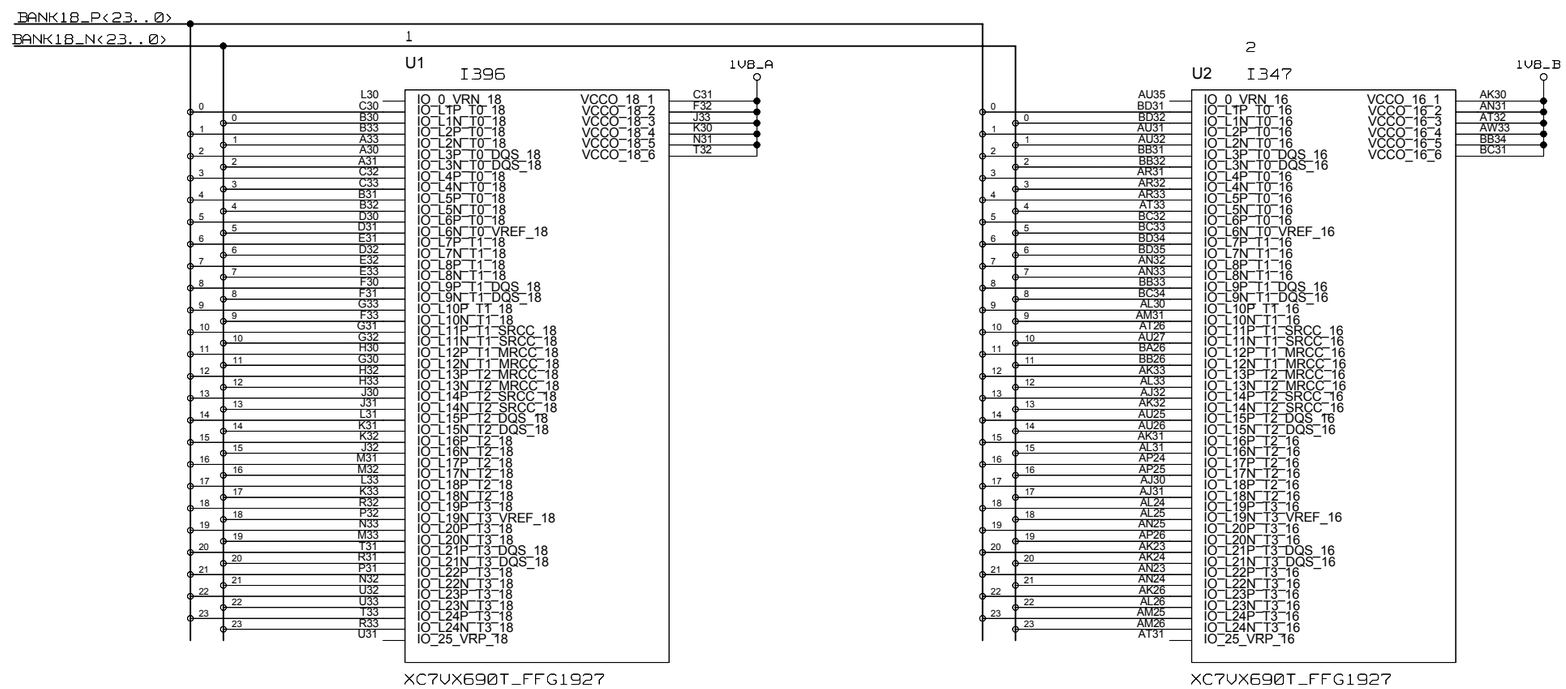

UNIVERSITY OF MAINZ

BLOCK: PROCESSOR DATA_BUS

DRAWING TITLE: DATABUS

SIZE: C | REV. | DRAWING NO.

SCALE | SHEET OF

REVISIONS				
ZONE	LTR	DESCRIPTION	DATE	APPR.

BANK34_P<23..0>
BANK34_N<23..0>

U1 — I77 — XC7VX690T_FFG1927

Pin	Signal	Pin	Signal
AP15	IO_0_VRN_34	AL17	VCCO_34_1
BA18	IO_L1P_T0_34	AP18	VCCO_34_2
BB18	IO_L1N_T0_34	AR15	VCCO_34_3
BC19	IO_L2P_T0_34	AV16	VCCO_34_4
BC18	IO_L2N_T0_34	BA17	VCCO_34_5
BB17	IO_L3P_T0_DQS_34	BD18	VCCO_34_6
BC17	IO_L3N_T0_DQS_34		
BD17	IO_L4P_T0_34		
BD16	IO_L4N_T0_34		
BC15	IO_L5P_T0_34		
BD15	IO_L5N_T0_34		
BB16	IO_L6P_T0_34		
BB15	IO_L6N_T0_VREF_34		
AW17	IO_L7P_T1_34		
AY16	IO_L7N_T1_34		
AY18	IO_L8P_T1_34		
AY17	IO_L8N_T1_34		
AW16	IO_L9P_T1_DQS_34		
AW15	IO_L9N_T1_DQS_34		
BA16	IO_L10P_T1_34		
BA15	IO_L10N_T1_34		
AV18	IO_L11P_T1_SRCC_34		
AV17	IO_L11N_T1_SRCC_34		
AU15	IO_L12P_T1_MRCC_34		
AV15	IO_L12N_T1_MRCC_34		
AT18	IO_L13P_T2_MRCC_34		
AU18	IO_L13N_T2_MRCC_34		
AU17	IO_L14P_T2_SRCC_34		
AU16	IO_L14N_T2_SRCC_34		
AP16	IO_L15P_T2_DQS_34		
AR16	IO_L15N_T2_DQS_34		
AR18	IO_L16P_T2_34		
AR17	IO_L16N_T2_34		
AT16	IO_L17P_T2_34		
AT15	IO_L17N_T2_34		
AN17	IO_L18P_T2_34		
AP17	IO_L18N_T2_34		
AM18	IO_L19P_T3_34		
AN18	IO_L19N_T3_VREF_34		
AM15	IO_L20P_T3_34		
AN15	IO_L20N_T3_34		
AK18	IO_L21P_T3_DQS_34		
AL18	IO_L21N_T3_DQS_34		
AM17	IO_L22P_T3_34		
AM16	IO_L22N_T3_34		
AJ16	IO_L23P_T3_34		
AK16	IO_L23N_T3_34		
AL16	IO_L24P_T3_34		
AL15	IO_L24N_T3_34		
AK17	IO_25_VRP_34		

1V8_A

U2 — I177 — XC7VX690T_FFG1927

Pin	Signal	Pin	Signal
K18	IO_0_VRN_39	A17	VCCO_39_1
AY14	IO_L1P_T0_39	D18	VCCO_39_2
BA14	IO_L1N_T0_39	H16	VCCO_39_3
C18	IO_L2P_T0_39	L17	VCCO_39_4
B18	IO_L2N_T0_39	P18	VCCO_39_5
D17	IO_L3P_T0_DQS_39	R15	VCCO_39_6
D16	IO_L3N_T0_DQS_39	V16	VCCO_39_7
C17	IO_L4P_T0_39		
B17	IO_L4N_T0_39		
B15	IO_L5P_T0_39		
A15	IO_L5N_T0_39		
BB12	IO_L6P_T0_39		
BC12	IO_L6N_T0_VREF_39		
AV12	IO_L7P_T1_39		
AW12	IO_L7N_T1_39		
AY13	IO_L8P_T1_39		
BA13	IO_L8N_T1_39		
G16	IO_L9P_T1_DQS_39		
F16	IO_L9N_T1_DQS_39		
BD12	IO_L10P_T1_39		
BD11	IO_L10N_T1_39		
J17	IO_L11P_T1_SRCC_39		
H17	IO_L11N_T1_SRCC_39		
H15	IO_L12P_T1_MRCC_39		
H14	IO_L12N_T1_MRCC_39		
K17	IO_L13P_T2_MRCC_39		
J16	IO_L13N_T2_MRCC_39		
B16	IO_L14P_T2_SRCC_39		
A16	IO_L14N_T2_SRCC_39		
M15	IO_L15P_T2_DQS_39		
L14	IO_L15N_T2_DQS_39		
M20	IO_L16P_T2_39		
L20	IO_L16N_T2_39		
L21	IO_L17P_T2_39		
K21	IO_L17N_T2_39		
M17	IO_L18P_T2_39		
M16	IO_L18N_T2_39		
A19	IO_L19P_T3_39		
A18	IO_L19N_T3_VREF_39		
P15	IO_L20P_T3_39		
N15	IO_L20N_T3_39		
U18	IO_L21P_T3_DQS_39		
T18	IO_L21N_T3_DQS_39		
R16	IO_L22P_T3_39		
P16	IO_L22N_T3_39		
T16	IO_L23P_T3_39		
T15	IO_L23N_T3_39		
R18	IO_L24P_T3_39		
R17	IO_L24N_T3_39		
N18	IO_25_VRP_39		

1V8_B

BANK35_P<23..0>
BANK35_N<23..0>

U1 — I301 — XC7VX690T_FFG1927

Pin	Signal	Pin	Signal
AR23	IO_0_VRN_35	AK20	VCCO_35_1
BB22	IO_L1P_T0_AD4P_35	AN21	VCCO_35_2
BB21	IO_L1N_T0_AD4N_35	AT22	VCCO_35_3
BC22	IO_L2P_T0_AD12P_35	AU19	VCCO_35_4
BD22	IO_L2N_T0_AD12N_35	AY20	VCCO_35_5
BC20	IO_L3P_T0_DQS_AD5P_35	BC21	VCCO_35_6
BD19	IO_L3N_T0_DQS_AD5N_35		
BD21	IO_L4P_T0_35		
BD20	IO_L4N_T0_35		
BA21	IO_L5P_T0_AD13P_35		
BB20	IO_L5N_T0_AD13N_35		
BA20	IO_L6P_T0_35		
BA19	IO_L6N_T0_VREF_35		
AW22	IO_L7P_T1_AD6P_35		
AY22	IO_L7N_T1_AD6N_35		
AV20	IO_L8P_T1_AD14P_35		
AW20	IO_L8N_T1_AD14N_35		
AW21	IO_L9P_T1_DQS_AD7P_35		
AY21	IO_L9N_T1_DQS_AD7N_35		
AW19	IO_L10P_T1_AD15P_35		
AY19	IO_L10N_T1_AD15N_35		
AU22	IO_L11P_T1_SRCC_35		
AV22	IO_L11N_T1_SRCC_35		
AU20	IO_L12P_T1_MRCC_35		
AV19	IO_L12N_T1_MRCC_35		
AT21	IO_L13P_T2_MRCC_35		
AU21	IO_L13N_T2_MRCC_35		
AT20	IO_L14P_T2_SRCC_35		
AT19	IO_L14N_T2_SRCC_35		
AP21	IO_L15P_T2_DQS_35		
AP20	IO_L15N_T2_DQS_35		
AR22	IO_L16P_T2_35		
AR21	IO_L16N_T2_35		
AN20	IO_L17P_T2_35		
AP19	IO_L17N_T2_35		
AN22	IO_L18P_T2_35		
AP22	IO_L18N_T2_35		
AM22	IO_L19P_T3_35		
AM21	IO_L19N_T3_VREF_35		
AJ22	IO_L20P_T3_35		
AJ21	IO_L20N_T3_35		
AM20	IO_L21P_T3_DQS_35		
AN19	IO_L21N_T3_DQS_35		
AK22	IO_L22P_T3_35		
AK21	IO_L22N_T3_35		
AL21	IO_L23P_T3_35		
AL20	IO_L23N_T3_35		
AK19	IO_L24P_T3_35		
AL19	IO_L24N_T3_35		
AK19	IO_25_VRP_35		

1V8_A

U2 — I227 — XC7VX690T_FFG1927

Pin	Signal	Pin	Signal
P19	IO_0_VRN_37	C21	VCCO_37_1
B21	IO_L1P_T0_37	F22	VCCO_37_2
A21	IO_L1N_T0_37	G19	VCCO_37_3
C22	IO_L2P_T0_37	K20	VCCO_37_4
B22	IO_L2N_T0_37	N21	VCCO_37_5
D19	IO_L3P_T0_DQS_37	T22	VCCO_37_6
C19	IO_L3N_T0_DQS_37	U19	VCCO_37_7
D20	IO_L4P_T0_37		
C20	IO_L4N_T0_37		
AT18	IO_L5P_T0_37		
AU18	IO_L5N_T0_37		
AV18	IO_L6P_T0_37		
AV17	IO_L6N_T0_VREF_37		
AM20	IO_L7P_T1_37		
AN19	IO_L7N_T1_37		
J19	IO_L8P_T1_37		
H19	IO_L8N_T1_37		
B20	IO_L9P_T1_DQS_37		
A20	IO_L9N_T1_DQS_37		
G18	IO_L10P_T1_37		
F18	IO_L10N_T1_37		
AN20	IO_L11P_T1_SRCC_37		
AP19	IO_L11N_T1_SRCC_37		
H20	IO_L12P_T1_MRCC_37		
G20	IO_L12N_T1_MRCC_37		
D22	IO_L13P_T2_MRCC_37		
D21	IO_L13N_T2_MRCC_37		
E22	IO_L14P_T2_SRCC_37		
E21	IO_L14N_T2_SRCC_37		
G21	IO_L15P_T2_DQS_37		
F21	IO_L15N_T2_DQS_37		
H22	IO_L16P_T2_37		
G22	IO_L16N_T2_37		
F20	IO_L17P_T2_37		
F19	IO_L17N_T2_37		
N25	IO_L18P_T2_37		
M25	IO_L18N_T2_37		
N23	IO_L19P_T3_37		
N24	IO_L19N_T3_VREF_37		
R22	IO_L20P_T3_37		
P22	IO_L20N_T3_37		
U32	IO_L21P_T3_DQS_37		
U33	IO_L21N_T3_DQS_37		
T33	IO_L22P_T3_37		
R33	IO_L22N_T3_37		
BC15	IO_L23P_T3_37		
BD15	IO_L23N_T3_37		
T19	IO_L24P_T3_37		
R19	IO_L24N_T3_37		
M21	IO_25_VRP_37		

1V8_B

UNIVERSITY OF MAINZ

BLOCK: PROCESSOR DATA_BUS

DRAWING TITLE: DATABUS

SIZE: C | REV. | DRAWING NO.

SCALE | SHEET OF

REVISIONS				
ZONE	LTR	DESCRIPTION	DATE	APPR.

BANK36_P<23..0>
BANK36_N<23..0>

U1 I93 — XC7VX690T_FFG1927

Pin	Net	Pin	Net
AP12	IO_0_VRN_36	AJ13	VCCO_36_1
AJ14	IO_L1P_T0_36	AM14	VCCO_36_2
AK14	IO_L1N_T0_36	A112	VCCO_36_3
AM13	IO_L2P_T0_36	AW13	VCCO_36_4
AM12	IO_L2N_T0_36	AY10	VCCO_36_5
AK13	IO_L3P_T0_DQS_36	BB14	VCCO_36_6
AK12	IO_L3N_T0_DQS_36	BC11	VCCO_36_7
AN13	IO_L4P_T0_36		
AN12	IO_L4N_T0_36		
AL14	IO_L5P_T0_36		
AL13	IO_L5N_T0_36		
AN14	IO_L6P_T0_36		
AP14	IO_L6N_T0_VREF_36		
AR13	IO_L7P_T1_36		
AR12	IO_L7N_T1_36		
AU12	IO_L8P_T1_36		
AU11	IO_L8N_T1_36		
AT14	IO_L9P_T1_DQS_36		
AT13	IO_L9N_T1_DQS_36		
AU10	IO_L10P_T1_36		
AV10	IO_L10N_T1_36		
AV12	IO_L11P_T1_SRCC_36		
AW12	IO_L11N_T1_SRCC_36		
AU13	IO_L12P_T1_MRCC_36		
AV13	IO_L12N_T1_MRCC_36		
AV14	IO_L13P_T2_MRCC_36		
AW14	IO_L13N_T2_MRCC_36		
AW11	IO_L14P_T2_SRCC_36		
AW10	IO_L14N_T2_SRCC_36		
AY13	IO_L15P_T2_DQS_36		
BA13	IO_L15N_T2_DQS_36		
AY12	IO_L16P_T2_36		
AY11	IO_L16N_T2_36		
BA11	IO_L17P_T2_36		
BA10	IO_L17N_T2_36		
AY14	IO_L18P_T2_36		
BA14	IO_L18N_T2_36		
BB11	IO_L19P_T3_36		
BB10	IO_L19N_T3_VREF_36		
BB12	IO_L20P_T3_36		
BC12	IO_L20N_T3_36		
BD12	IO_L21P_T3_DQS_36		
BD11	IO_L21N_T3_DQS_36		
BB13	IO_L22P_T3_36		
BC13	IO_L22N_T3_36		
BC14	IO_L23P_T3_36		
BD14	IO_L23N_T3_36		
BC10	IO_L24P_T3_36		
BD10	IO_L24N_T3_36		
AR14	IO_25_VRP_36		

1VB_A

U2 I101 — XC7VX690T_FFG1927

Pin	Net	Pin	Net
L15	IO_0_VRN_38	B14	VCCO_38_1
U13	IO_L1P_T0_38	E15	VCCO_38_2
T13	IO_L1N_T0_38	F12	VCCO_38_3
R14	IO_L2P_T0_38	J13	VCCO_38_4
P14	IO_L2N_T0_38	M14	VCCO_38_5
V15	IO_L3P_T0_DQS_38	T12	VCCO_38_6
U15	IO_L3N_T0_DQS_38		
R12	IO_L4P_T0_38		
P12	IO_L4N_T0_38		
U17	IO_L5P_T0_38		
U16	IO_L5N_T0_38		
N14	IO_L6P_T0_38		
N13	IO_L6N_T0_VREF_38		
N12	IO_L7P_T1_38		
M12	IO_L7N_T1_38		
K14	IO_L8P_T1_38		
K13	IO_L8N_T1_38		
M13	IO_L9P_T1_DQS_38		
L13	IO_L9N_T1_DQS_38		
K12	IO_L10P_T1_38		
J12	IO_L10N_T1_38		
H13	IO_L11P_T1_SRCC_38		
G13	IO_L11N_T1_SRCC_38		
E12	IO_L12P_T1_MRCC_38		
D12	IO_L12N_T1_MRCC_38		
J15	IO_L13P_T2_MRCC_38		
J14	IO_L13N_T2_MRCC_38		
H12	IO_L14P_T2_SRCC_38		
G12	IO_L14N_T2_SRCC_38		
G15	IO_L15P_T2_DQS_38		
F15	IO_L15N_T2_DQS_38		
F14	IO_L16P_T2_38		
F13	IO_L16N_T2_38		
E19	IO_L17P_T2_38		
E18	IO_L17N_T2_38		
BC10	IO_L18P_T2_38		
BD10	IO_L18N_T2_38		
E17	IO_L19P_T3_38		
E16	IO_L19N_T3_VREF_38		
B13	IO_L20P_T3_38		
B12	IO_L20N_T3_38		
C13	IO_L21P_T3_DQS_38		
C12	IO_L21N_T3_DQS_38		
A14	IO_L22P_T3_38		
A13	IO_L22N_T3_38		
C15	IO_L23P_T3_38		
C14	IO_L23N_T3_38		
D15	IO_L24P_T3_38		
D14	IO_L24N_T3_38		
U12	IO_25_VRP_38		

1VB_B

BANK37_P<23..0>
BANK37_N<23..0>

U1 I183 — XC7VX690T_FFG1927

Pin	Net	Pin	Net
P19	IO_0_VRN_37	C21	VCCO_37_1
B21	IO_L1P_T0_37	F22	VCCO_37_2
A21	IO_L1N_T0_37	G19	VCCO_37_3
B20	IO_L2P_T0_37	K20	VCCO_37_4
A20	IO_L2N_T0_37	N21	VCCO_37_5
C22	IO_L3P_T0_DQS_37	T22	VCCO_37_6
B22	IO_L3N_T0_DQS_37	U19	VCCO_37_7
D20	IO_L4P_T0_37		
C20	IO_L4N_T0_37		
D22	IO_L5P_T0_37		
D21	IO_L5N_T0_37		
E22	IO_L6P_T0_37		
E21	IO_L6N_T0_VREF_37		
G21	IO_L7P_T1_37		
F21	IO_L7N_T1_37		
F20	IO_L8P_T1_37		
F19	IO_L8N_T1_37		
H22	IO_L9P_T1_DQS_37		
G22	IO_L9N_T1_DQS_37		
J19	IO_L10P_T1_37		
H19	IO_L10N_T1_37		
J21	IO_L11P_T1_SRCC_37		
J20	IO_L11N_T1_SRCC_37		
H20	IO_L12P_T1_MRCC_37		
G20	IO_L12N_T1_MRCC_37		
K22	IO_L13P_T2_MRCC_37		
J22	IO_L13N_T2_MRCC_37		
L21	IO_L14P_T2_SRCC_37		
K21	IO_L14N_T2_SRCC_37		
L19	IO_L15P_T2_DQS_37		
K19	IO_L15N_T2_DQS_37		
M20	IO_L16P_T2_37		
L20	IO_L16N_T2_37		
N20	IO_L17P_T2_37		
N19	IO_L17N_T2_37		
N22	IO_L18P_T2_37		
M22	IO_L18N_T2_37		
U20	IO_L19P_T3_37		
T20	IO_L19N_T3_VREF_37		
T19	IO_L20P_T3_37		
R19	IO_L20N_T3_37		
U22	IO_L21P_T3_DQS_37		
U21	IO_L21N_T3_DQS_37		
P21	IO_L22P_T3_37		
P20	IO_L22N_T3_37		
R22	IO_L23P_T3_37		
P22	IO_L23N_T3_37		
T21	IO_L24P_T3_37		
R21	IO_L24N_T3_37		
M21	IO_25_VRP_37		

1VB_A

U2 I123 — XC7VX690T_FFG1927

Pin	Net	Pin	Net
AR23	IO_0_VRN_35	AK20	VCCO_35_1
AM13	IO_L1P_T0_AD4P_35	AN21	VCCO_35_2
AM12	IO_L1N_T0_AD4N_35	AT22	VCCO_35_3
AT16	IO_L2P_T0_AD12P_35	AU19	VCCO_35_4
AT15	IO_L2N_T0_AD12N_35	AY20	VCCO_35_5
AN13	IO_L3P_T0_DQS_AD5P_35	BC21	VCCO_35_6
AN12	IO_L3N_T0_DQS_AD5N_35		
AW16	IO_L4P_T0_35		
AW15	IO_L4N_T0_35		
AY12	IO_L5P_T0_AD13P_35		
AY11	IO_L5N_T0_AD13N_35		
AY32	IO_L6P_T0_35		
BA33	IO_L6N_T0_VREF_35		
AV25	IO_L7P_T1_AD6P_35		
AW25	IO_L7N_T1_AD6N_35		
AV34	IO_L8P_T1_AD14P_35		
AV35	IO_L8N_T1_AD14N_35		
AT24	IO_L9P_T1_DQS_AD7P_35		
AT25	IO_L9N_T1_DQS_AD7N_35		
AT23	IO_L10P_T1_AD15P_35		
AU23	IO_L10N_T1_AD15N_35		
AN17	IO_L11P_T1_SRCC_35		
AP17	IO_L11N_T1_SRCC_35		
AR18	IO_L12P_T1_MRCC_35		
AR17	IO_L12N_T1_MRCC_35		
U22	IO_L13P_T2_MRCC_35		
U21	IO_L13N_T2_MRCC_35		
T31	IO_L14P_T2_SRCC_35		
R31	IO_L14N_T2_SRCC_35		
AT20	IO_L15P_T2_DQS_35		
AT19	IO_L15N_T2_DQS_35		
AP21	IO_L16P_T2_35		
AP20	IO_L16N_T2_35		
AN22	IO_L17P_T2_35		
AP22	IO_L17N_T2_35		
U23	IO_L18P_T2_35		
T23	IO_L18N_T2_35		
BA20	IO_L19P_T3_35		
BA19	IO_L19N_T3_VREF_35		
BA18	IO_L20P_T3_35		
BB18	IO_L20N_T3_35		
J21	IO_L21P_T3_DQS_35		
J20	IO_L21N_T3_DQS_35		
U20	IO_L22P_T3_35		
T20	IO_L22N_T3_35		
K22	IO_L23P_T3_35		
J22	IO_L23N_T3_35		
BA21	IO_L24P_T3_35		
BB20	IO_L24N_T3_35		
AR19	IO_25_VRP_35		

1VB_B

UNIVERSITY OF MAINZ

BLOCK: PROCESSOR DATA_BUS

DRAWING TITLE: DATABUS

SIZE: C | REV. | DRAWING NO.

SCALE | SHEET OF

REVISIONS				
ZONE	LTR	DESCRIPTION	DATE	APPR.

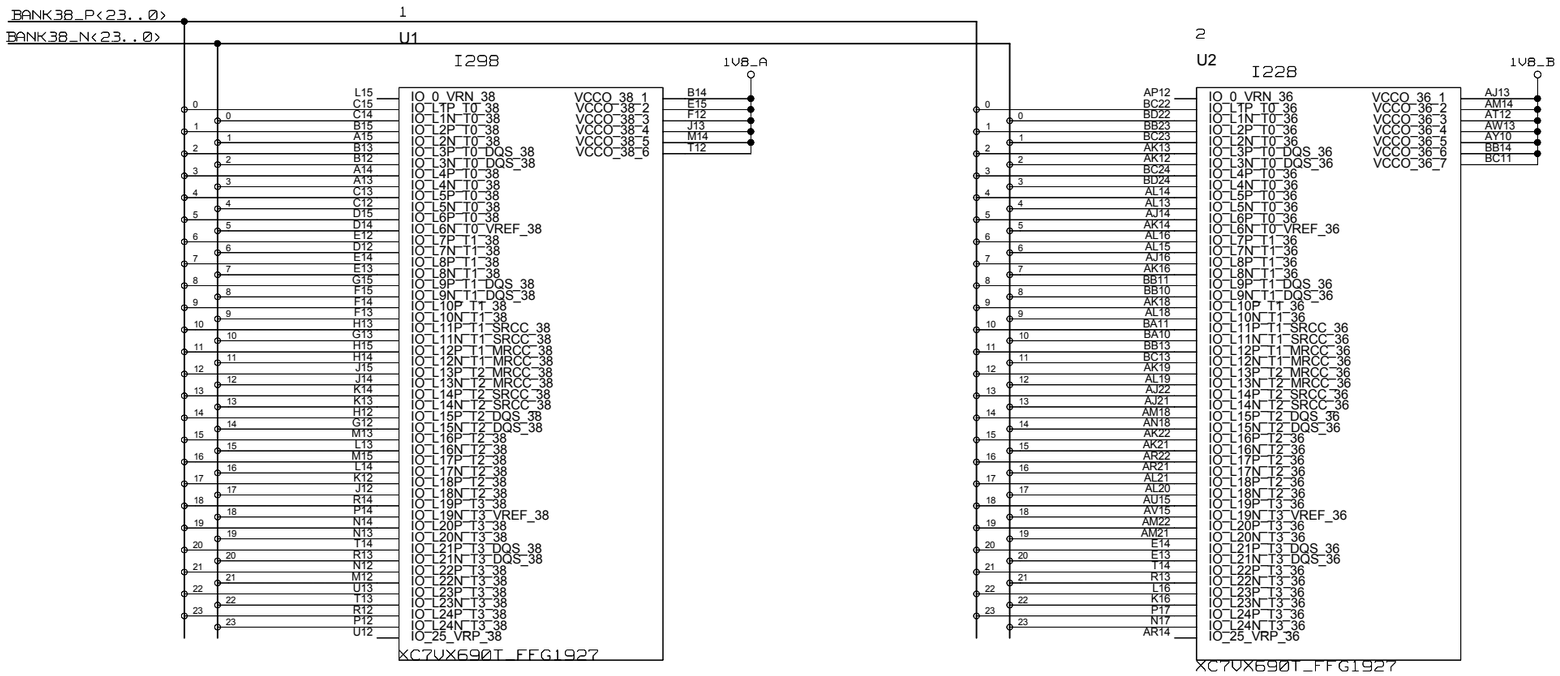

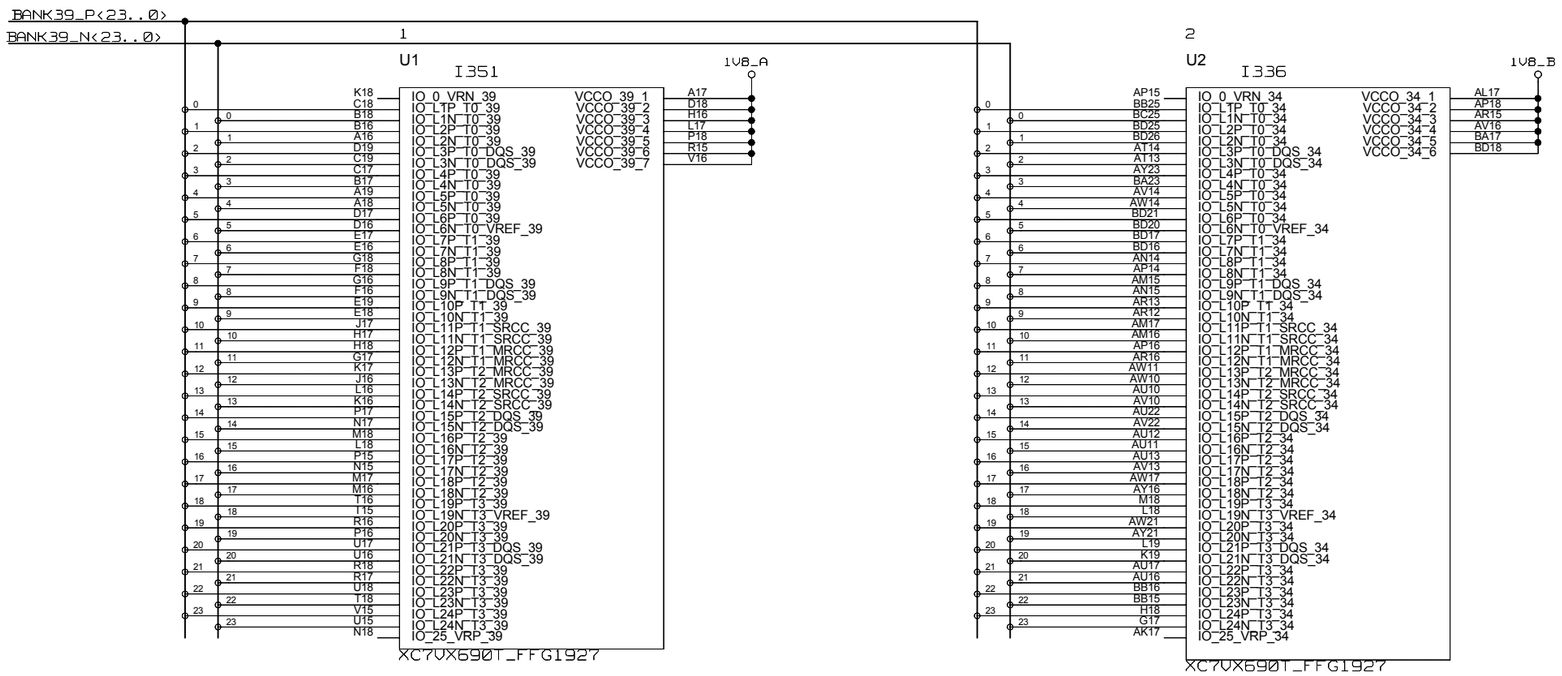

UNIVERSITY OF MAINZ

BLOCK: PROCESSOR DATA_BUS

DRAWING TITLE: DATABUS

SIZE: C

REV.

DRAWING NO.

SCALE

SHEET OF

REVISIONS				
ZONE	LTR	DESCRIPTION	DATE	APPR.

PTH08T220W	3V3	1K21
PTH08T220W	2V5	2K37
PTH08T220W	1V0	20K5
PTH08T240W	1V0	20K5
PTH08T240W	1V2	12K1
SIL20C2	1V0	2K87
SIL20C2	1V8	976R
LDO06C	1V0	2K87
LDO06C	1V2	1K96
LDO06C	3V3	436R
LDO06C	5V0	270R
TPS74401	1V8	3K57/2K87

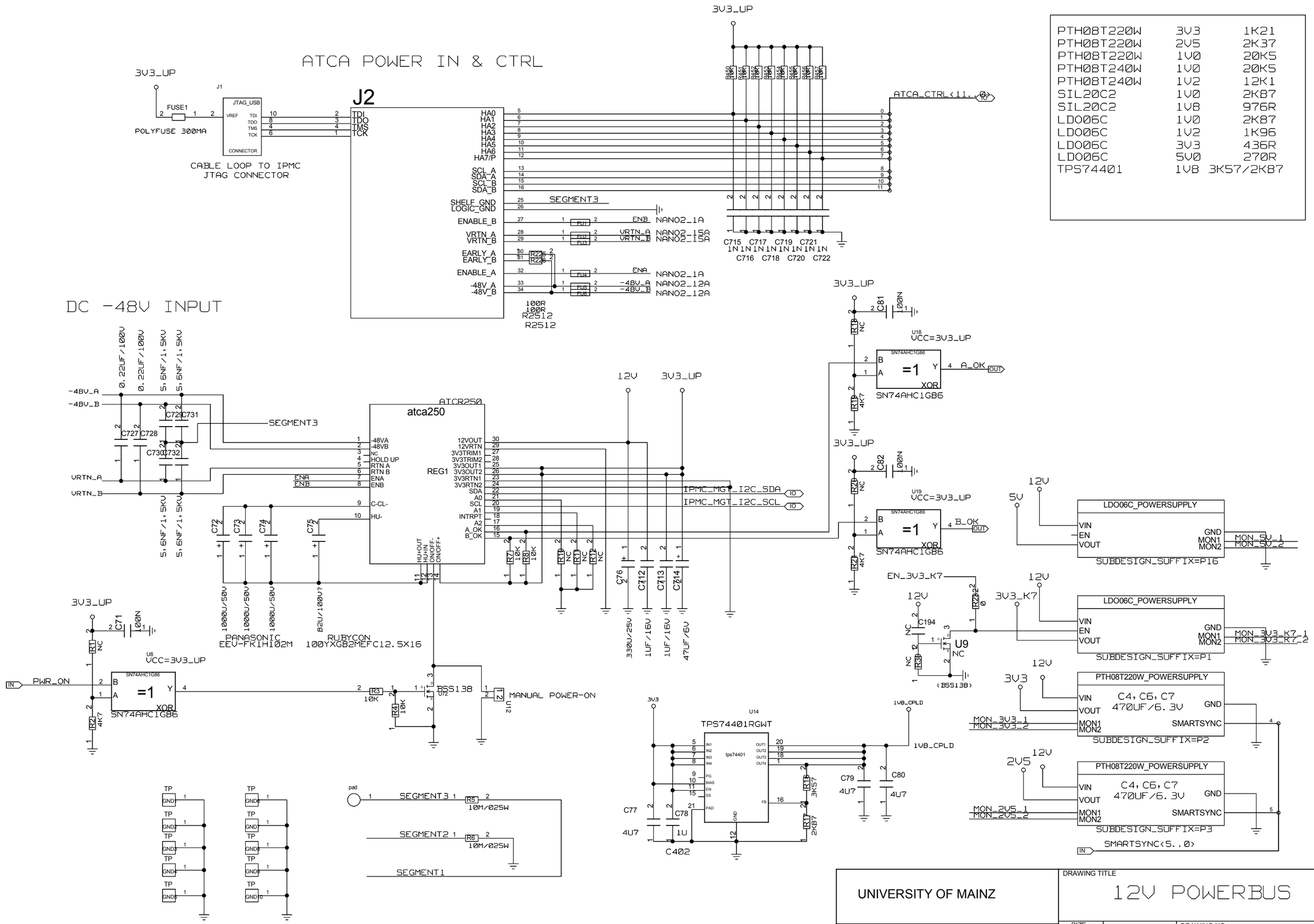

UNIVERSITY OF MAINZ

BLOCK: POWERSUPPLY

DRAWING TITLE: 12V POWERBUS

SIZE: C

REV.: 02.06.2014

DRAWING NO.

SCALE

SHEET OF

REVISIONS				
ZONE	LTR	DESCRIPTION	DATE	APPR.

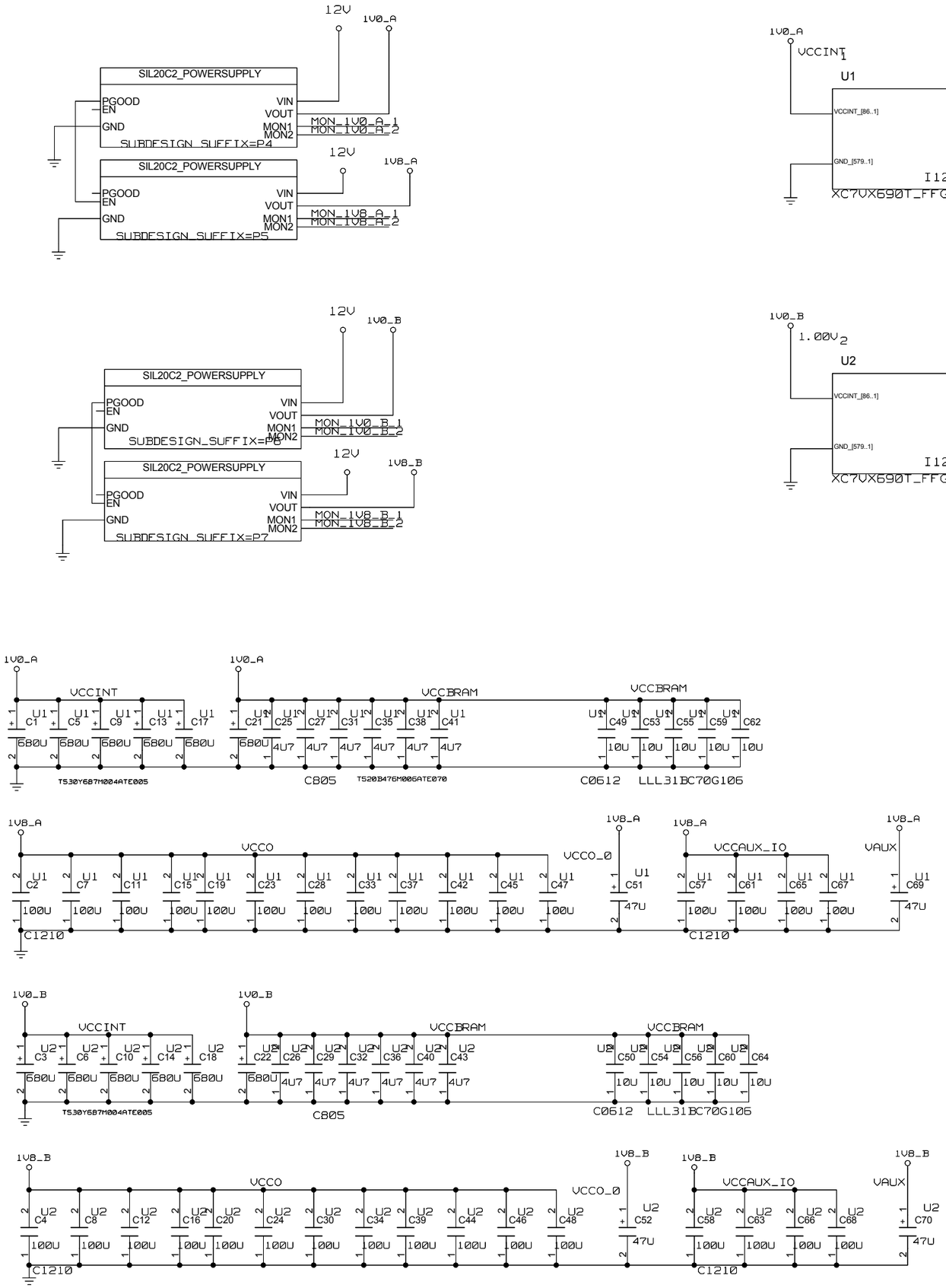

UNIVERSITY OF MAINZ	DRAWING TITLE: POWER VIRTEX7		
BLOCK: POWERSUPPLY	SIZE: C	REV.	DRAWING NO.
	SCALE		SHEET OF

REVISIONS				
ZONE	LTR	DESCRIPTION	DATE	APPR.

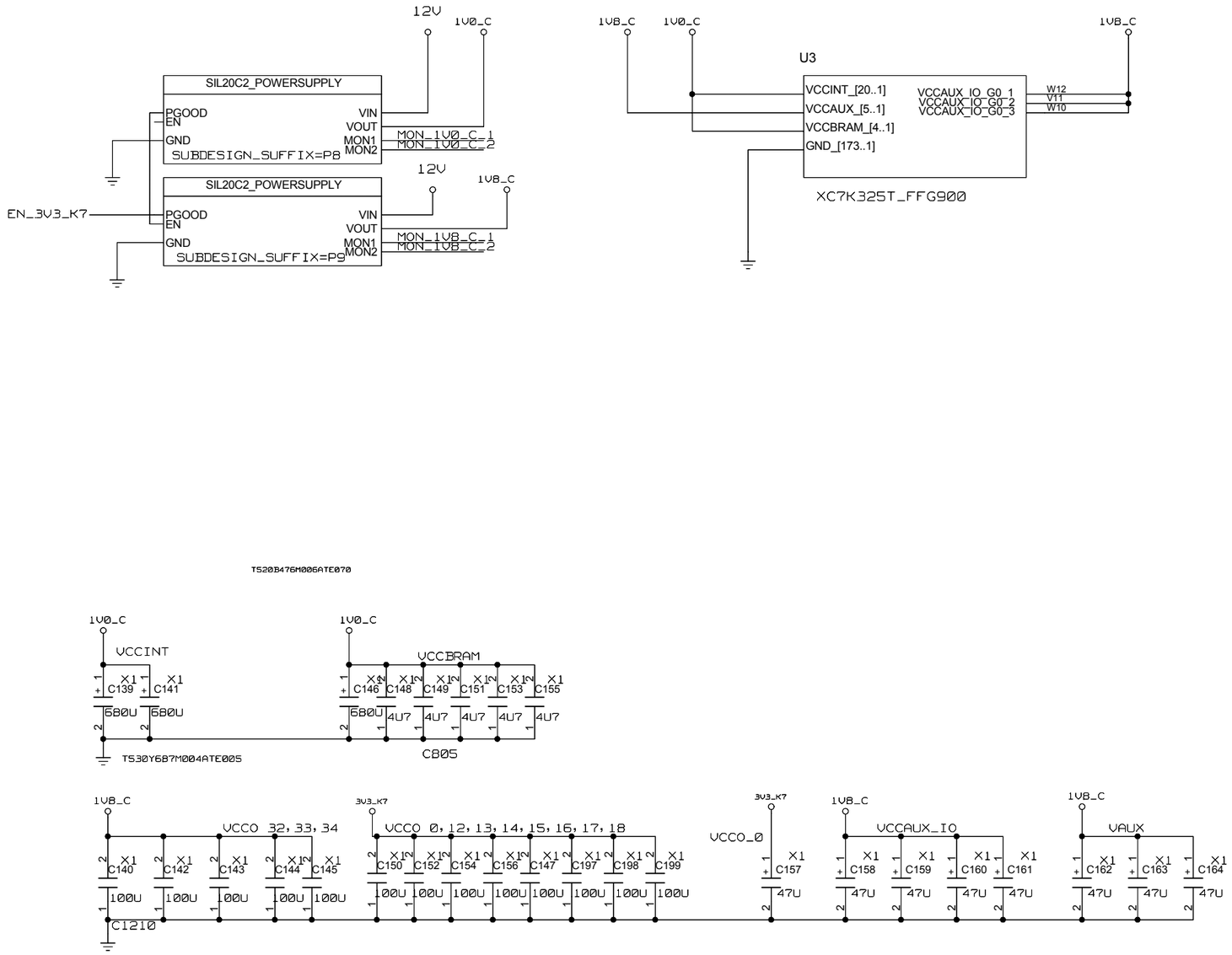

UNIVERSITY OF MAINZ	DRAWING TITLE POWER KINTEX7		
BLOCK: POWERSUPPLY	SIZE C	REV.	DRAWING NO.
	SCALE		SHEET OF

REVISIONS				
ZONE	LTR	DESCRIPTION	DATE	APPR.

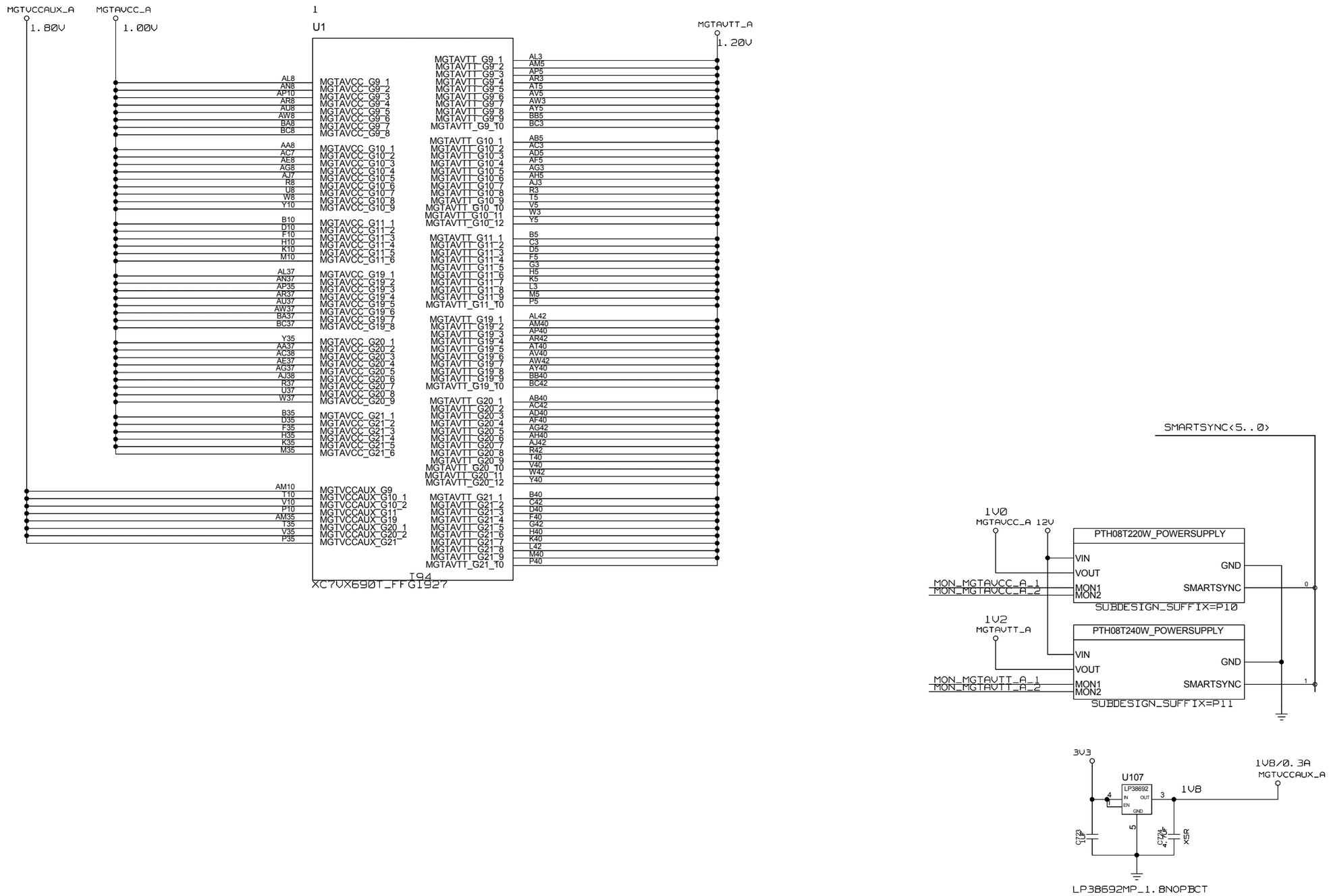

UNIVERSITY OF MAINZ

BLOCK: POWERSUPPLY

DRAWING TITLE: VIRTEX7 MGT POWER

SIZE: C | REV. | DRAWING NO.

SCALE | SHEET OF

REVISIONS				
ZONE	LTR	DESCRIPTION	DATE	APPR.

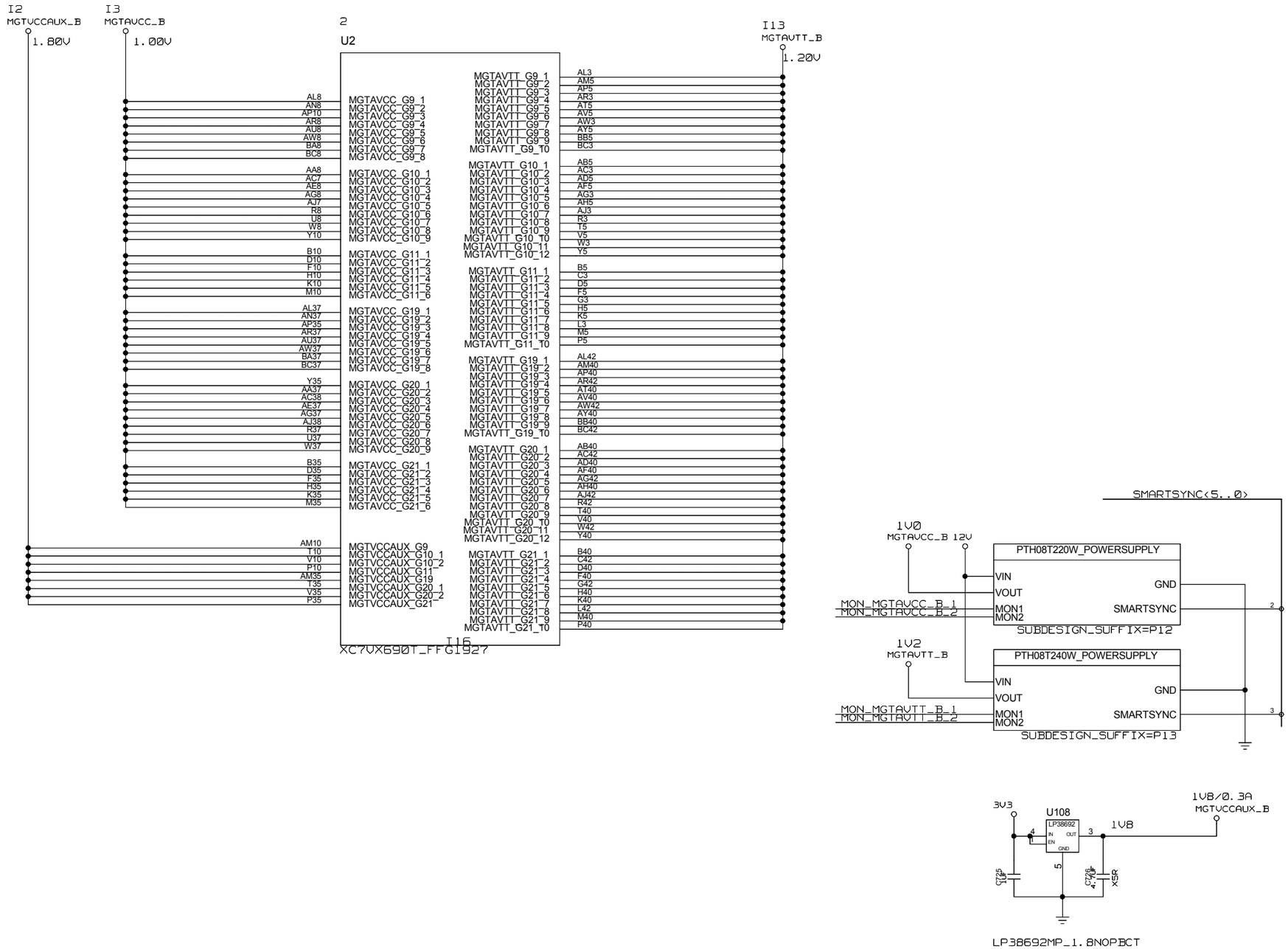

UNIVERSITY OF MAINZ	DRAWING TITLE: VIRTEX7 MGT POWER		
BLOCK: POWERSUPPLY	SIZE: C	REV.	DRAWING NO.
	SCALE		SHEET OF

REVISIONS				
ZONE	LTR	DESCRIPTION	DATE	APPR.

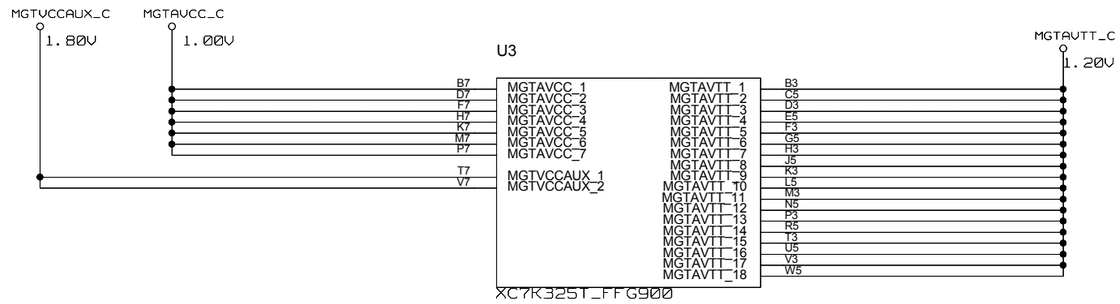

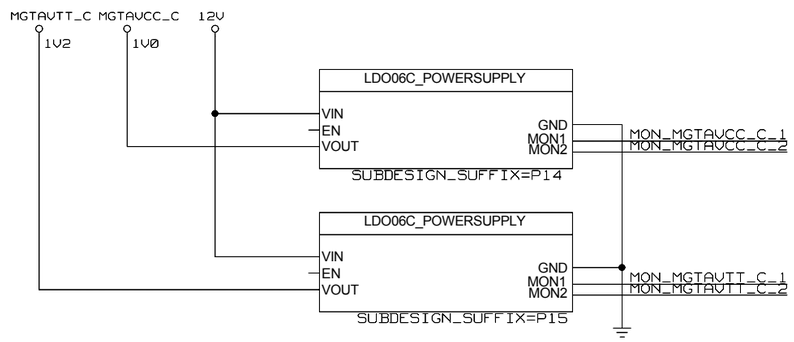

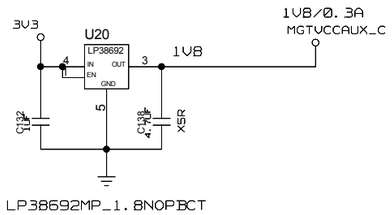

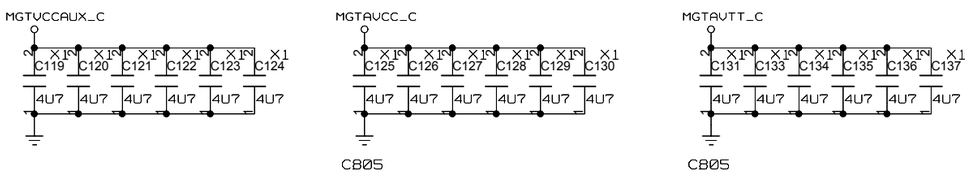

UNIVERSITY OF MAINZ	DRAWING TITLE: KINTEX7 MGT POWER		
BLOCK: POWERSUPPLY	SIZE: C	REV.	DRAWING NO.
	SCALE		SHEET OF

REVISIONS				
ZONE	LTR	DESCRIPTION	DATE	APPR.

U1 CORE POWER MONITOR

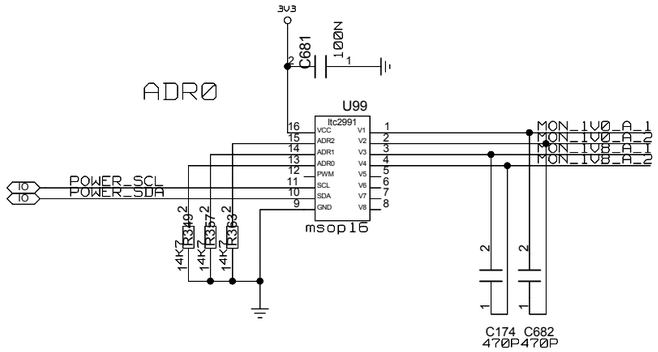

U3 CORE POWER MONITOR

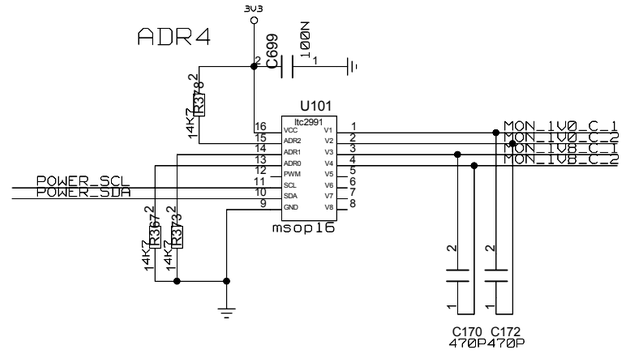

U1 MGT POWER MONITOR

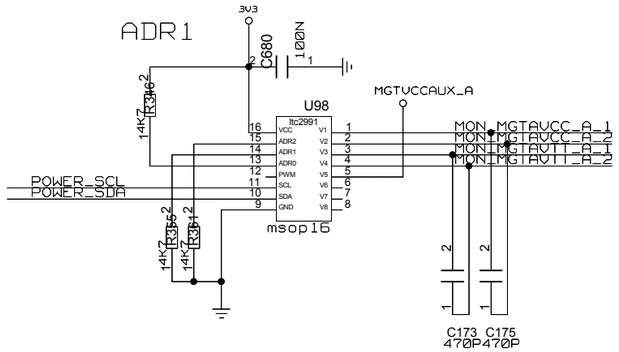

U3 MGT POWER MONITOR

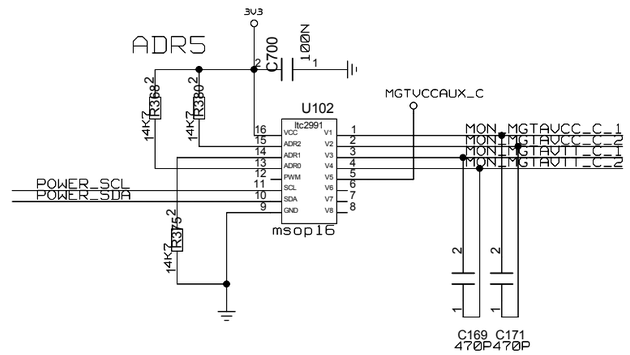

U2 CORE POWER MONITOR

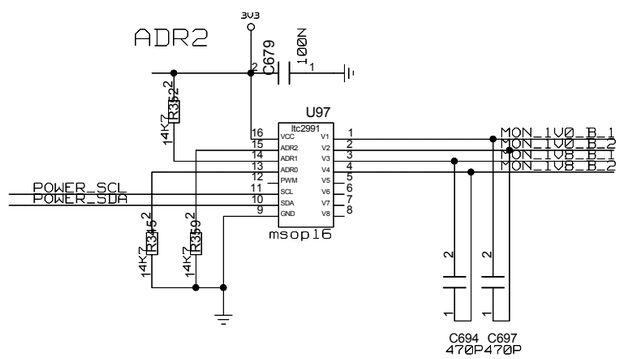

2V5, 3V3 POWER MONITOR

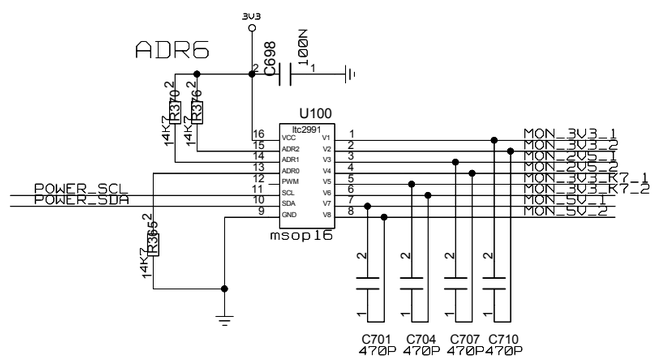

U2 MGT POWER MONITOR

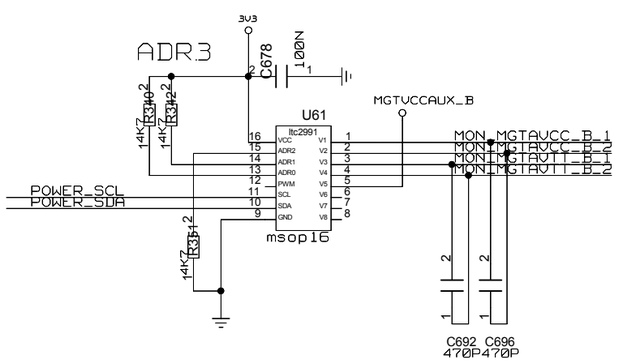

UNIVERSITY OF MAINZ

DRAWING TITLE: I2C POWERSUPPLY MONITORING

SIZE	REV.	DRAWING NO.
C	26.05.2014	

SCALE | SHEET OF

REVISIONS				
ZONE	LTR	DESCRIPTION	DATE	APPR.

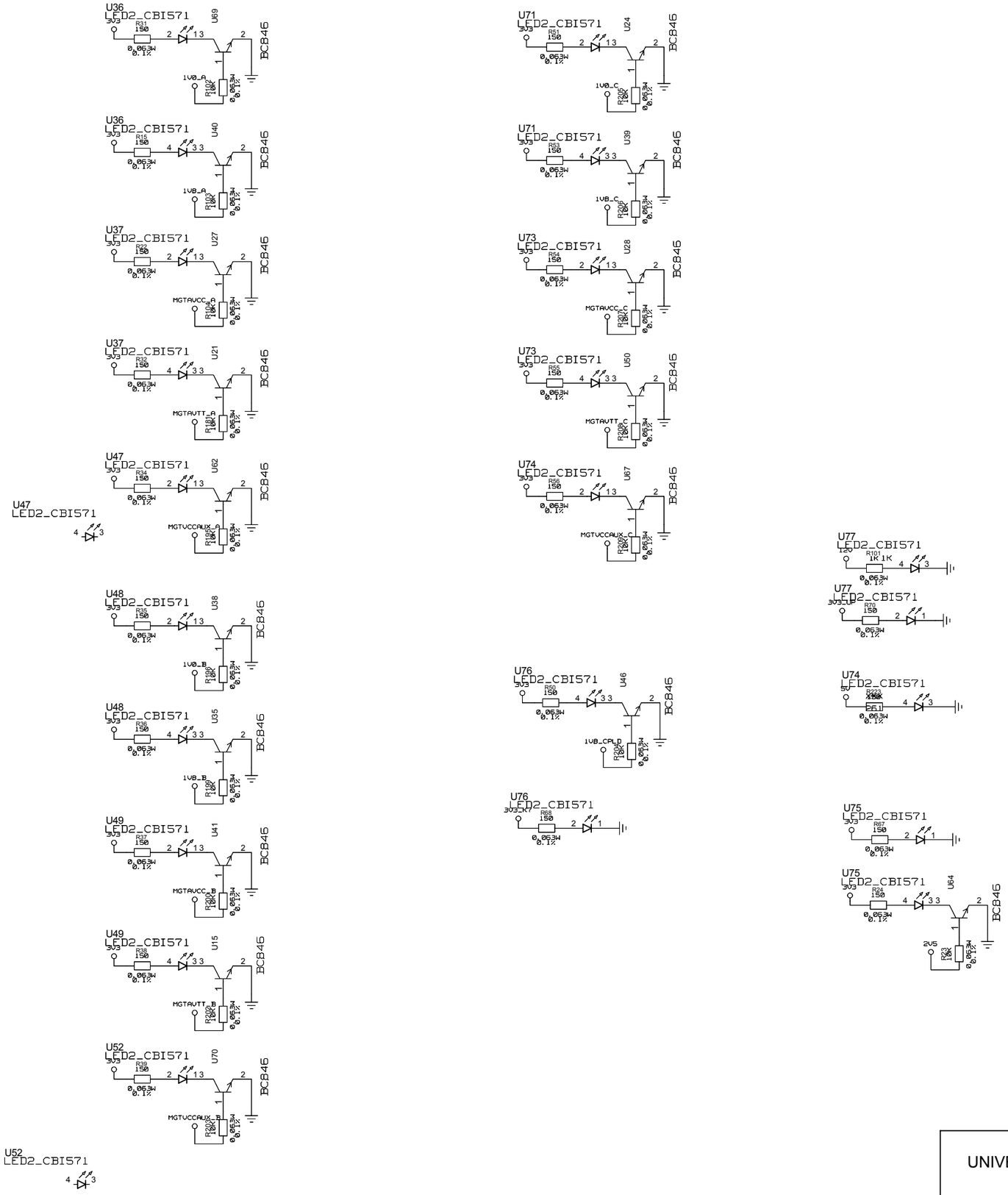

UNIVERSITY OF MAINZ

DRAWING TITLE: POWERSUPPLY LED DISPLAY

SIZE: C

REV.: 27.05.2014

DRAWING NO.

SCALE

SHEET OF

REVISIONS				
ZONE	LTR	DESCRIPTION	DATE	APPR.

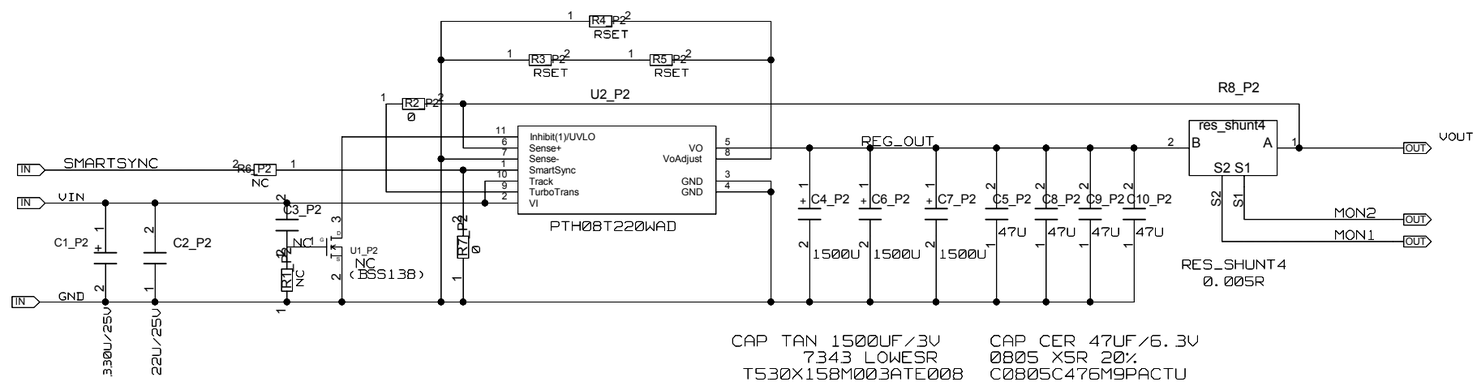

$$R_{SET} = 10\ k\Omega \times \frac{0.69}{V_O - 0.69} - 1.43\ k\Omega$$

Table 1. Standard Values of R_{SET} for Standard Output Voltages

V_O (Standard)	R_{SET} (Standard Value)	V_O (Actual)
5.0 V (1)	169 Ω	5.005 V
3.3 V	1.21 kΩ	3.304 V
2.5 V	2.37 kΩ	2.506 V
1.8 V	4.75 kΩ	1.807 V
1.5 V	6.98 kΩ	1.510 V
1.2 V (2)	12.1 kΩ	1.200 V
1.0 V (2)	20.5 kΩ	1.004 V
0.7 V (2)	681 kΩ	0.700 V

UNIVERSITY OF MAINZ

DRAWING TITLE: PTH08T220W_POWER SUPPLY

SIZE: C | REV. | DRAWING NO.

SCALE | SHEET OF

REVISIONS				
ZONE	LTR	DESCRIPTION	DATE	APPR.

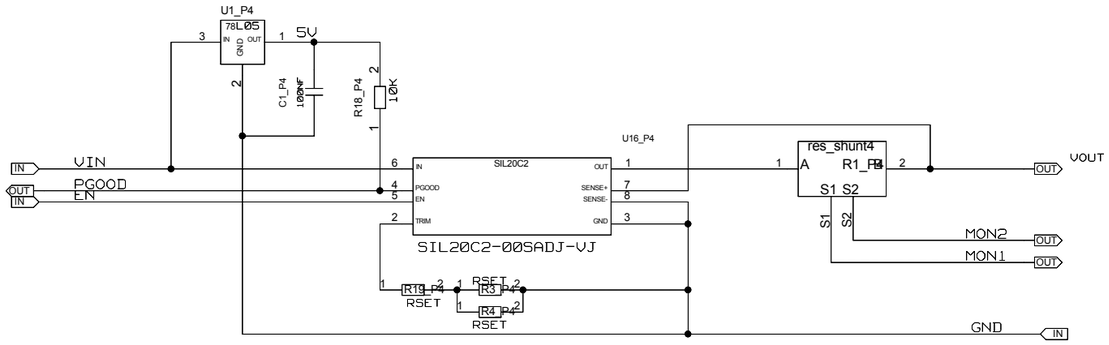

The resistor trim equation for the SIL20C2 is as follows:

$$\text{Rtrim } (k\Omega) = \frac{1.182}{(\text{Vout} - 0.591)}$$

UNIVERSITY OF MAINZ	DRAWING TITLE SIL20C2_POWERSUPPLY		
	SIZE C	REV.	DRAWING NO.
	SCALE		SHEET OF

REVISIONS				
ZONE	LTR	DESCRIPTION	DATE	APPR.

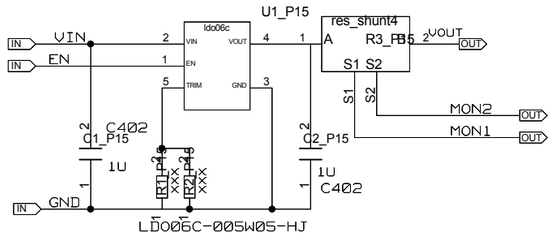

RTRIM(K)=1.182/(VOUT-0.591)

UNIVERSITY OF MAINZ

DRAWING TITLE

LD006C_POWERSUPPLY

SIZE	REV.	DRAWING NO.
C		

SCALE

SHEET OF

REVISIONS				
ZONE	LTR	DESCRIPTION	DATE	APPR.

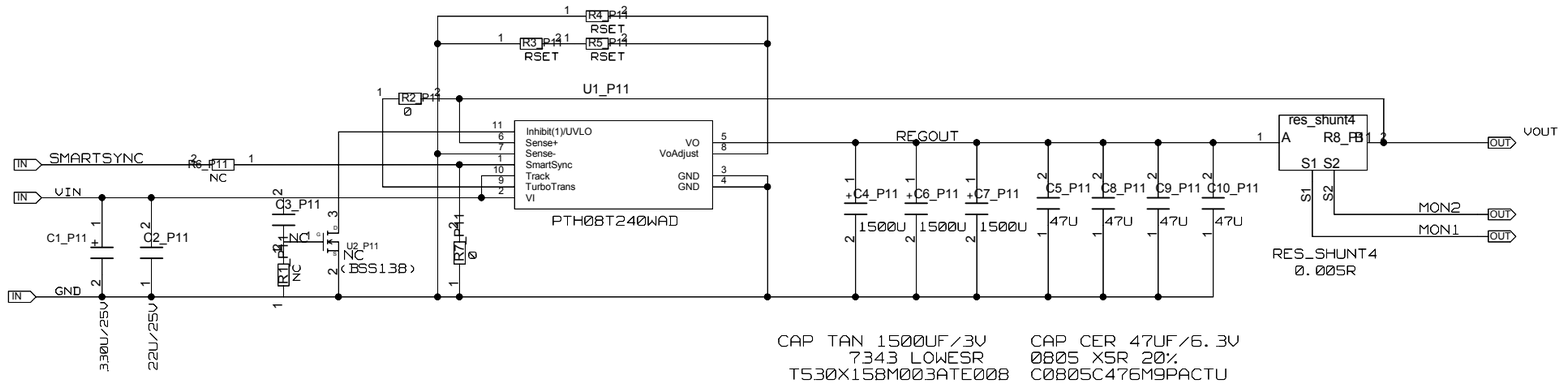

CAP ALUM
330UF/25V 0810 SMD
EEE-HAE331UAP

CAP CER
22UF/25V 1210 Y5U
C3225Y5V1E226Z

CAP TAN 1500UF/3V
7343 LOWESR
T530X158M003ATE008

CAP CER 47UF/6.3V
0805 X5R 20%
C0805C476M9PACTU

Table 2. Output Voltage Set-Point Resistor Values (Standard Values)

V_O Required (V)	R_{SET} (kΩ)	V_O Required (V)	R_{SET} (Ω)
0.70 (1)	681	2.50	2.37 k
0.75 (1)	113	2.60	2.15 k
0.80 (1)	61.9	2.70	2.00 k
0.85 (1)	41.2	2.80	1.82 k
0.90 (1)	31.6	2.90	1.69 k
0.95 (1)	24.9	3.00	1.54 k
1.00 (1)	20.5	3.10	1.43 k
1.05 (1)	17.8	3.20	1.33 k
1.10 (1)	15.4	3.30	1.21 k
1.15 (1)	13.3	3.40	1.10 k
1.20 (1)	12.1	3.50	1.02 k
1.25	10.7	3.60	931
1.30	9.88	3.70 (2)	866
1.35	9.09	3.80 (2)	767
1.40	8.25	3.90 (2)	715
1.45	7.68	4.00 (2)	649
1.50	6.98	4.10 (2)	590
1.55	6.49	4.20 (2)	536
1.60	6.04	4.30 (2)	475
1.65	5.76	4.40 (2)	432
1.70	5.36	4.50 (2)	383
1.75	5.11	4.60 (2)	332
1.80	4.75	4.70 (2)	287
1.85	4.53	4.80 (2)	249
1.90	4.22	4.90 (2)	210
1.95	4.02	5.00 (2)	169
2.00	3.83	5.10 (2)	133
2.10	3.40	5.20 (2)	100
2.20	3.09	5.30 (2)	66.5
2.30	2.67	5.40 (2)	34.8
2.40	2.61	5.50 (2)	4.99

(1) For output voltages ≤ 1.2V, at nominal operating frequency, the output ripple may increase (typically 2×) when operating at input voltages greater than (V_O × 11). When using the SmartSync feature, review the SmartSync application section for further guidance.
(2) For V_O > 3.6 V, the minimum input voltage is (V_O + 2) V.

UNIVERSITY OF MAINZ

DRAWING TITLE
PTH08T240W_POWERSUPPLY

SIZE	REV.	DRAWING NO.
C		

SCALE | SHEET OF

REVISIONS				
ZONE	LTR	DESCRIPTION	DATE	APPR.

TTC CLOCK MGT1

EXTENSION MODUL

CLOCK_LVPECL_SI591_AC
U4_39
CLK_P, CLK_N

CLK_MGT1_P
CLK_MGT1_N

CLOCK_CML_FANOUT6_DC
U52_20
SY58034U_DC_CML
CLK1_IN_P, CLK1_IN_N, CLK2_IN_P, CLK2_IN_N
CLK_OUT_P<5..0>, CLK_OUT_N<5..0>, SEL

MGT1_OSC_P<5..0>
MGT1_OSC_N<5..0>
CML DC

CLKIN=LVPECL_AC
R1=NC C1=10NF
R2=NC C2=10NF
R3=0 R4=0

MGT1_OSC_P<0>
MGT1_OSC_N<0>

EXT_CLK_P<1>
EXT_CLK_N<1>

---> EXT CLOCK

MUX_SEL<0>
MUX_SEL<1>

MUX_CML_4X2_DC
U1_25
SY56028XR_DC_CML
CLK1_IN_P, CLK1_IN_N, CLK2_IN_P, CLK2_IN_N, CLK3_IN_P, CLK3_IN_N, CLK4_IN_P, CLK4_IN_N, SEL0, SEL1
CLK_OUT_P_1, CLK_OUT_N_1, CLK_OUT_P_2, CLK_OUT_N_2

R2 100 — U30 — U42

CLK1IN=CML_DC
CLK2IN=CML_AC
CLK3IN=CML_AC
CLK4IN=NC
R3=NC C1=NC
R4=NC C2=100NF
R5=NC C3=100NF
R6=NC C4=NC

CLOCK_CML_FANOUT6_DC
U52_19
SY58034U_DC_CML
CLK1_IN_P, CLK1_IN_N, CLK2_IN_P, CLK2_IN_N
CLK_OUT_P<5..0>, CLK_OUT_N<5..0>, SEL

MGT1_1_CLK_P<5..0>
MGT1_1_CLK_N<5..0>

CLKIN=CML
R1=NC C1=NC
R2=NC C2=NC
R3=NC R4=NC

CLOCK_CML_FANOUT6_AC
U52_5
SY58034U_DC_CML
A LEFT
MGT1_CLK_P<6..1>
MGT1_CLK_N<6..1>

CLOCK_CML_FANOUT6_AC
U52_6
SY58034U_DC_CML
B RIGHT
MGT1_CLK_P<12..7>
MGT1_CLK_N<12..7>

CLOCK_CML_FANOUT6_AC
U52_7
SY58034U_DC_CML
C LEFT
MGT1_CLK_P<18..13>
MGT1_CLK_N<18..13>

CLOCK_CML_FANOUT6_AC
U52_8
SY58034U_DC_CML
D RIGHT
MGT1_CLK_P<24..19>
MGT1_CLK_N<24..19>

TTC_CLK<0> = JITTERCLEANER
TTC_CLK<1> = GCK
TTC_CLK<2> = EXTENSION_MODUL
TTC_CLK<3> = MMCX_SPARE

TTC_OPTO_IN
TTC_P, TTC_N, DETECT

TTC_IN_P
TTC_IN_N

TTC
IN_P, IN_N, TTC_CTRL<56..0>
TTC_CLK_P<0>, TTC_CLK_N<0>, TTC_CLK_P<3..1>, TTC_CLK_N<3..1>

LVDS

TTC_CLK_P<0>
TTC_CLK_N<0>

JITTERCLEANER_SI5326
U54
DIFF1_P, DIFF1_N, DIFF2_P, DIFF2_N, CTRL<12..0>
DIFF1OUT_P, DIFF1OUT_N, DIFF2OUT_P, DIFF2OUT_N
CML AC

JC_OUT2_P
JC_OUT2_N

TTC_DETECT
TTC_CTRL<56..0>
JC_CTRL<12..0>

EXT_CLK_P<0>
EXT_CLK_N<0>

---> EXT_TTC_INPUT

TTC_CLK_P<3>
TTC_CLK_N<3>
U31
U43

<---EXT_GCK_CLOCK

EXT_CLK_P<5>
EXT_CLK_N<5>
R201 NC
R210 NC

TTC_CLK_P<3..1>
TTC_CLK_N<3..1>
TO GCK

MGT1_CLK_KINTEX U3
C453 100NF — MGT1_CLK_P<25>
C454 100NF — MGT1_CLK_N<25>

MGT1_CLK_P<6..1>
MGT1_CLK_P<12..7>
MGT1_CLK_P<18..13>
MGT1_CLK_P<24..19>
MGT1_CLK_P<25>
MGT1_CLK_P<25..1>

MGT1 CLOCK

MGT1_CLK_N<6..1>
MGT1_CLK_N<12..7>
MGT1_CLK_N<18..13>
MGT1_CLK_N<24..19>
MGT1_CLK_N<25>
MGT1_CLK_N<25..1>

EXT_CLK_P/N	0 JT
EXT_CLK_P/N	1 MGT1
EXT_CLK_P/N	2 MGT2
EXT_CLK_P/N	3 MGT3
EXT_CLK_P/N	4 MGT4
EXT_CLK_P/N	5 TTC OUT
EXT_CLK_P/N	6 GCK1

EXT_CLK_P<6..0>
EXT_CLK_N<6..0>
MUX_SEL<9..0>

UPDATE PICK & PLACE DATA FOR FANOUT AND MUX

UNIVERSITY OF MAINZ

BLOCK: CLOCK

DRAWING TITLE: MGT1 CLOCK CML

SIZE: C
REV.: 27.05.2014
DRAWING NO.
SCALE
SHEET OF

REVISIONS				
ZONE	LTR	DESCRIPTION	DATE	APPR.

MGT2 CLOCK

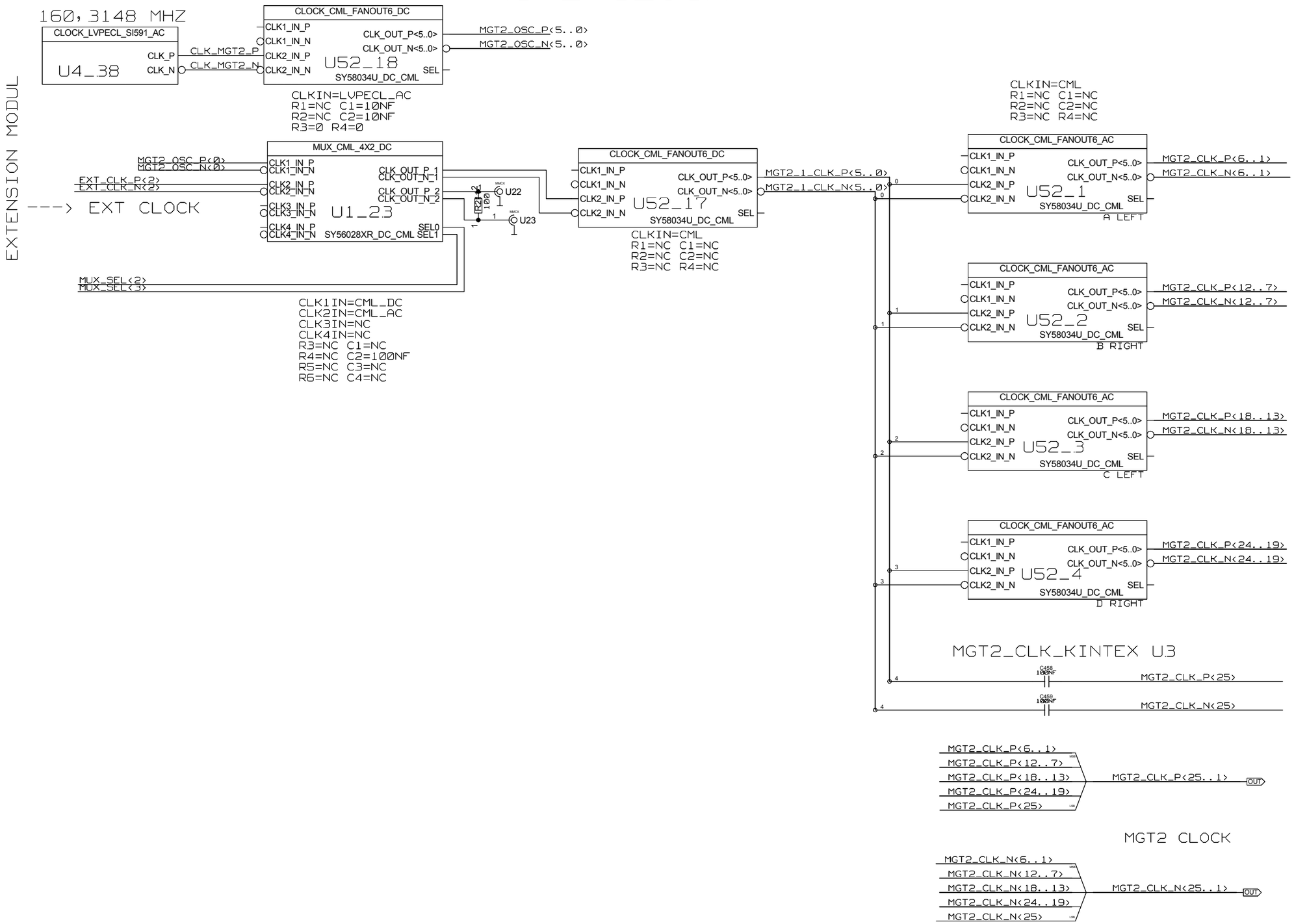

UPDATE PICK & PLACE DATA FOR FANOUT AND MUX

UNIVERSITY OF MAINZ	DRAWING TITLE: MGT2 CLOCK CML		
BLOCK: CLOCK	SIZE: C	REV. 27.05.2014	DRAWING NO.
	SCALE		SHEET OF

REVISIONS				
ZONE	LTR	DESCRIPTION	DATE	APPR.

MGT3 CLOCK

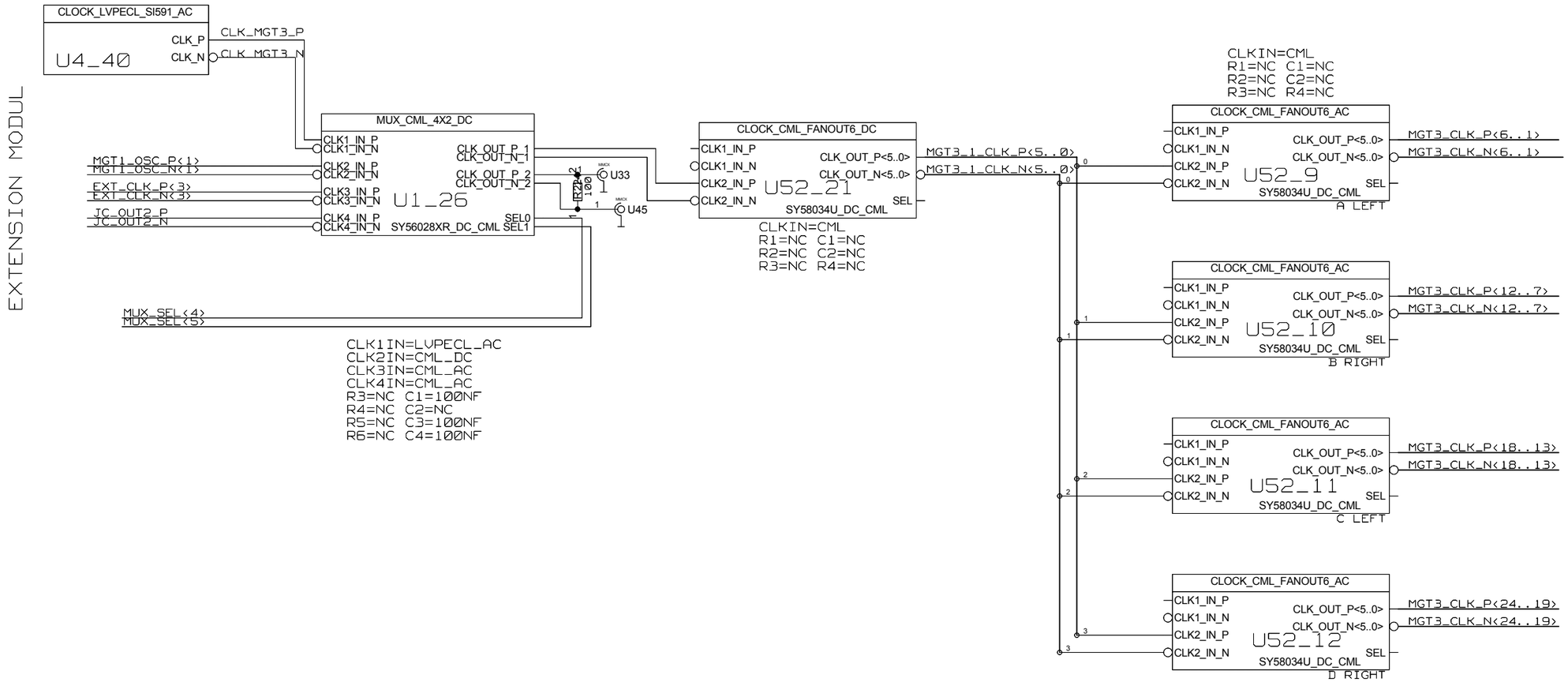

MGT3 CLOCK

UPDATE PICK & PLACE DATA FOR FANOUT AND MUX

UNIVERSITY OF MAINZ	DRAWING TITLE: MGT3 CLOCK CML		
BLOCK: CLOCK	SIZE: C	REV. 27.05.2014	DRAWING NO.
	SCALE		SHEET OF

REVISIONS				
ZONE	LTR	DESCRIPTION	DATE	APPR.

MGT4 CLOCK

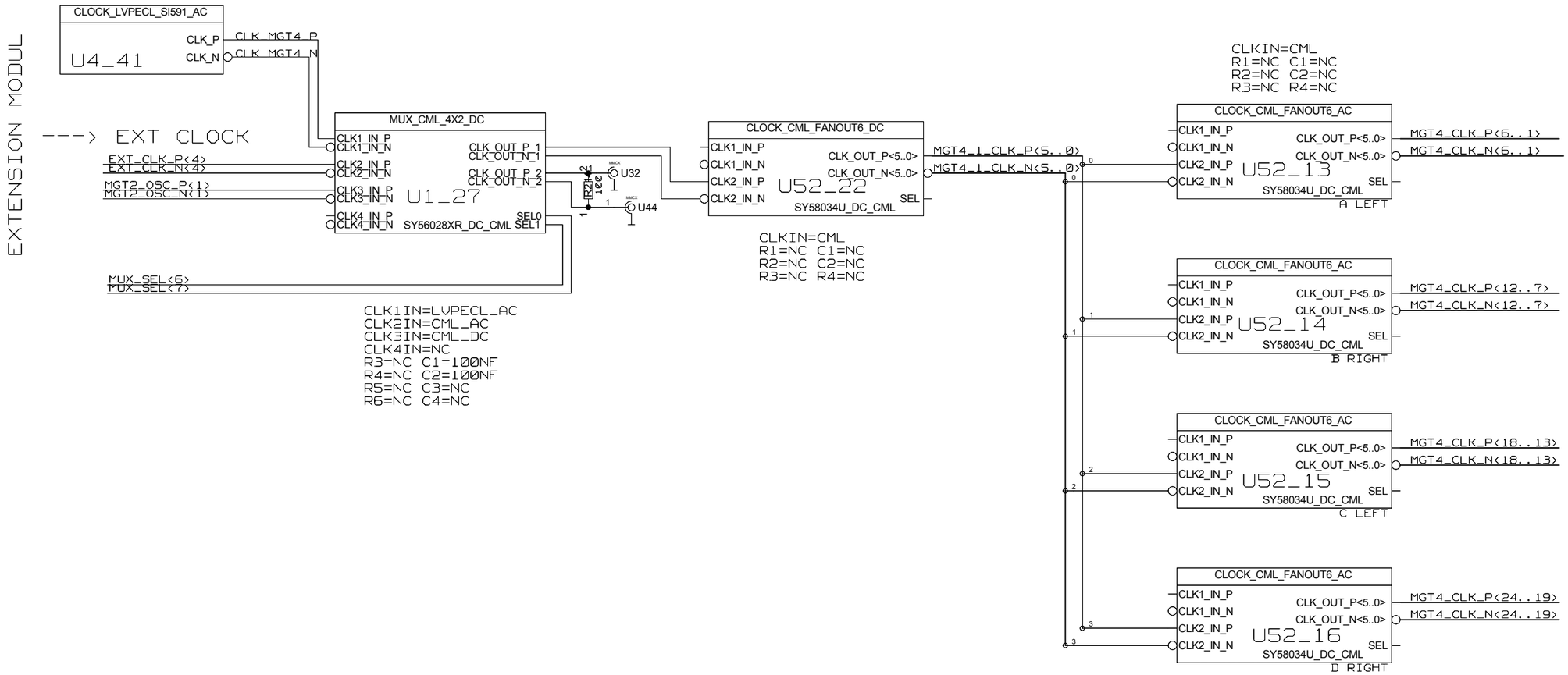

UPDATE PICK & PLACE DATA FOR FANOUT AND MUX

UNIVERSITY OF MAINZ	DRAWING TITLE: MGT4 CLOCK CML		
BLOCK: CLOCK	SIZE: C	REV. 27.05.2014	DRAWING NO.
	SCALE		SHEET OF

REVISIONS				
ZONE	LTR	DESCRIPTION	DATE	APPR.

GCK1 + GCK2 CLOCK

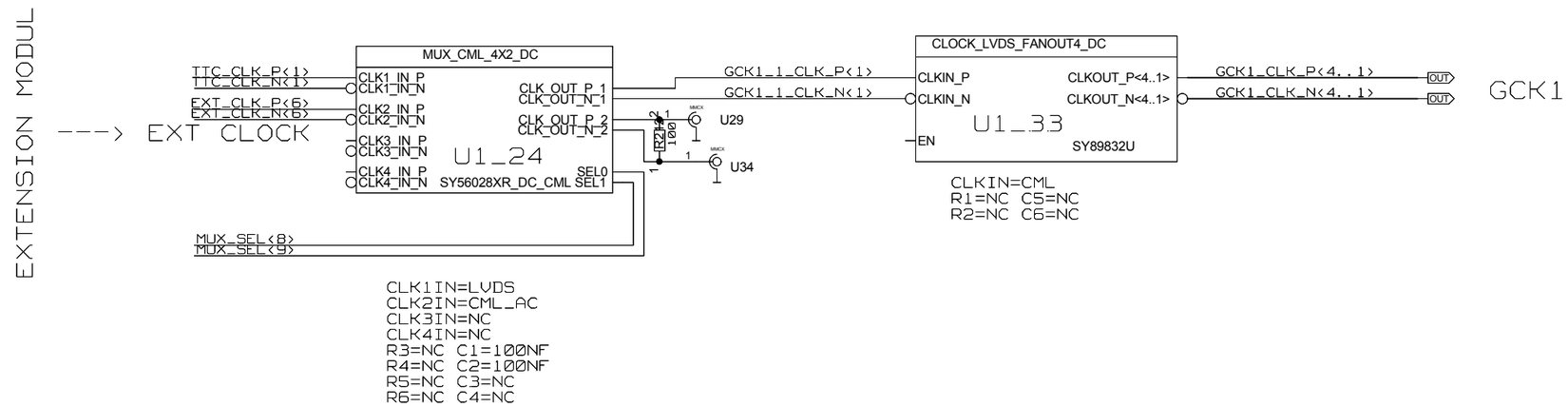

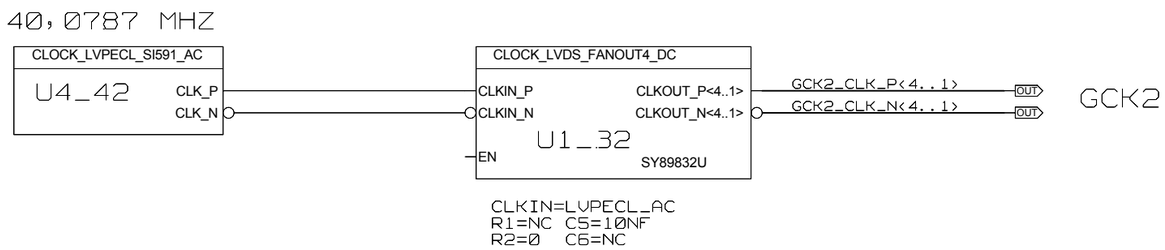

UPDATE PICK & PLACE DATA FOR FANOUT AND MUX

UNIVERSITY OF MAINZ	DRAWING TITLE: GCK1+2 CLOCK LVDS		
BLOCK: CLOCK	SIZE: C	REV.: 27.05.2014	DRAWING NO.
	SCALE		SHEET OF

REVISIONS				
ZONE	LTR	DESCRIPTION	DATE	APPR.

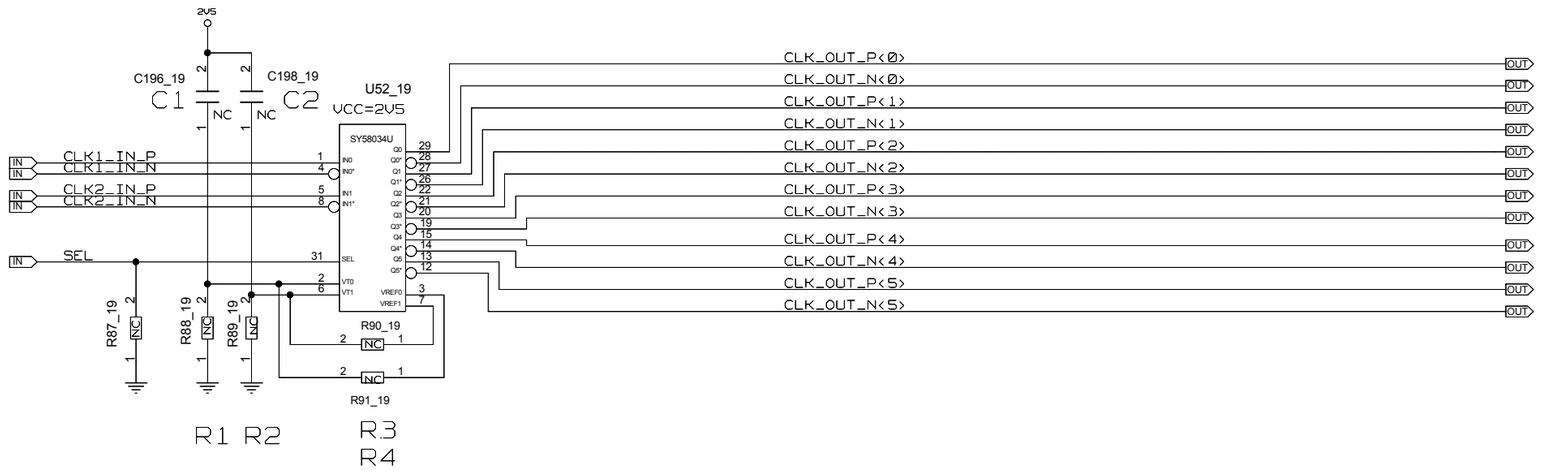

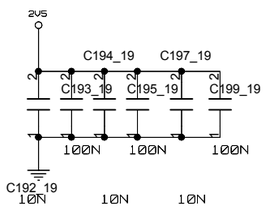

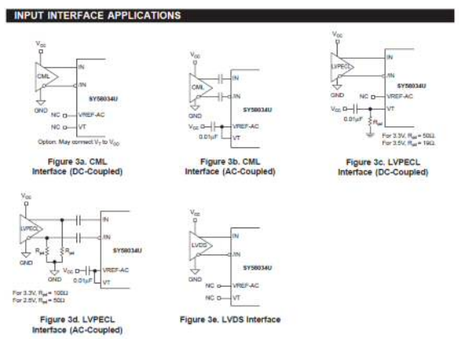

UNIVERSITY OF MAINZ	DRAWING TITLE CLOCK_CML_FANOUT6_DC		
BLOCK: CLOCK	SIZE C	REV.	DRAWING NO.
	SCALE		SHEET OF

REVISIONS				
ZONE	LTR	DESCRIPTION	DATE	APPR.

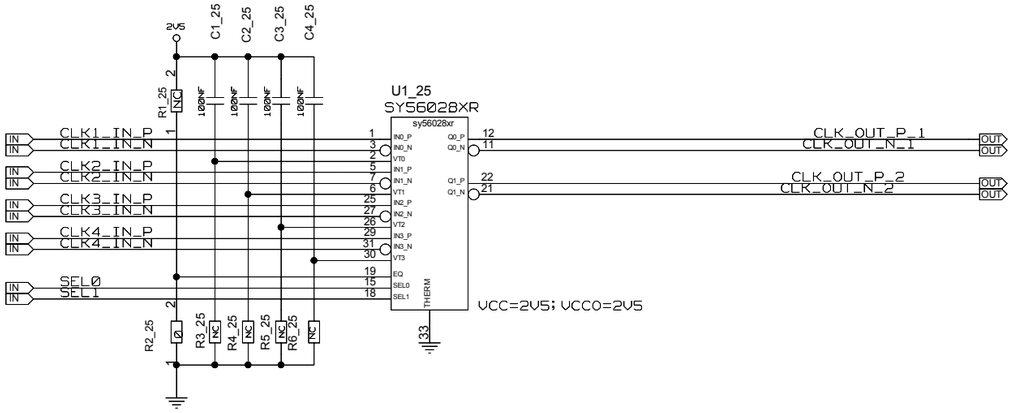

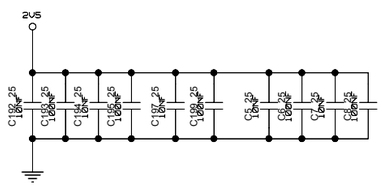

Input Interface Applications

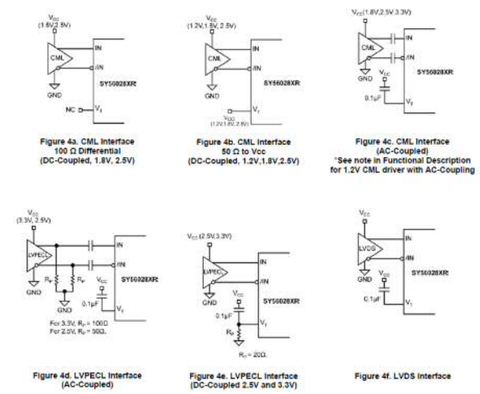

UNIVERSITY OF MAINZ	DRAWING TITLE MUX_CML_4X2_DC		
BLOCK: CLOCK	SIZE C	REV.	DRAWING NO.
	SCALE		SHEET OF

REVISIONS				
ZONE	LTR	DESCRIPTION	DATE	APPR.

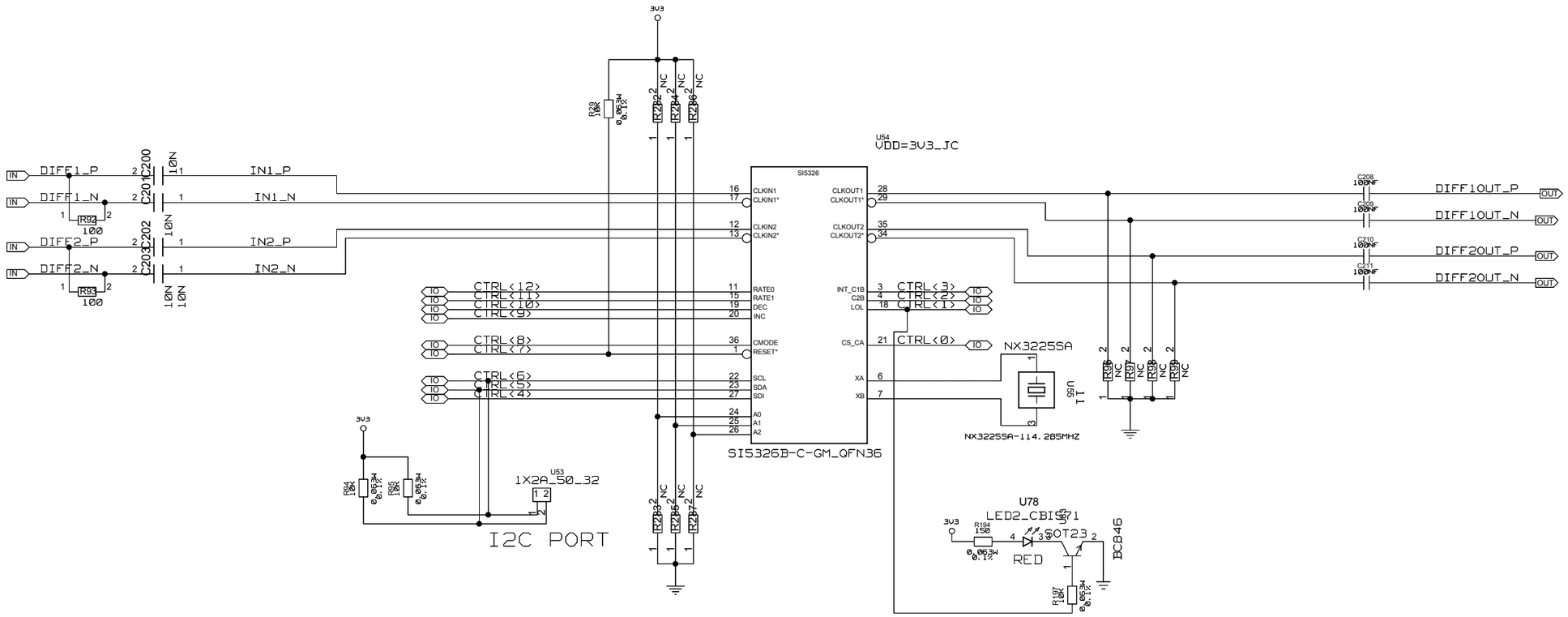

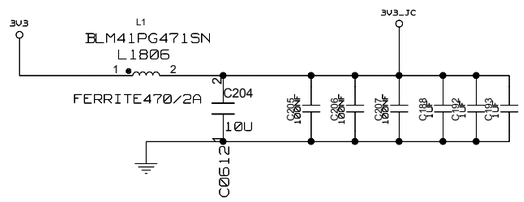

UNIVERSITY OF MAINZ

DRAWING TITLE: JITTERCLEANER_SI5326

SIZE	REV.	DRAWING NO.
C		

SCALE | SHEET OF

REVISIONS				
ZONE	LTR	DESCRIPTION	DATE	APPR.

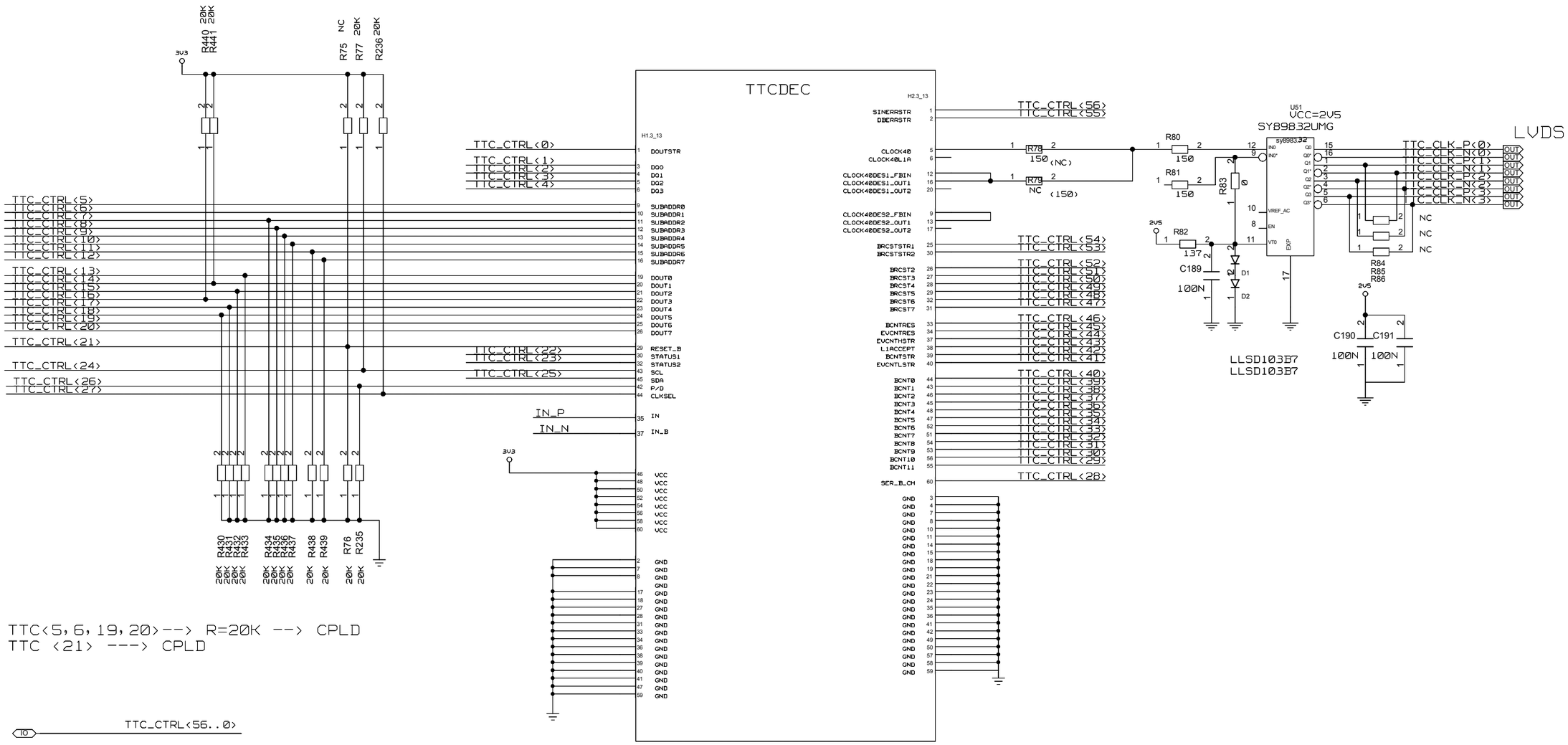

	30.05.2014 U.SCHAEFFER
UNIVERSITY OF MAINZ	DRAWING TITLE: TTC
	SIZE: C · REV.: 30.05.2014 · DRAWING NO.
	SCALE · SHEET OF

REVISIONS				
ZONE	LTR	DESCRIPTION	DATE	APPR.

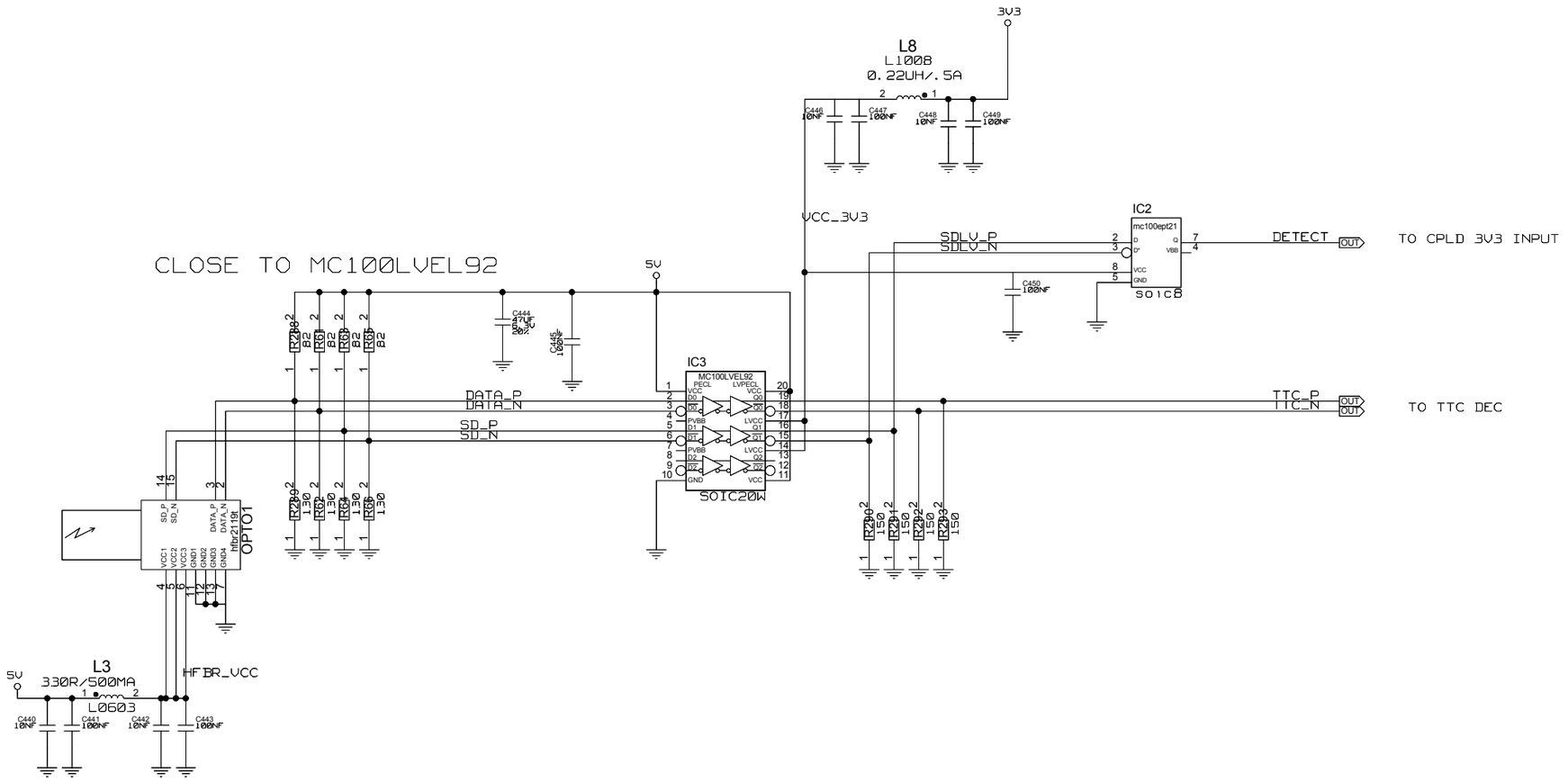

UNIVERSITY OF MAINZ	DRAWING TITLE: TTC OPTO IN		
BLOCK: CLOCK	SIZE: C	REV.	DRAWING NO.
	SCALE		SHEET OF

REVISIONS				
ZONE	LTR	DESCRIPTION	DATE	APPR.

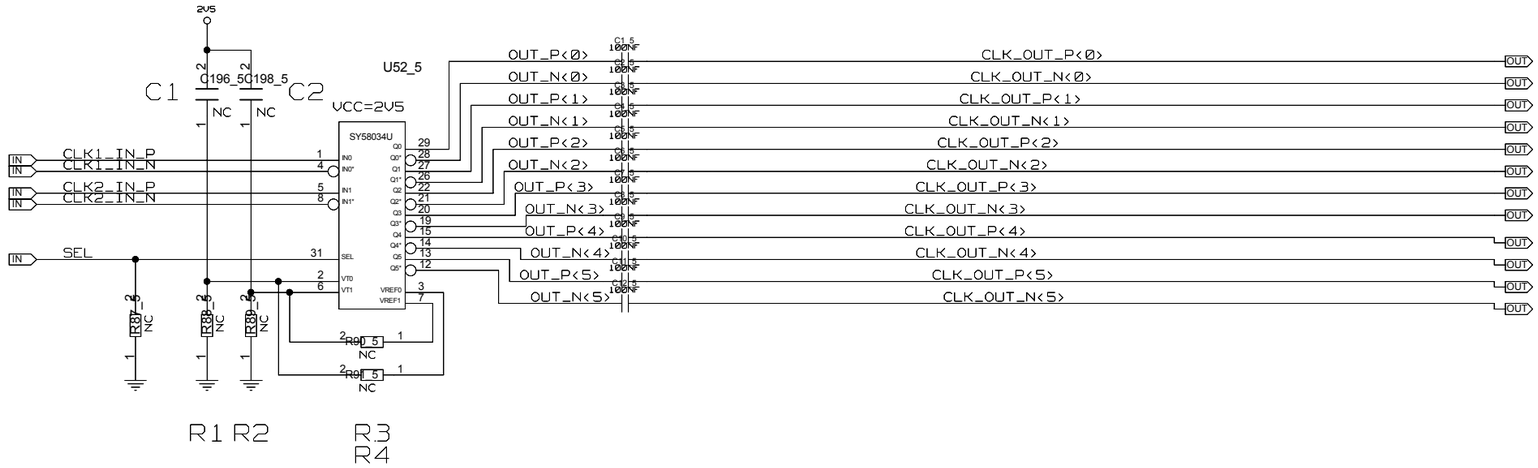

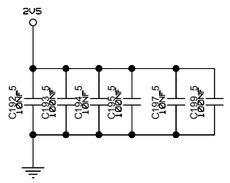

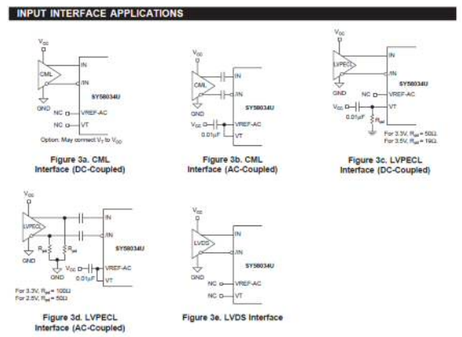

UNIVERSITY OF MAINZ	DRAWING TITLE: CLOCK CML FANOUT6 AC		
BLOCK: CLOCK	SIZE: C	REV.	DRAWING NO.
	SCALE		SHEET OF

REVISIONS				
ZONE	LTR	DESCRIPTION	DATE	APPR.

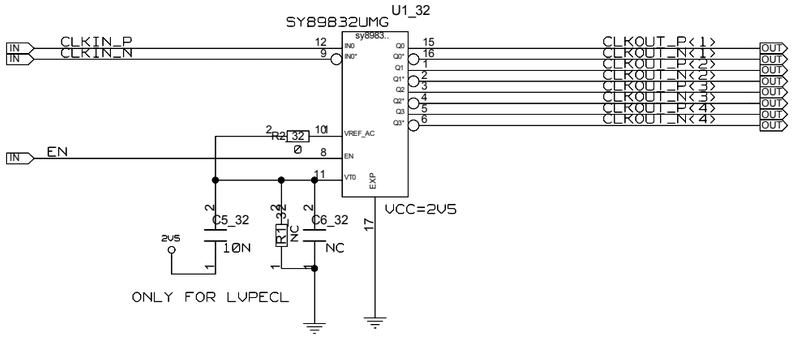

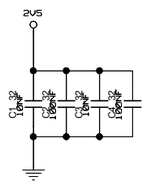

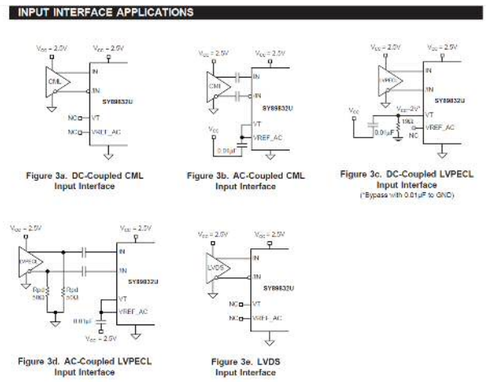

UNIVERSITY OF MAINZ	DRAWING TITLE: CLOCK LVDS FANOUT4 DC
BLOCK: CLOCK	SIZE: C · REV. · DRAWING NO.
	SCALE · SHEET OF

REVISIONS				
ZONE	LTR	DESCRIPTION	DATE	APPR.

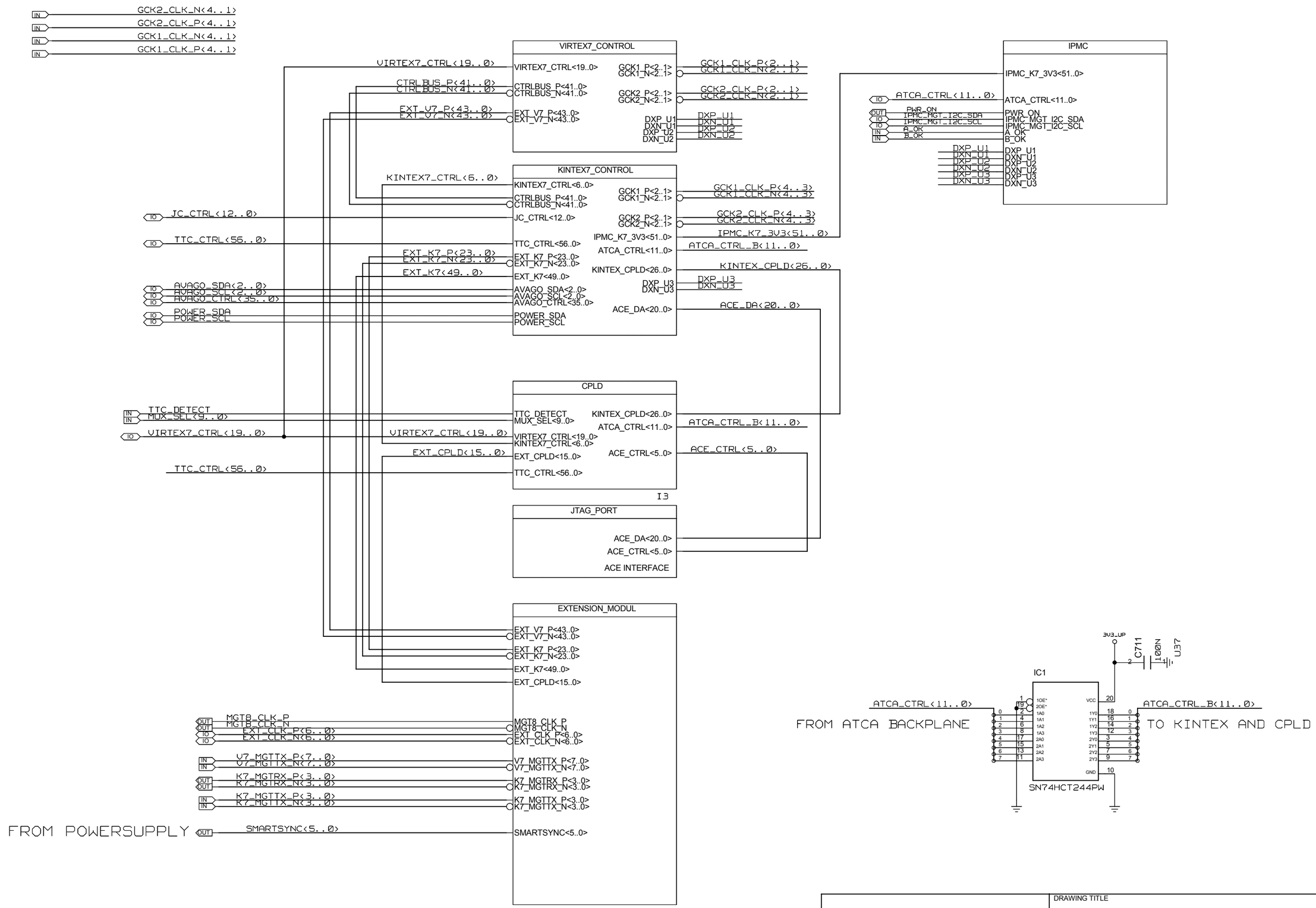

UNIVERSITY OF MAINZ	DRAWING TITLE: BOARDCONTROL	
BLOCK: CONTROL	SIZE: C	REV.: 30.05.2014
	DRAWING NO.	
	SCALE	SHEET OF

REVISIONS				
ZONE	LTR	DESCRIPTION	DATE	APPR.

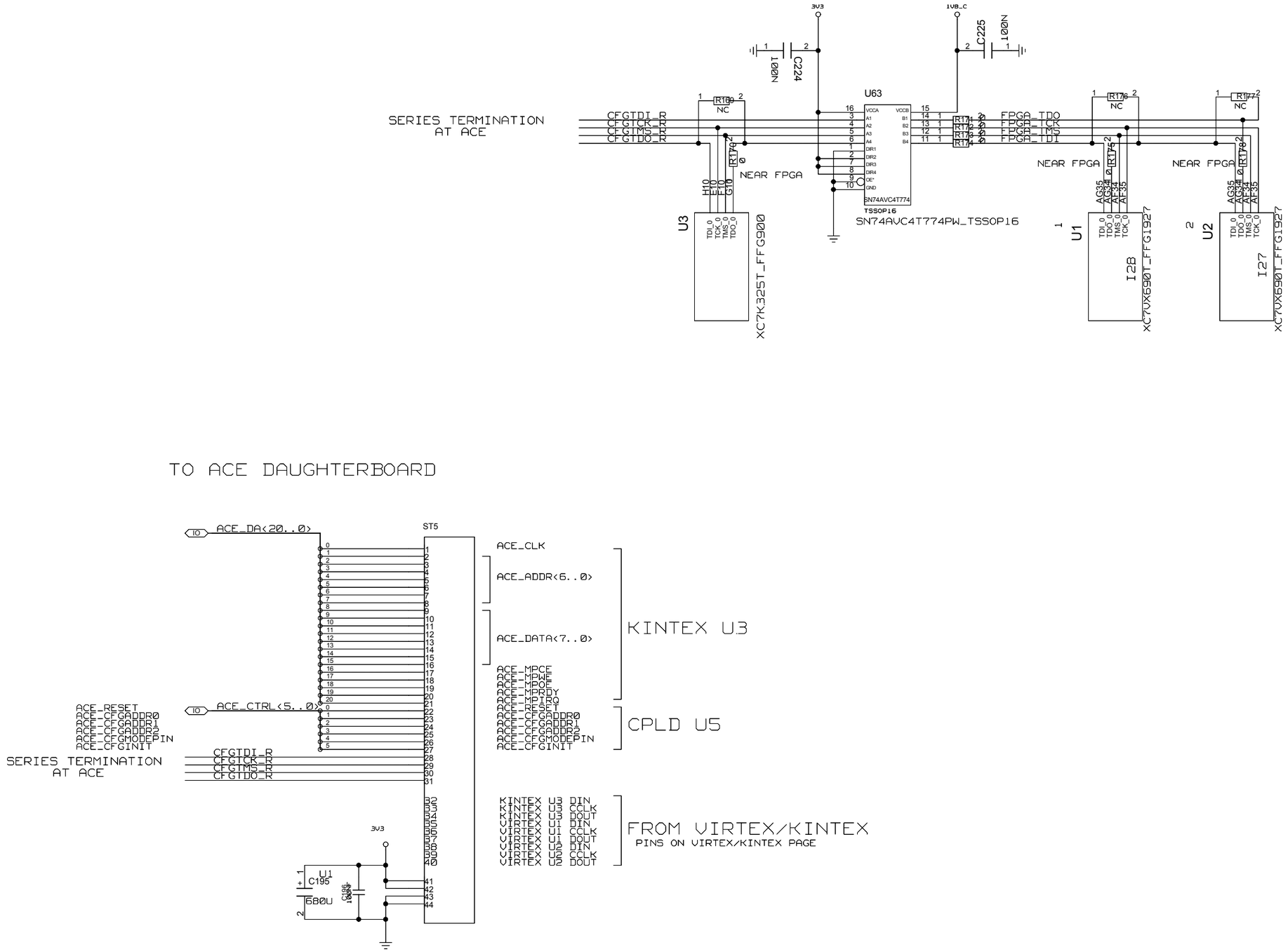

UNIVERSITY OF MAINZ	DRAWING TITLE: JTAG + ACE INTERFACE		
BLOCK: CONTROL JTAG	SIZE: C	REV.: 02.06.2014	DRAWING NO.
	SCALE		SHEET OF

REVISIONS				
ZONE	LTR	DESCRIPTION	DATE	APPR.

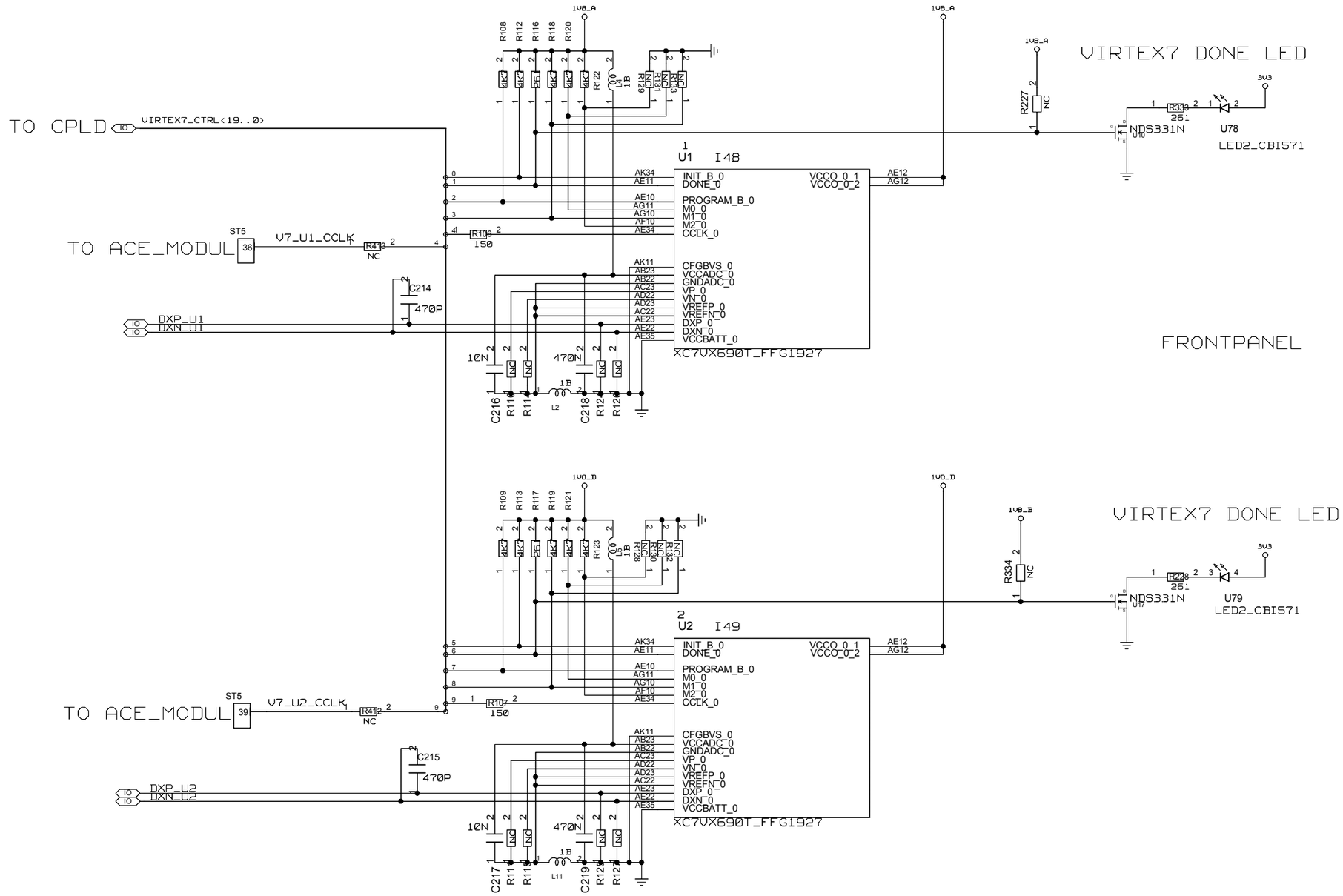

UNIVERSITY OF MAINZ	DRAWING TITLE: CONTROL		
BLOCK: CONTROL VIRTEX7 CONTROL	SIZE: C	REV.: 26.05.2014	DRAWING NO.
	SCALE		SHEET OF

REVISIONS				
ZONE	LTR	DESCRIPTION	DATE	APPR.

ROD

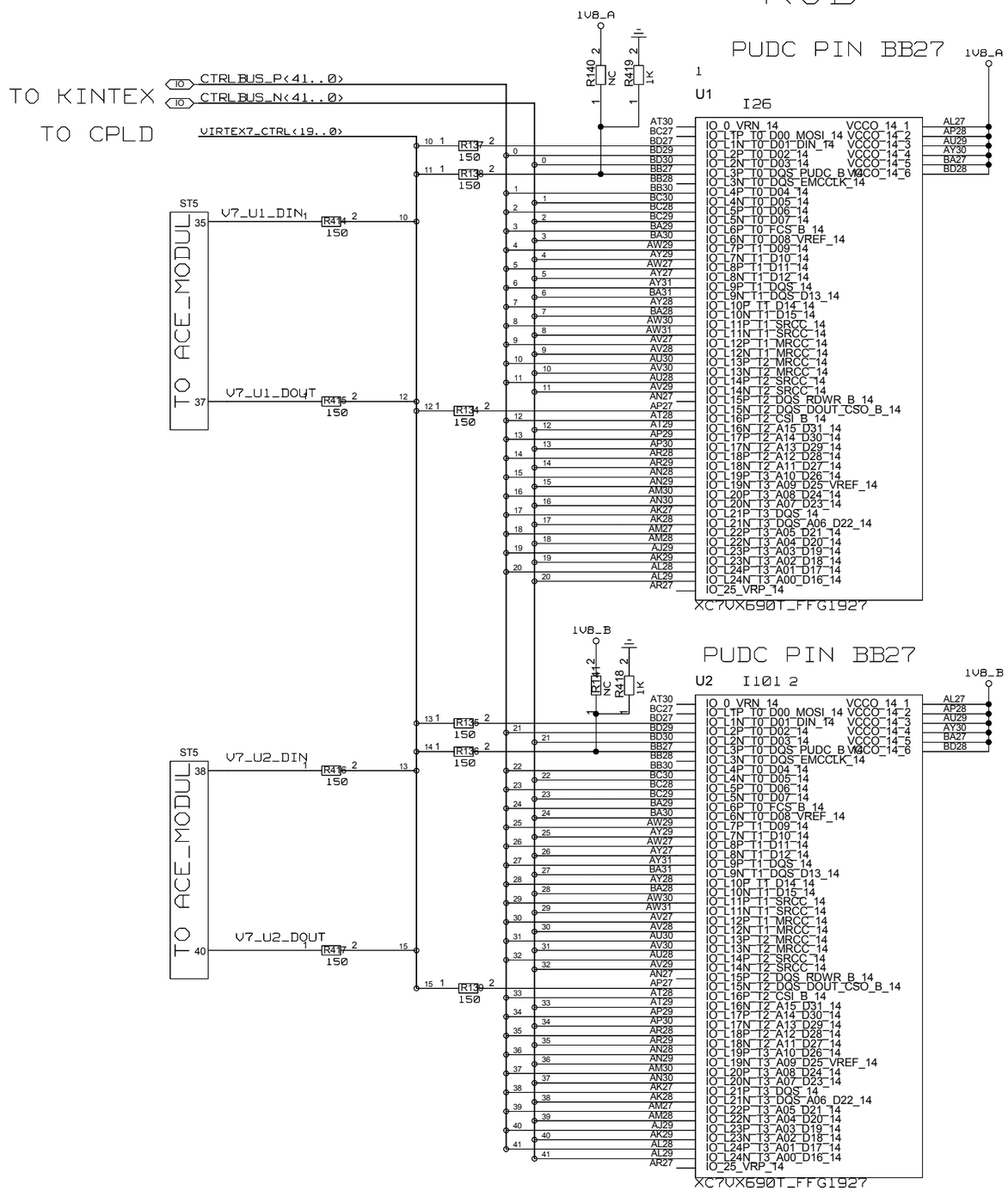

UNIVERSITY OF MAINZ	DRAWING TITLE U1+U2 CONTROLBUS --> CPLD U1+U2 RODBUS --> KINTEX7 U1+U2 --> ACE_MODUL	
BLOCK: CONTROL VIRTEX7 CONTROL	SIZE C	REV. 26.05.2014 / DRAWING NO.
	SCALE	SHEET OF

REVISIONS				
ZONE	LTR	DESCRIPTION	DATE	APPR.

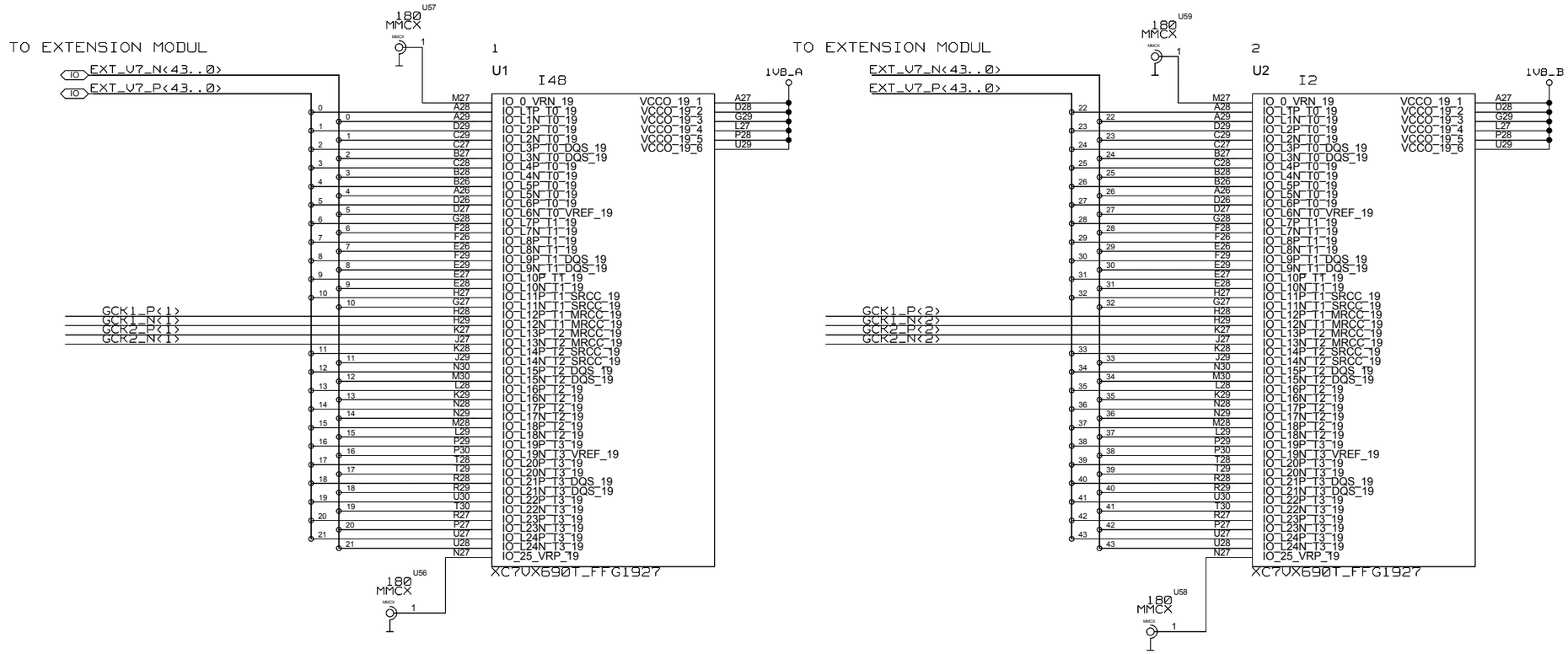

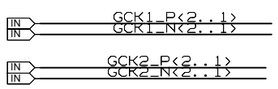

UNIVERSITY OF MAINZ	DRAWING TITLE VIRTEX7 TO EXTENSION MODUL VIRTEX7 GCK		
BLOCK: CONTROL VIRTEX7 CONTROL	SIZE C	REV.	DRAWING NO.
	SCALE		SHEET OF

REVISIONS				
ZONE	LTR	DESCRIPTION	DATE	APPR.

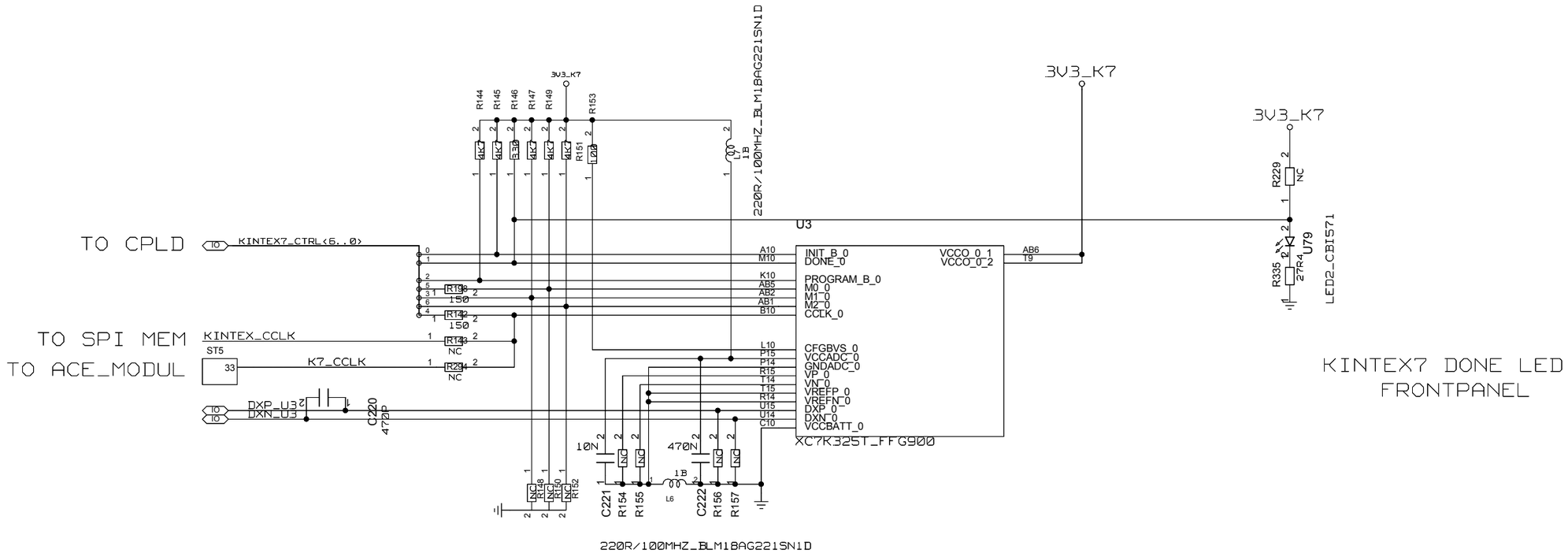

220R/100MHZ_BLM18AG221SN1D

UNIVERSITY OF MAINZ	DRAWING TITLE: KINTEX CONTROL	
BLOCK: CONTROL KINTEX7 CONTROL	SIZE: C	REV. / DRAWING NO.
	SCALE	SHEET OF

REVISIONS				
ZONE	LTR	DESCRIPTION	DATE	APPR.

HIGH RANGE BANKS

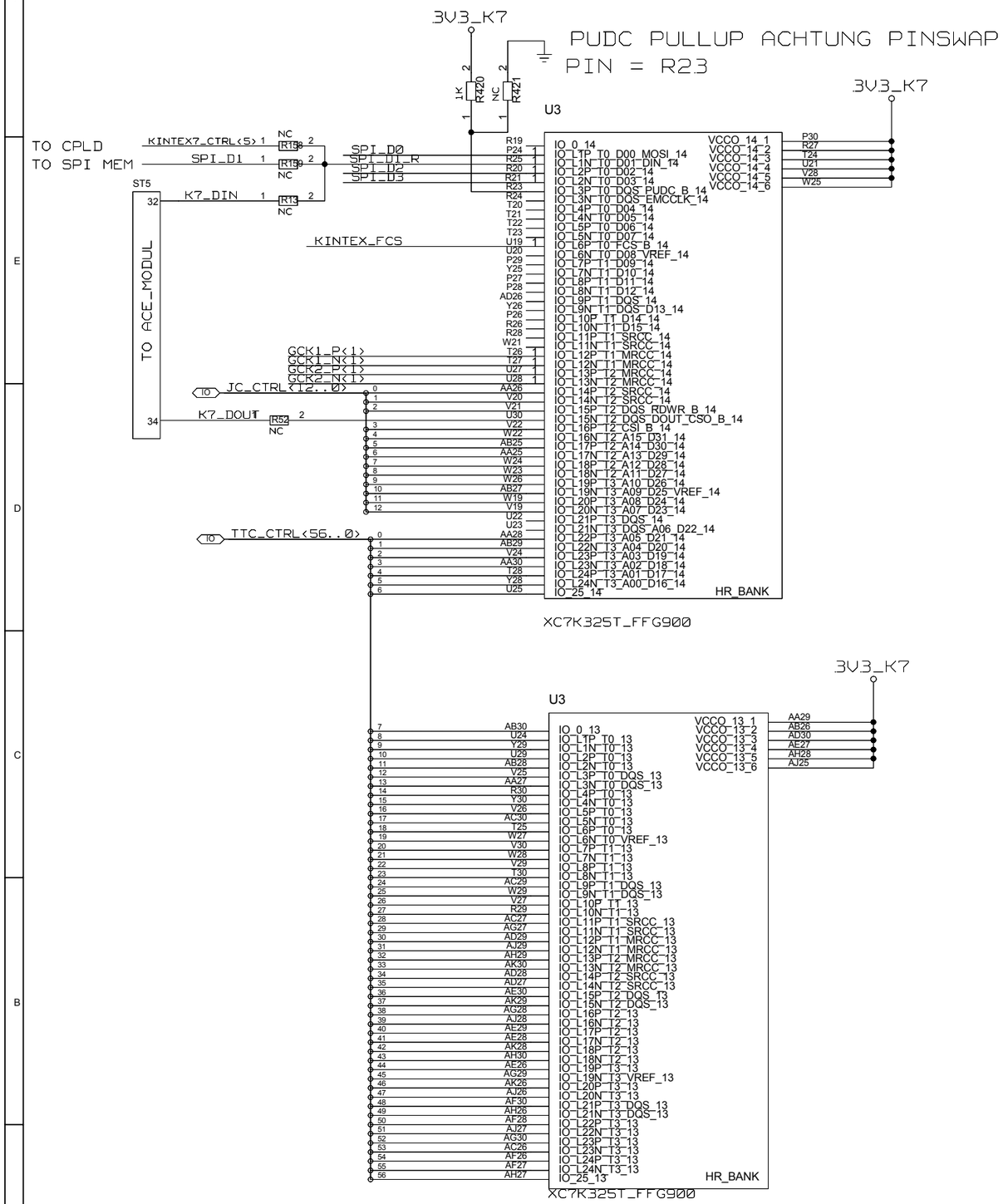

BANK14 VCCO ABHAENGIG VON SPI SPANNUNG

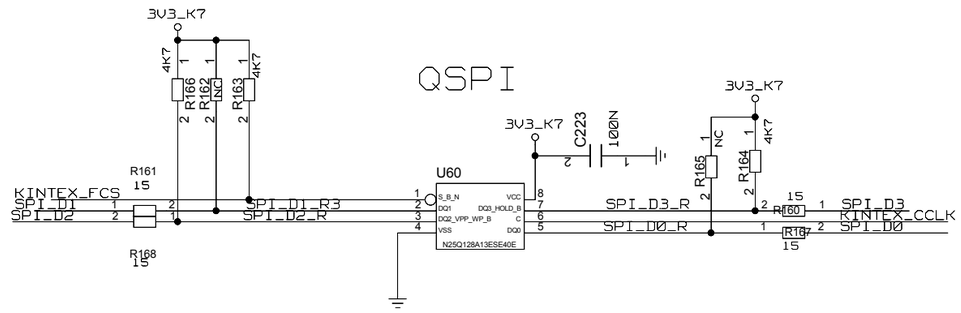

UNIVERSITY OF MAINZ	DRAWING TITLE: SD, JITTERCLEANER, TTC, QSPI CONTROL		
BLOCK: CONTROL KINTEX7 CONTROL	SIZE: C	REV. 03.06.2014	DRAWING NO.
	SCALE		SHEET OF

REVISIONS				
ZONE	LTR	DESCRIPTION	DATE	APPR.

HIGH RANGE BANKS

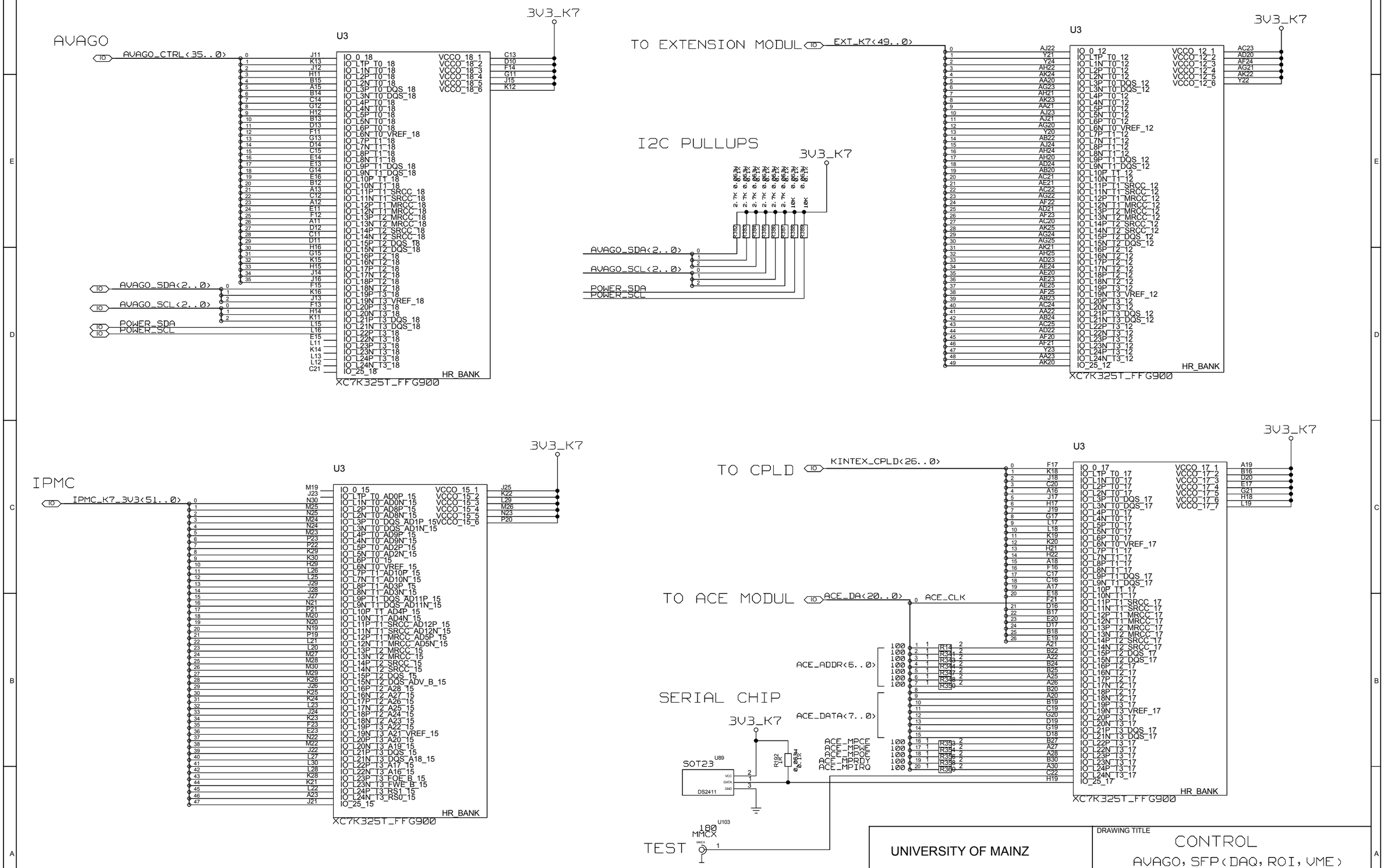

UNIVERSITY OF MAINZ	DRAWING TITLE: CONTROL AVAGO, SFP(DAQ, ROI, VME)		
BLOCK: CONTROL KINTEX7 CONTROL	SIZE: C	REV.: 03.06.2014	DRAWING NO.
	SCALE		SHEET OF

REVISIONS				
ZONE	LTR	DESCRIPTION	DATE	APPR.

HIGH RANGE BANKS

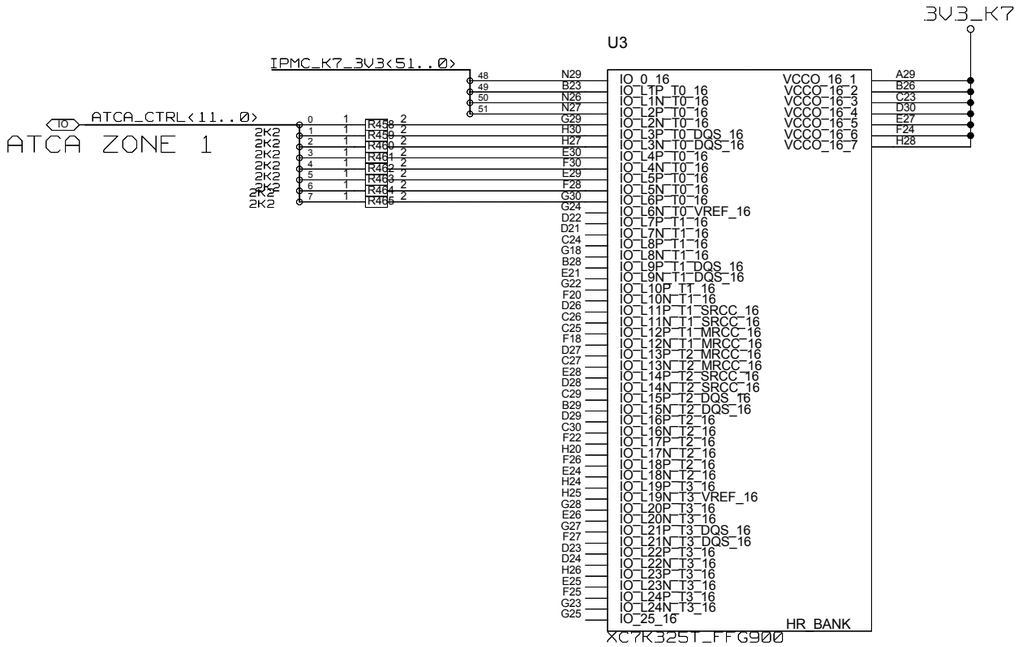

UNIVERSITY OF MAINZ	DRAWING TITLE		
BLOCK: CONTROL KINTEX7 CONTROL	SIZE C	REV.	DRAWING NO.
	SCALE		SHEET OF

REVISIONS				
ZONE	LTR	DESCRIPTION	DATE	APPR.

HIGH PERFORMACE BANKS 32, 33, 34

ROD BUS

PINSWAP ONLY INSIDE SAME BANK

FROM VIRTEX7_U1/U2

IO CTRL_BUS_P<41..0>

IO CTRL_BUS_N<41..0>

32

U3

1V8_C

Pin	Signal
Y14	IO_0_VRN_32
AD16	IO_L1P_T0_32
AD17	IO_L1N_T0_32
AC19	IO_L2P_T0_32
AB19	IO_L2N_T0_32
Y18	IO_L3P_T0_DQS_32
Y19	IO_L3N_T0_DQS_32
AB18	IO_L4P_T0_32
AA18	IO_L4N_T0_32
AE18	IO_L5P_T0_32
AD18	IO_L5N_T0_32
AC15	IO_L6P_T0_32
AC16	IO_L6N_T0_VREF_32
AE19	IO_L7P_T1_32
AD19	IO_L7N_T1_32
AC17	IO_L8P_T1_32
AB17	IO_L8N_T1_32
AE16	IO_L9P_T1_DQS_32
AF16	IO_L9N_T1_DQS_32
AB15	IO_L10P_T1_32
AA15	IO_L10N_T1_32
AG19	IO_L11P_T1_SRCC_32
AH19	IO_L11N_T1_SRCC_32
AG18	IO_L12P_T1_MRCC_32
AF18	IO_L12N_T1_MRCC_32
AF17	IO_L13P_T2_MRCC_32
AG17	IO_L13N_T2_MRCC_32
AJ18	IO_L14P_T2_SRCC_32
AK18	IO_L14N_T2_SRCC_32
AJ19	IO_L15P_T2_DQS_32
AK19	IO_L15N_T2_DQS_32
AH17	IO_L16P_T2_32
AJ17	IO_L16N_T2_32
AG14	IO_L17P_T2_32
AF15	IO_L17N_T2_32
AG15	IO_L18P_T2_32
AH15	IO_L18N_T2_32
AE15	IO_L19P_T3_32
AE14	IO_L19N_T3_VREF_32
AK15	IO_L20P_T3_32
AK16	IO_L20N_T3_32
AJ16	IO_L21P_T3_DQS_32
AH16	IO_L21N_T3_DQS_32
AC14	IO_L22P_T3_32
AD14	IO_L22N_T3_32
AA17	IO_L23P_T3_32
AA16	IO_L23N_T3_32
Y16	IO_L24P_T3_32
Y15	IO_L24N_T3_32
AB14	IO_25_VRP_32

Pin	Signal
AA19	VCCO_32_1
AB16	VCCO_32_2
AE17	VCCO_32_3
AF14	VCCO_32_4
AH18	VCCO_32_5
AJ15	VCCO_32_6

HP_BANK

XC7K325T_FFG900

1V8_C

U3

Pin	Signal
Y13	IO_0_VRN_33
AE9	IO_L1P_T0_33
AD9	IO_L1N_T0_33
AD8	IO_L2P_T0_33
AE8	IO_L2N_T0_33
AF10	IO_L3P_T0_DQS_33
AE10	IO_L3N_T0_DQS_33
AG9	IO_L4P_T0_33
AH9	IO_L4N_T0_33
AJ11	IO_L5P_T0_33
AH11	IO_L5N_T0_33
AK9	IO_L6P_T0_33
AJ9	IO_L6N_T0_VREF_33
AD12	IO_L7P_T1_33
AD11	IO_L7N_T1_33
AH10	IO_L8P_T1_33
AG10	IO_L8N_T1_33
AA8	IO_L9P_T1_DQS_33
AB8	IO_L9N_T1_DQS_33
AK11	IO_L10P_T1_33
AK10	IO_L10N_T1_33
AC9	IO_L11P_T1_SRCC_33
AB9	IO_L11N_T1_SRCC_33
AB10	IO_L12P_T1_MRCC_33
AC10	IO_L12N_T1_MRCC_33
AF11	IO_L13P_T2_MRCC_33
AE11	IO_L13N_T2_MRCC_33
AA11	IO_L14P_T2_SRCC_33
AA10	IO_L14N_T2_SRCC_33
AE13	IO_L15P_T2_DQS_33
AF13	IO_L15N_T2_DQS_33
AK14	IO_L16P_T2_33
AK13	IO_L16N_T2_33
Y11	IO_L17P_T2_33
Y10	IO_L17N_T2_33
AA12	IO_L18P_T2_33
AB12	IO_L18N_T2_33
AJ14	IO_L19P_T3_33
AH14	IO_L19N_T3_VREF_33
AB13	IO_L20P_T3_33
AA13	IO_L20N_T3_33
AC11	IO_L21P_T3_DQS_33
AC12	IO_L21N_T3_DQS_33
AJ13	IO_L22P_T3_33
AJ12	IO_L22N_T3_33
AF12	IO_L23P_T3_33
AG12	IO_L23N_T3_33
AG13	IO_L24P_T3_33
AH12	IO_L24N_T3_33
AD13	IO_25_VRP_33

Pin	Signal
AA9	VCCO_33_1
AC13	VCCO_33_2
AD10	VCCO_33_3
AG11	VCCO_33_4
AK12	VCCO_33_5
Y12	VCCO_33_6

HP_BANK

XC7K325T_FFG900

TO EXTENSION MODUL

IO EXT_K7_P<23..0>

IO EXT_K7_N<23..0>

11

U3

1V8_C

Pin	Signal
AC6	IO_0_VRN_34
AD4	IO_L1P_T0_34
AD3	IO_L1N_T0_34
AC2	IO_L2P_T0_34
AC1	IO_L2N_T0_34
AD2	IO_L3P_T0_DQS_34
AD1	IO_L3N_T0_DQS_34
AC5	IO_L4P_T0_34
AC4	IO_L4N_T0_34
AD6	IO_L5P_T0_34
AE6	IO_L5N_T0_34
AC7	IO_L6P_T0_34
AD7	IO_L6N_T0_VREF_34
AF3	IO_L7P_T1_34
AF2	IO_L7N_T1_34
AE1	IO_L8P_T1_34
AF1	IO_L8N_T1_34
AG4	IO_L9P_T1_DQS_34
AG3	IO_L9N_T1_DQS_34
AF4	IO_L10P_T1_34
AE3	IO_L10N_T1_34
AE5	IO_L11P_T1_SRCC_34
AF5	IO_L11N_T1_SRCC_34
AF6	IO_L12P_T1_MRCC_34
AG5	IO_L12N_T1_MRCC_34
AH4	IO_L13P_T2_MRCC_34
AJ4	IO_L13N_T2_MRCC_34
AH6	IO_L14P_T2_SRCC_34
AH5	IO_L14N_T2_SRCC_34
AG2	IO_L15P_T2_DQS_34
AH1	IO_L15N_T2_DQS_34
AH2	IO_L16P_T2_34
AJ2	IO_L16N_T2_34
AJ1	IO_L17P_T2_34
AK1	IO_L17N_T2_34
AJ3	IO_L18P_T2_34
AK3	IO_L18N_T2_34
AF8	IO_L19P_T3_34
AG8	IO_L19N_T3_VREF_34
AF7	IO_L20P_T3_34
AG7	IO_L20N_T3_34
AH7	IO_L21P_T3_DQS_34
AJ7	IO_L21N_T3_DQS_34
AJ6	IO_L22P_T3_34
AK6	IO_L22N_T3_34
AJ8	IO_L23P_T3_34
AK8	IO_L23N_T3_34
AK5	IO_L24P_T3_34
AK4	IO_L24N_T3_34
AB7	IO_25_VRP_34

Pin	Signal
AC3	VCCO_34_1
AE7	VCCO_34_2
AF4	VCCO_34_3
AG1	VCCO_34_4
AH8	VCCO_34_5
AJ5	VCCO_34_6
AK2	VCCO_34_7

HP_BANK

XC7K325T_FFG900

UNIVERSITY OF MAINZ	DRAWING TITLE: CONTROL EXTENSIONMODUL KINTEX7 ---> VIRTEX7		
BLOCK: CONTROL KINTEX7 CONTROL	SIZE C	REV.	DRAWING NO.
	SCALE		SHEET OF

REVISIONS				
ZONE	LTR	DESCRIPTION	DATE	APPR.

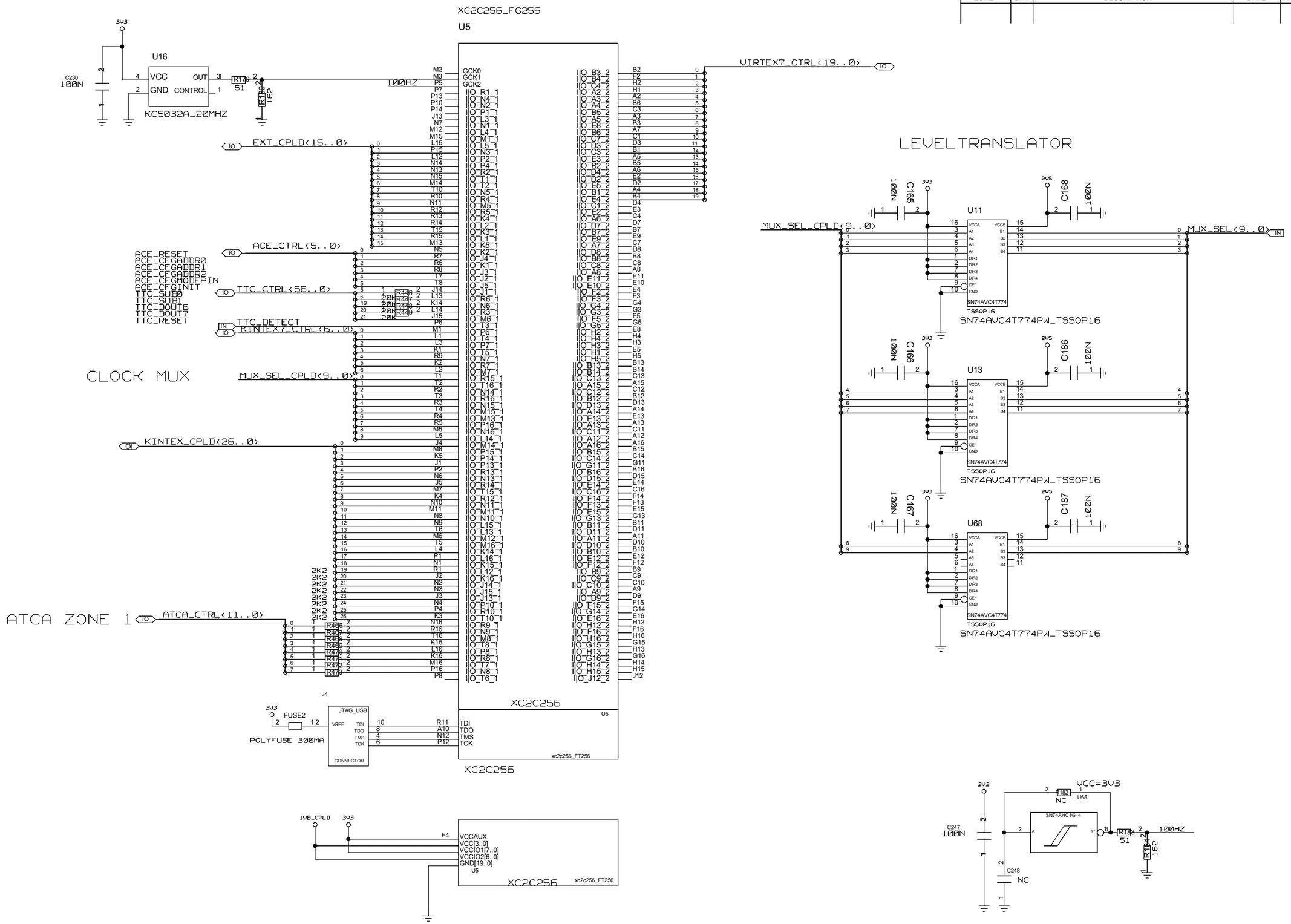

UNIVERSITY OF MAINZ	DRAWING TITLE: CPLD
BLOCK: CONTROL CPLD	SIZE: C · REV.: 28.05.2014 · DRAWING NO.
	SCALE · SHEET OF

REVISIONS				
ZONE	LTR	DESCRIPTION	DATE	APPR.

IPMC MOLEX_87782-3003

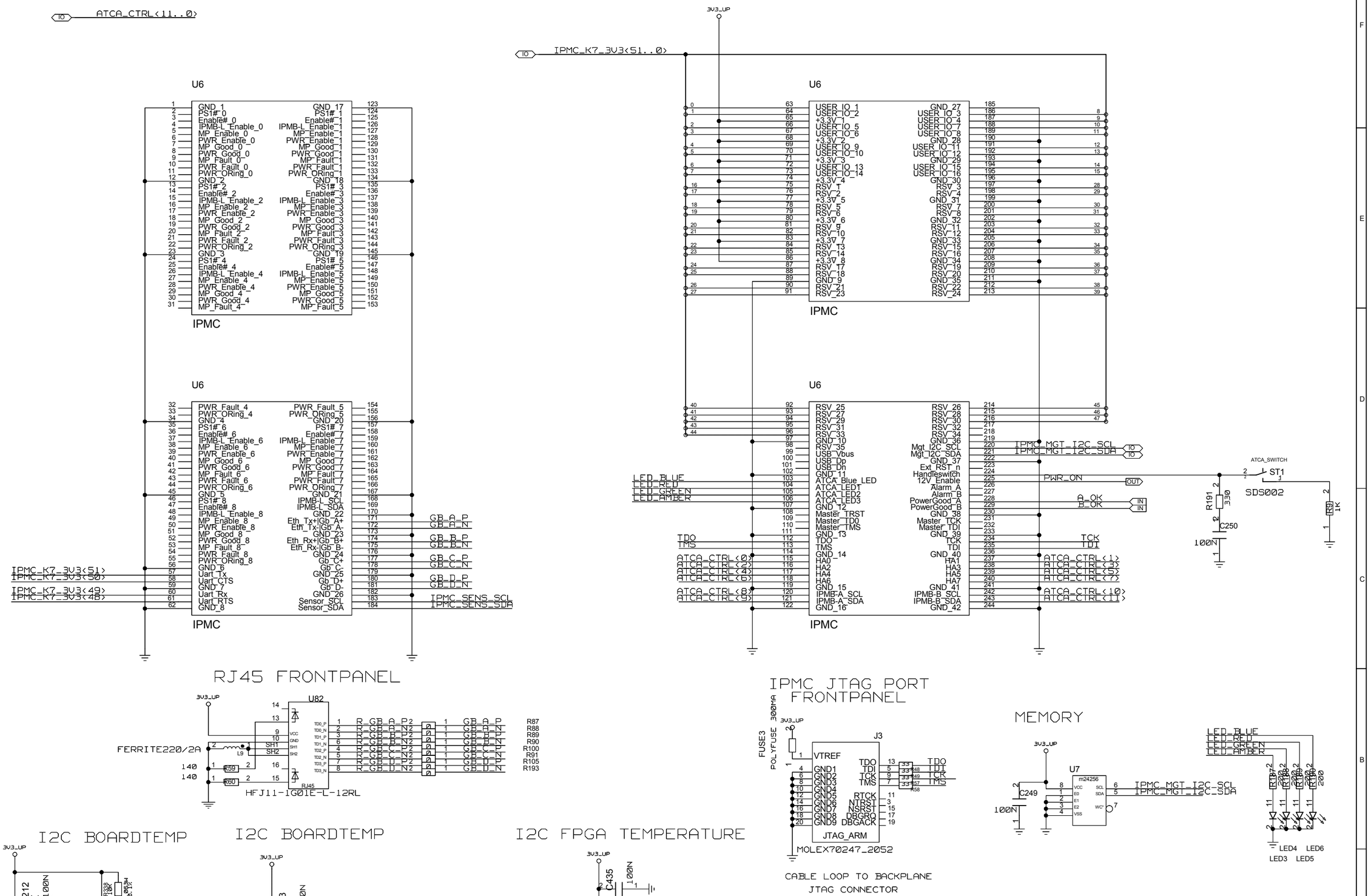

RJ45 FRONTPANEL

IPMC JTAG PORT FRONTPANEL

MEMORY

I2C BOARDTEMP

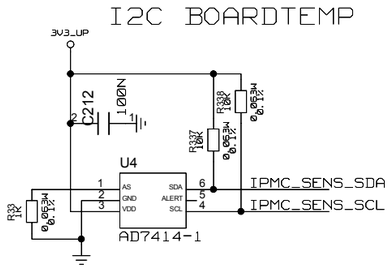

I2C BOARDTEMP

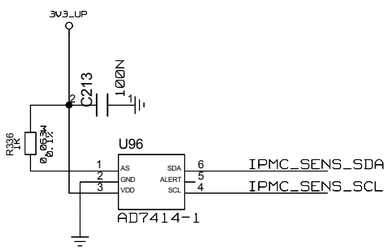

I2C FPGA TEMPERATURE

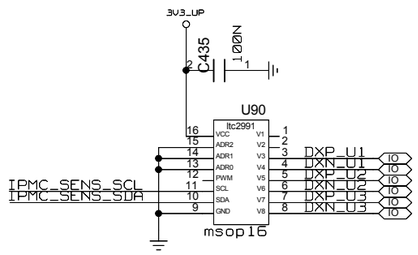

UNIVERSITY OF MAINZ	DRAWING TITLE: ATCA CONTROL
BLOCK: CONTROL IPMC	SIZE: C · REV. · DRAWING NO.
	SCALE · SHEET OF

REVISIONS				
ZONE	LTR	DESCRIPTION	DATE	APPR.

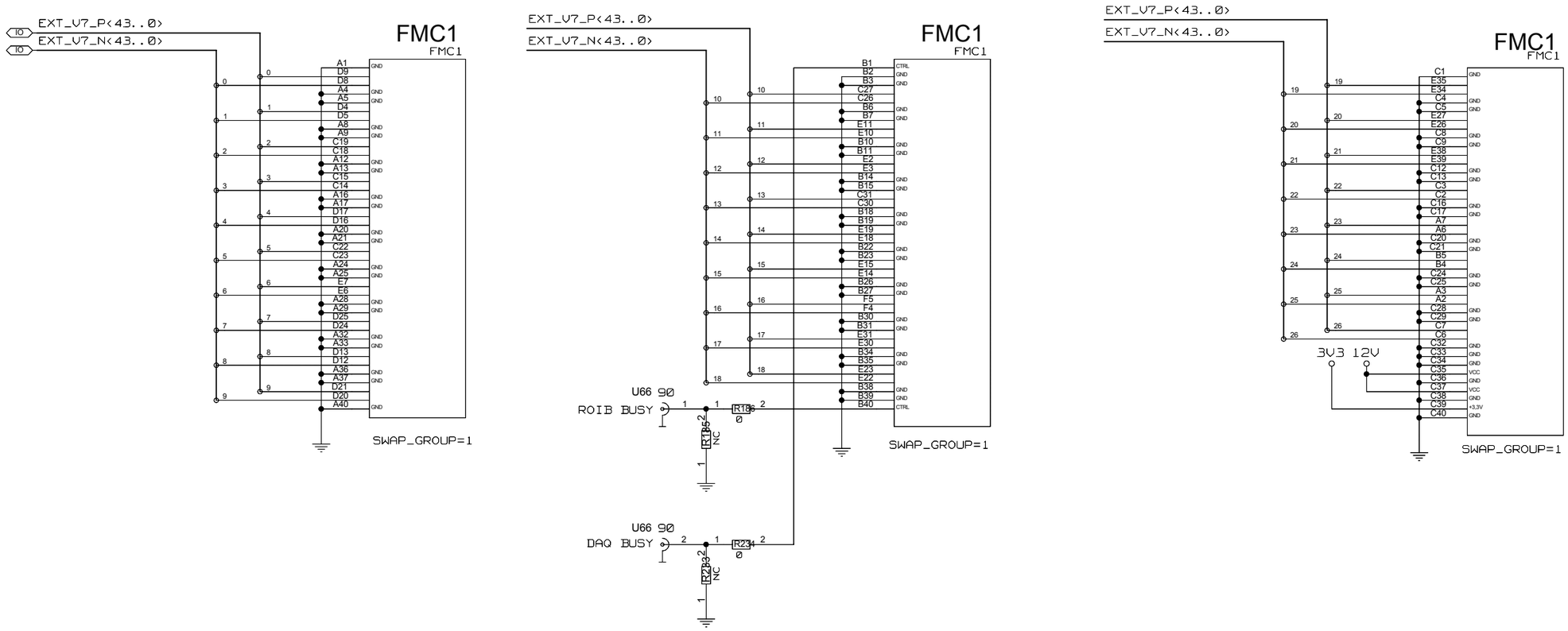

UNIVERSITY OF MAINZ	DRAWING TITLE: EXTENSION MODUL		
BLOCK: CONTROL EXTENSION_MODUL	SIZE C	REV.	DRAWING NO.
	SCALE		SHEET OF

REVISIONS				
ZONE	LTR	DESCRIPTION	DATE	APPR.

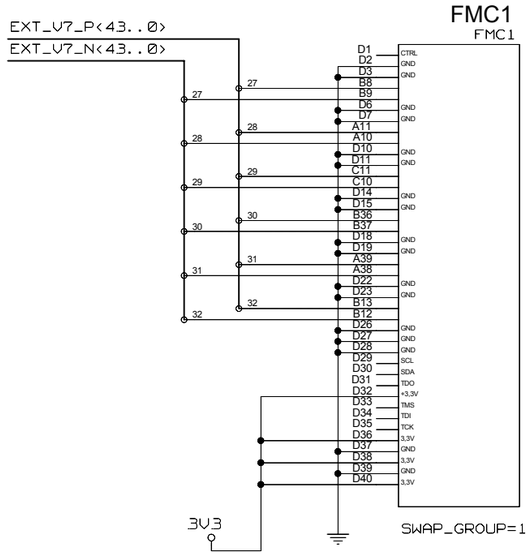

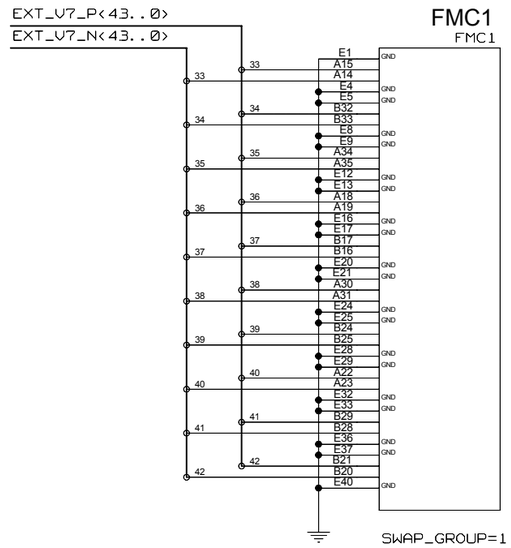

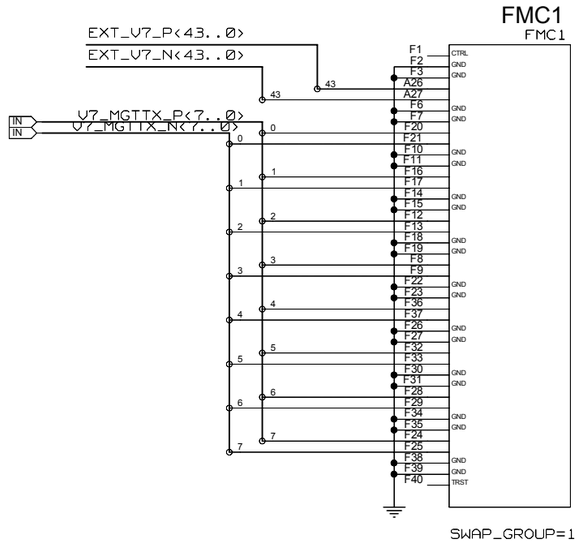

UNIVERSITY OF MAINZ	DRAWING TITLE: EXTENSION MODUL		
BLOCK: CONTROL EXTENSION_MODUL	SIZE C	REV.	DRAWING NO.
	SCALE		SHEET OF

REVISIONS				
ZONE	LTR	DESCRIPTION	DATE	APPR.

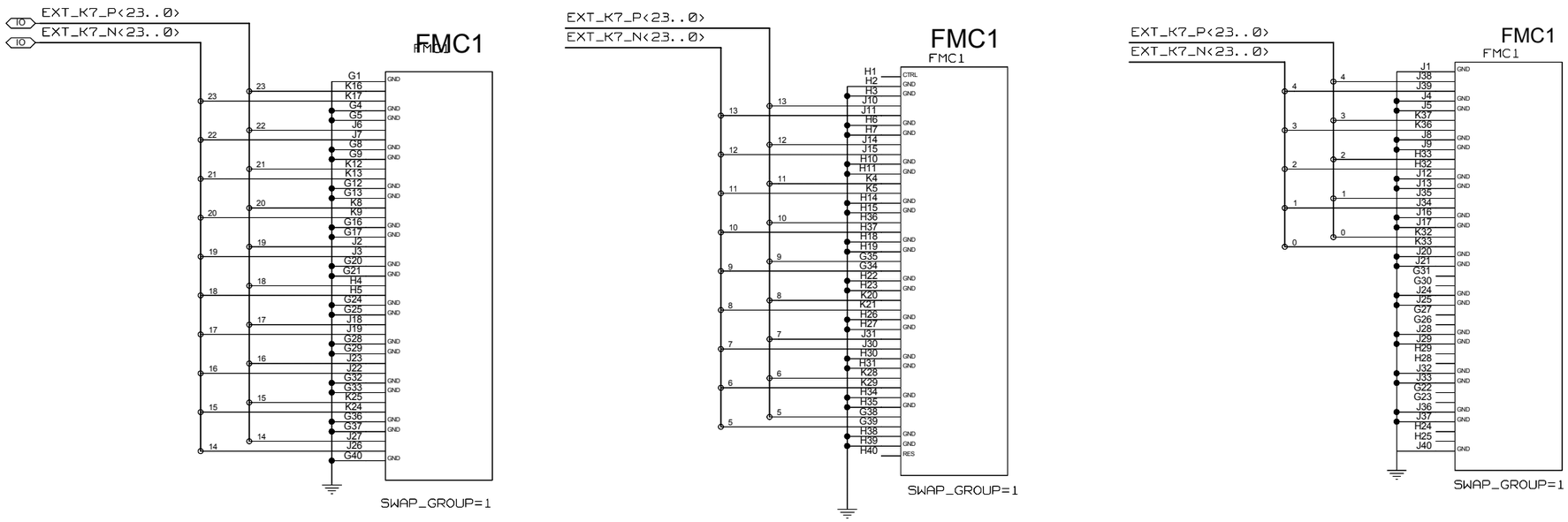

UNIVERSITY OF MAINZ	DRAWING TITLE: EXTENSION MODUL		
BLOCK: CONTROL EXTENSION_MODUL	SIZE: C	REV.	DRAWING NO.
	SCALE		SHEET OF

REVISIONS				
ZONE	LTR	DESCRIPTION	DATE	APPR.

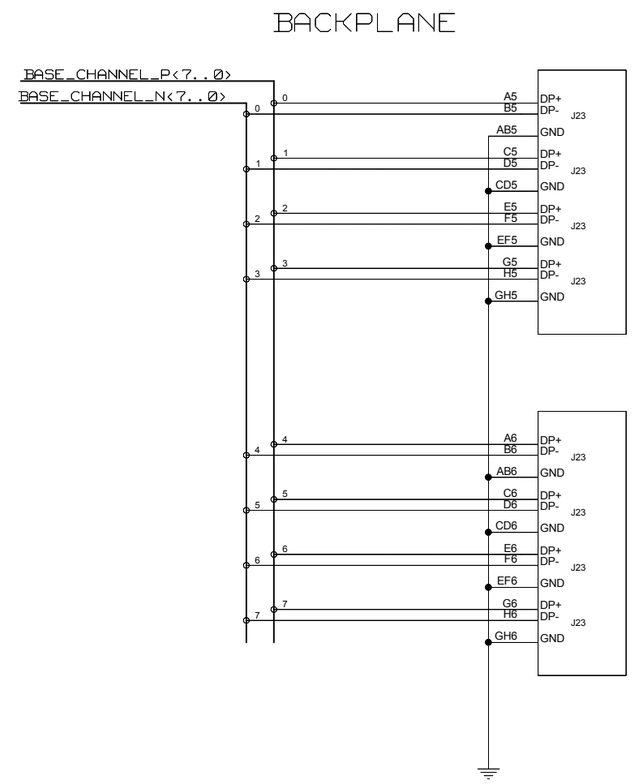

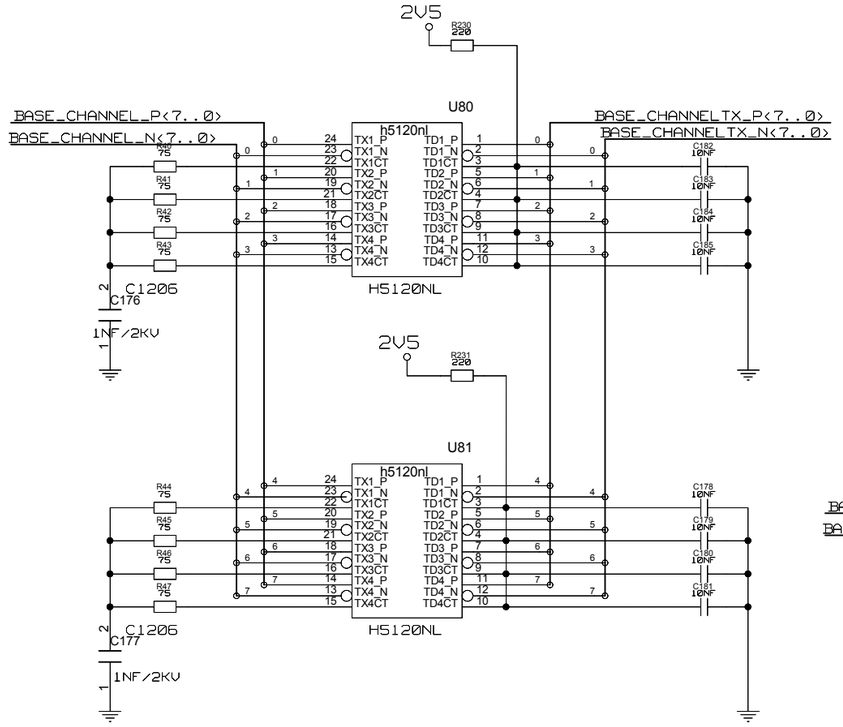

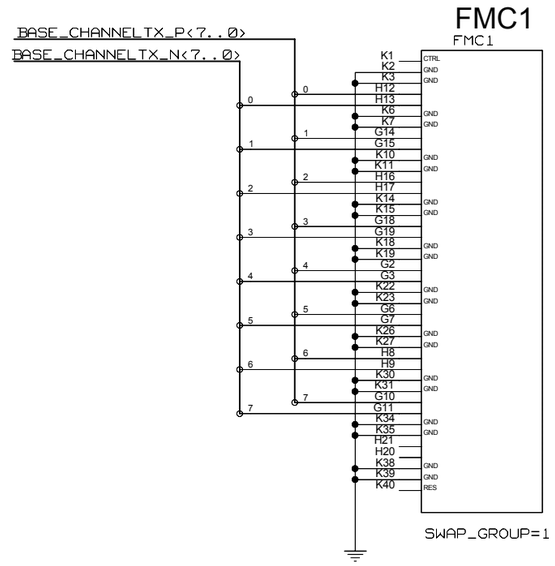

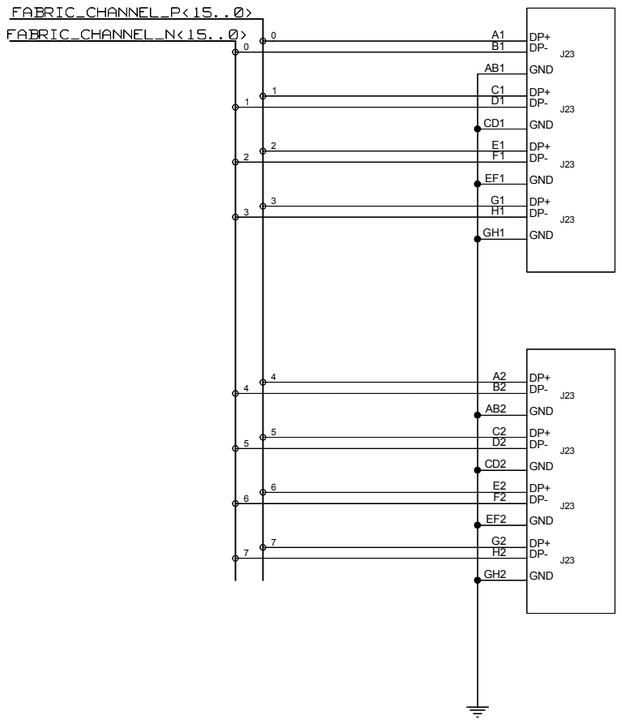

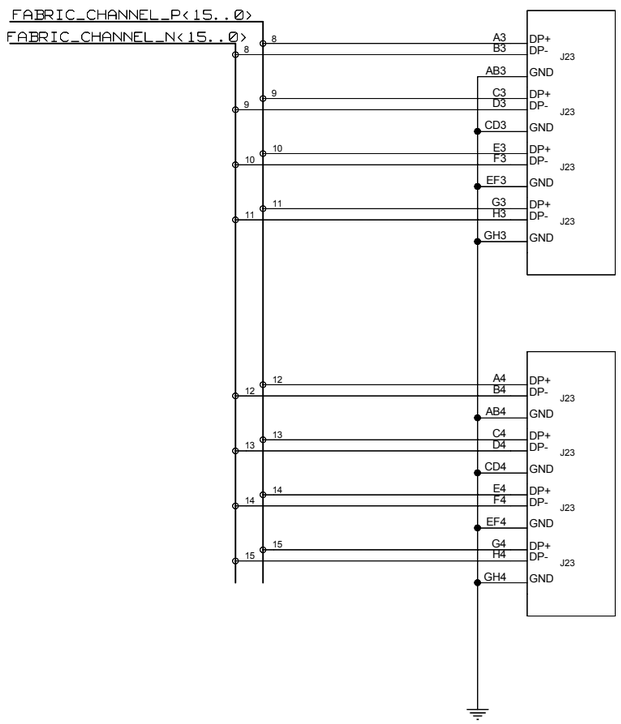

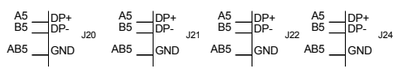

UNIVERSITY OF MAINZ

BLOCK: CONTROL EXTENSION_MODUL

DRAWING TITLE: EXTENSION MODUL

SIZE: C | REV. | DRAWING NO.

SCALE | SHEET OF

REVISIONS				
ZONE	LTR	DESCRIPTION	DATE	APPR.

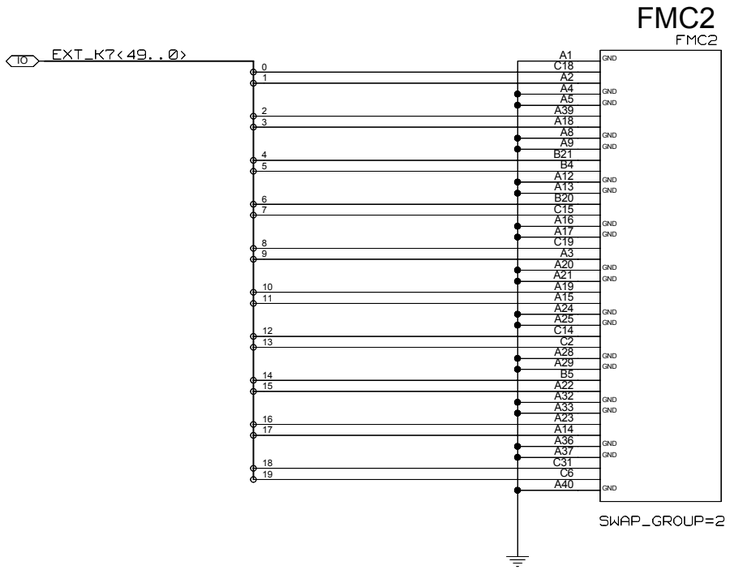

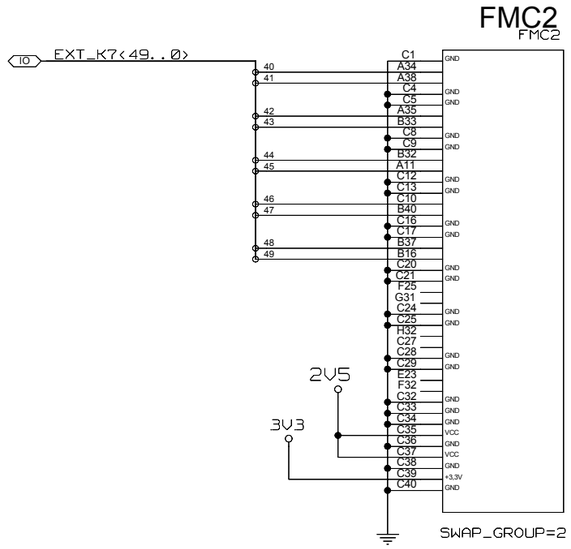

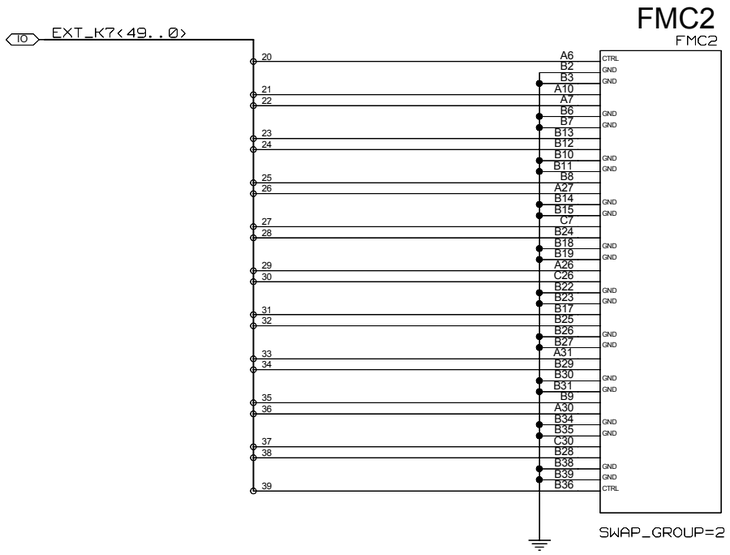

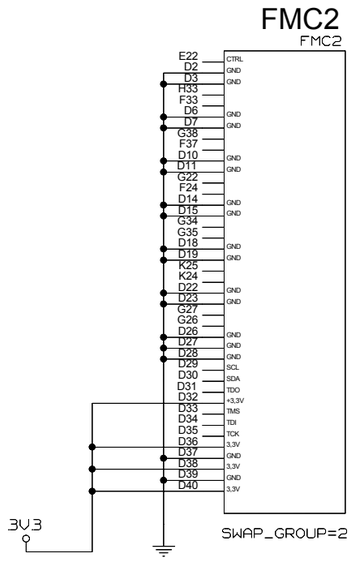

UNIVERSITY OF MAINZ	DRAWING TITLE: EXTENSION MODUL		
BLOCK: CONTROL EXTENSION_MODUL	SIZE C	REV.	DRAWING NO.
	SCALE		SHEET OF

REVISIONS				
ZONE	LTR	DESCRIPTION	DATE	APPR.

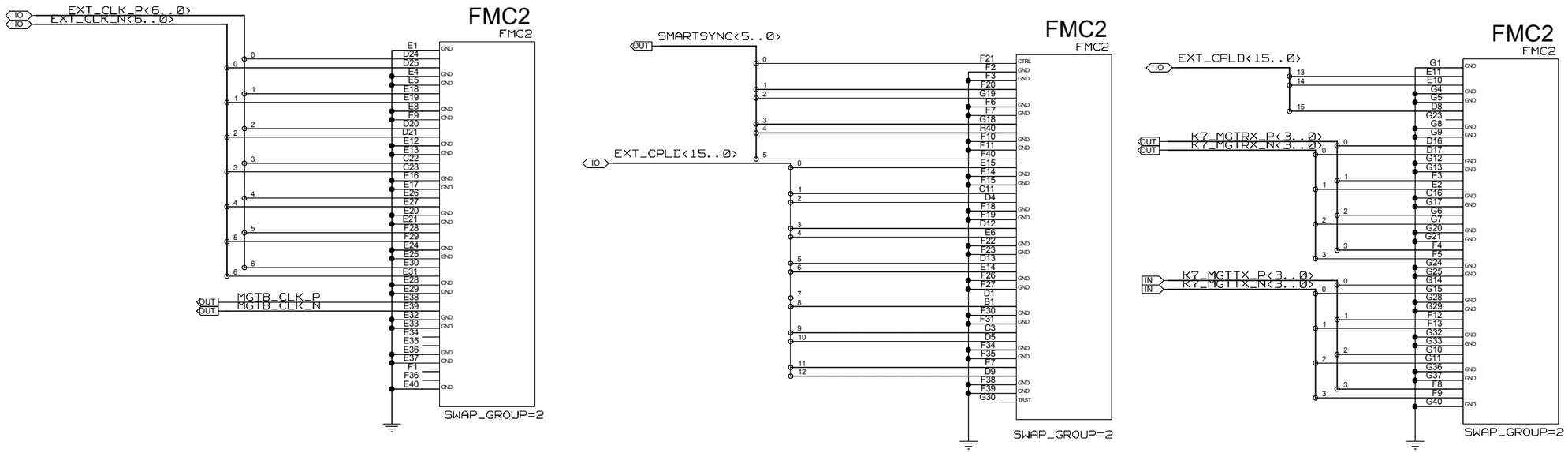

UNIVERSITY OF MAINZ	DRAWING TITLE: EXTENSION MODUL		
BLOCK: CONTROL EXTENSION_MODUL	SIZE C	REV.	DRAWING NO.
	SCALE		SHEET OF

REVISIONS				
ZONE	LTR	DESCRIPTION	DATE	APPR.

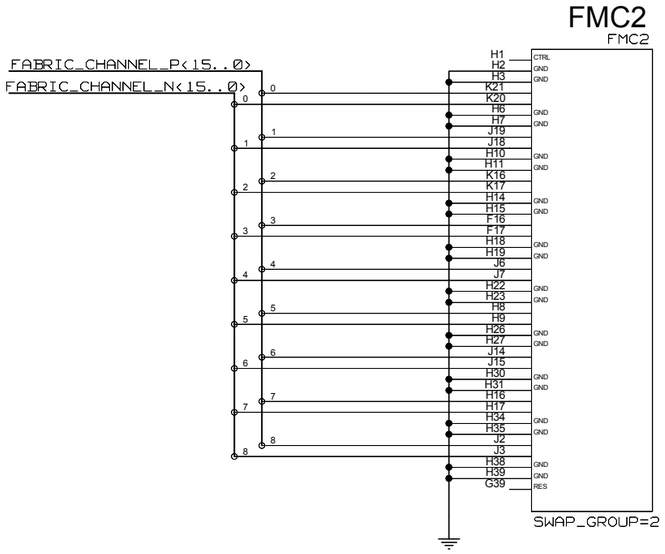

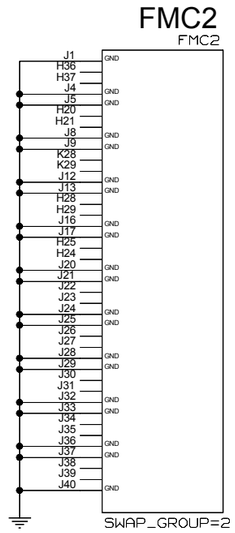

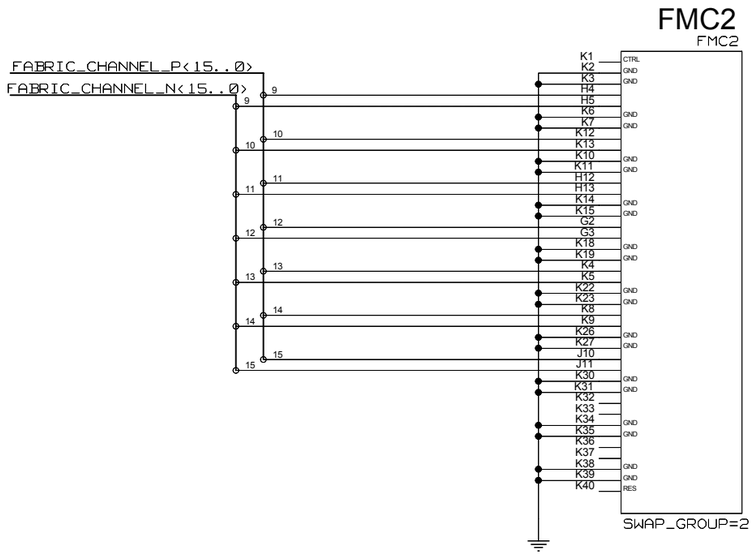

UNIVERSITY OF MAINZ	DRAWING TITLE: EXTENSION MODUL		
BLOCK: CONTROL EXTENSION_MODUL	SIZE: C	REV.	DRAWING NO.
	SCALE		SHEET OF