REVISIONS				
ZONE	LTR	DESCRIPTION	DATE	APPR.

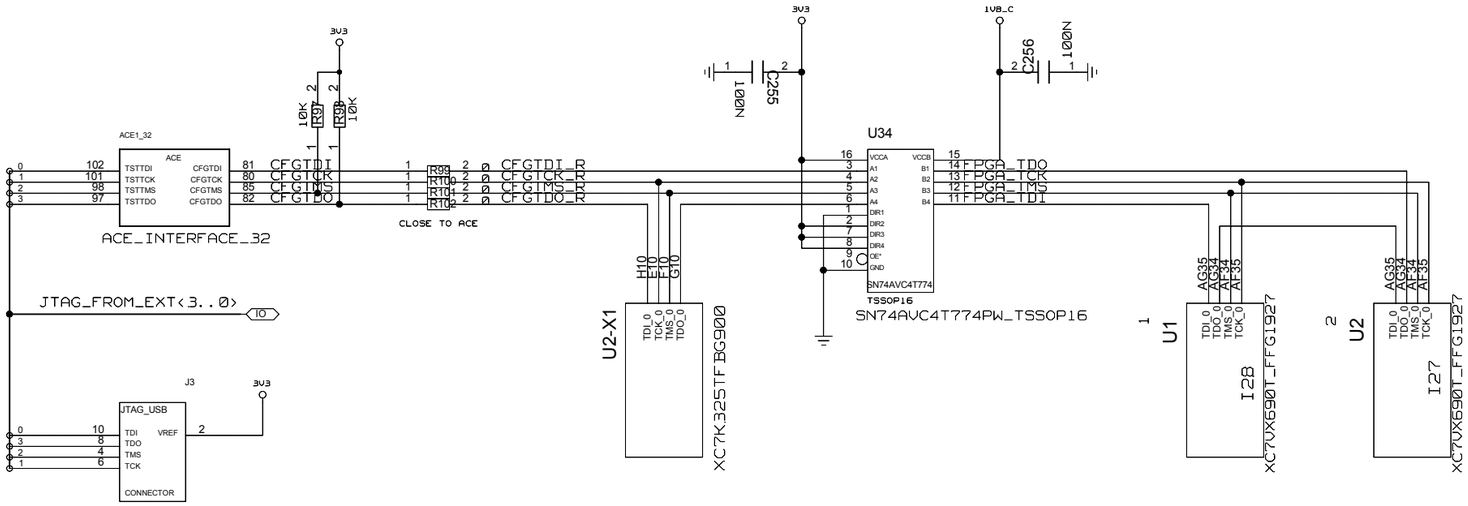

ACE_CDA<0>	R10_1_32.2	U37.J5	ACE_CTRL0
ACE_CDA<1>	ACE1_32.33	U37.T5	ACE_CTRL1
ACE_CDA<2>	ACE1_32.42	U37.R7	ACE_CTRL2
ACE_CDA<3>	ACE1_32.76	U37.R2	ACE_CTRL3
ACE_CDA<4>	ACE1_32.77	U37.P4	ACE_CTRL4
ACE_CDA<5>	ACE1_32.39	U37.T7	ACE_CTRL5
ACE_CDA<6>	ACE1_32.86	U37.L4	ACE_CTRL6
ACE_CDA<7>	ACE1_32.87	U37.L3	ACE_CTRL7
ACE_CDA<8>	ACE1_32.88	U37.J4	ACE_CTRL8
ACE_CDA<9>	ACE1_32.89	U37.J3	ACE_CTRL9
ACE_CDA<10>	ACE1_32.78	U37.P2	ACE_CTRL10
ACE_CDA<11>	ACE1_32.79	U37.N3	ACE_CTRL11
ACE_CDA<12>	ACE1_32.66	U37.R3	ACE_DATA0
ACE_CDA<13>	ACE1_32.65	U37.P8	ACE_DATA1
ACE_CDA<14>	ACE1_32.63	U37.N8	ACE_DATA2
ACE_CDA<15>	ACE1_32.62	U37.T3	ACE_DATA3
ACE_CDA<16>	ACE1_32.61	U37.R9	ACE_DATA4
ACE_CDA<17>	ACE1_32.60	U37.R4	ACE_DATA5
ACE_CDA<18>	ACE1_32.59	U37.N9	ACE_DATA6
ACE_CDA<19>	ACE1_32.58	U37.T4	ACE_DATA7
ACE_CDA<20>	ACE1_32.70	U37.T1	ACE_ADDR0
ACE_CDA<21>	ACE1_32.69	U37.R8	ACE_ADDR1
ACE_CDA<22>	ACE1_32.68	U37.T2	ACE_ADDR2
ACE_CDA<23>	ACE1_32.67	U37.T8	ACE_ADDR3
ACE_CDA<24>	ACE1_32.45	U37.R5	ACE_ADDR4
ACE_CDA<25>	ACE1_32.44	U37.R6	ACE_ADDR5
ACE_CDA<26>	ACE1_32.43	U37.T6	ACE_ADDR6

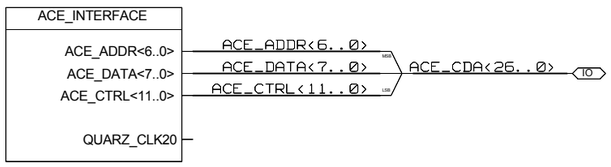

UNIVERSITY OF MAINZ

BLOCK: CONTROL
JTAG

DRAWING TITLE

JTAG + ACE INTERFACE

SIZE C | REV. | DRAWING NO.

SCALE | SHEET OF