REVISIONS				
ZONE	LTR	DESCRIPTION	DATE	APPR.

PARALLEL I/O

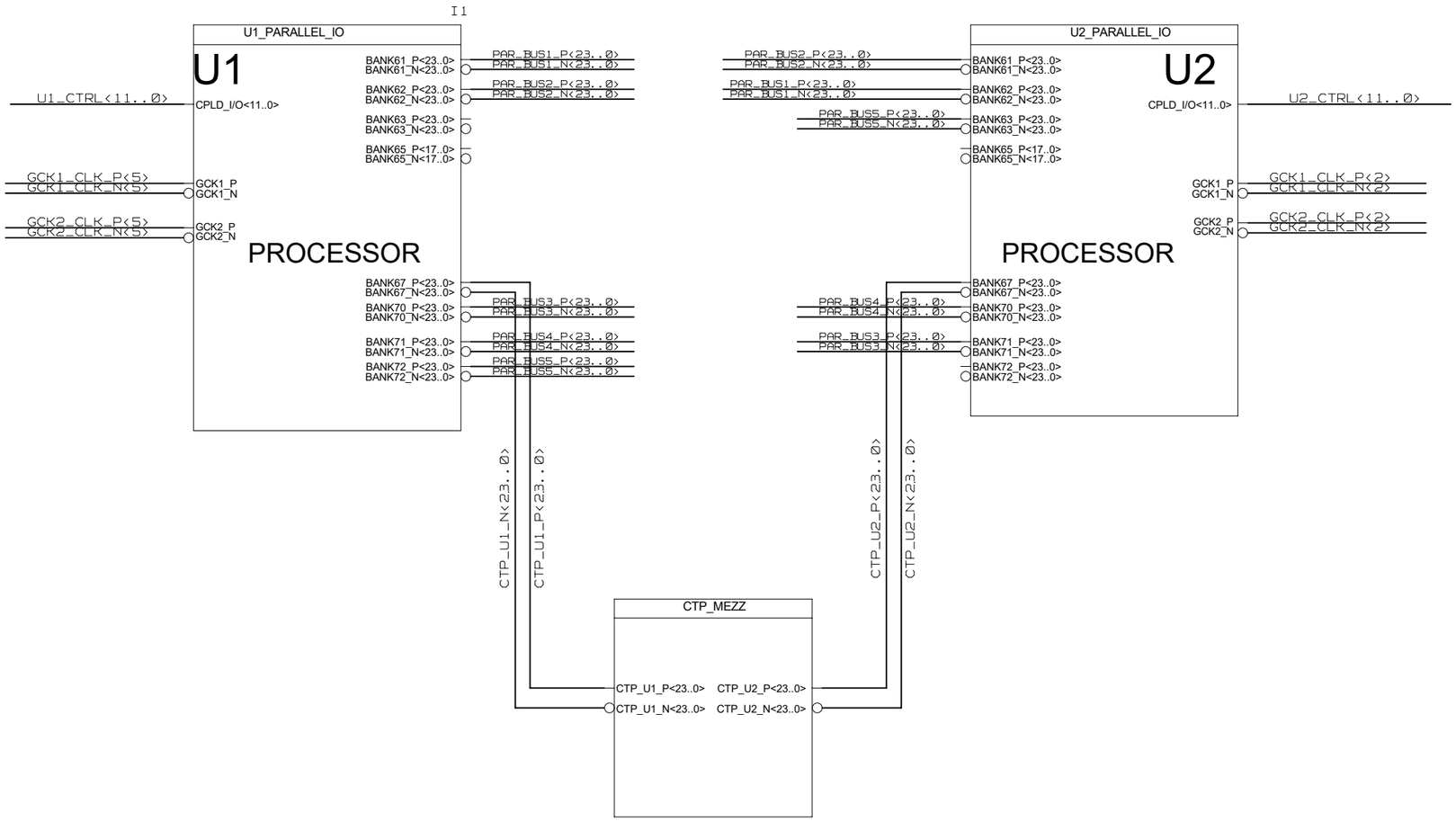

	NAME	DATE	SIGN
CHECKED	J. V.DE SOUZA		
CHECKED	U.SCHAEFER		
CHECKED	S.RAVE		
DRAWN	BAUSS		

BLOCK TITLE

DRAWING TITLE

TOPO_L2

UNIVERSITY OF MAINZ

SIZE C | REV. | DRAWING NO.

SCALE | SHEET OF

REVISIONS				
ZONE	LTR	DESCRIPTION	DATE	APPR.

MGT REAL TIME

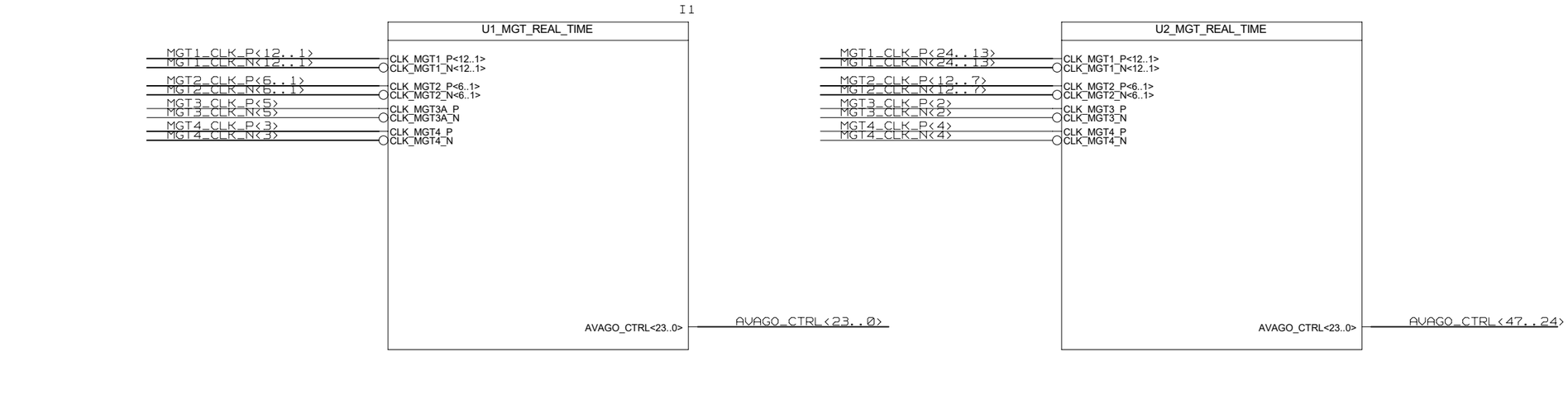

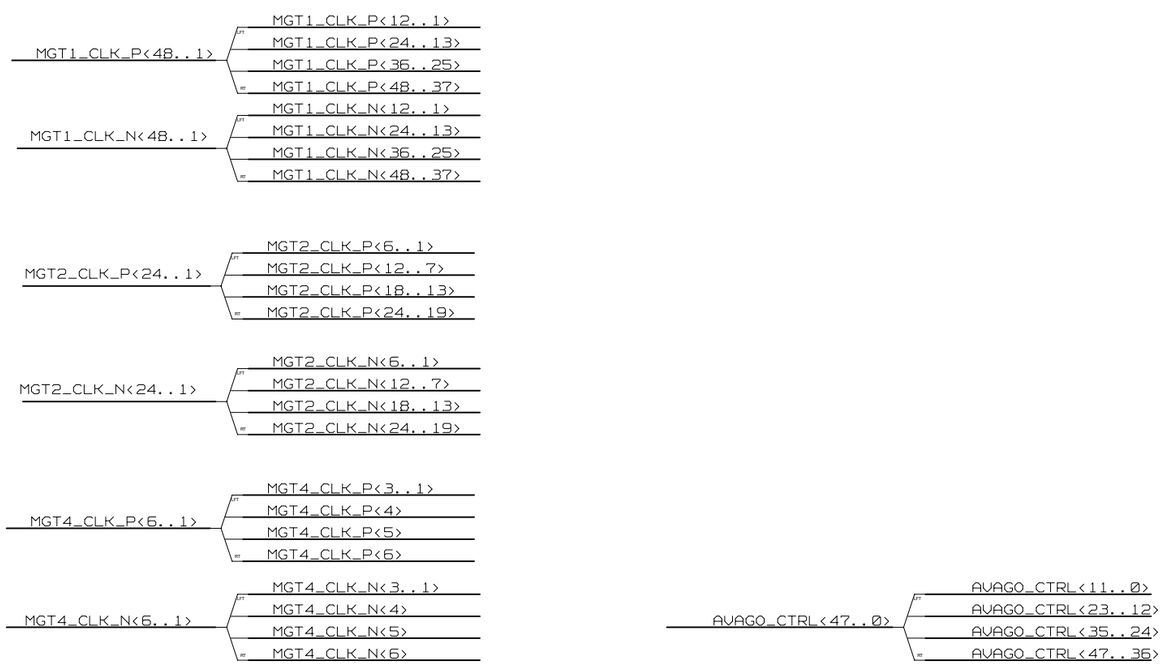

	NAME	DATE	SIGN
CHECKED	J. V.DE SOUZA		
CHECKED	U.SCHAEFER		
CHECKED	S.RAVE		
DRAWN	BAUSS		
BLOCK TITLE			

DRAWING TITLE

TOPO_L2

UNIVERSITY OF MAINZ

SIZE C | REV. | DRAWING NO.

SCALE | SHEET OF

REVISIONS				
ZONE	LTR	DESCRIPTION	DATE	APPR.

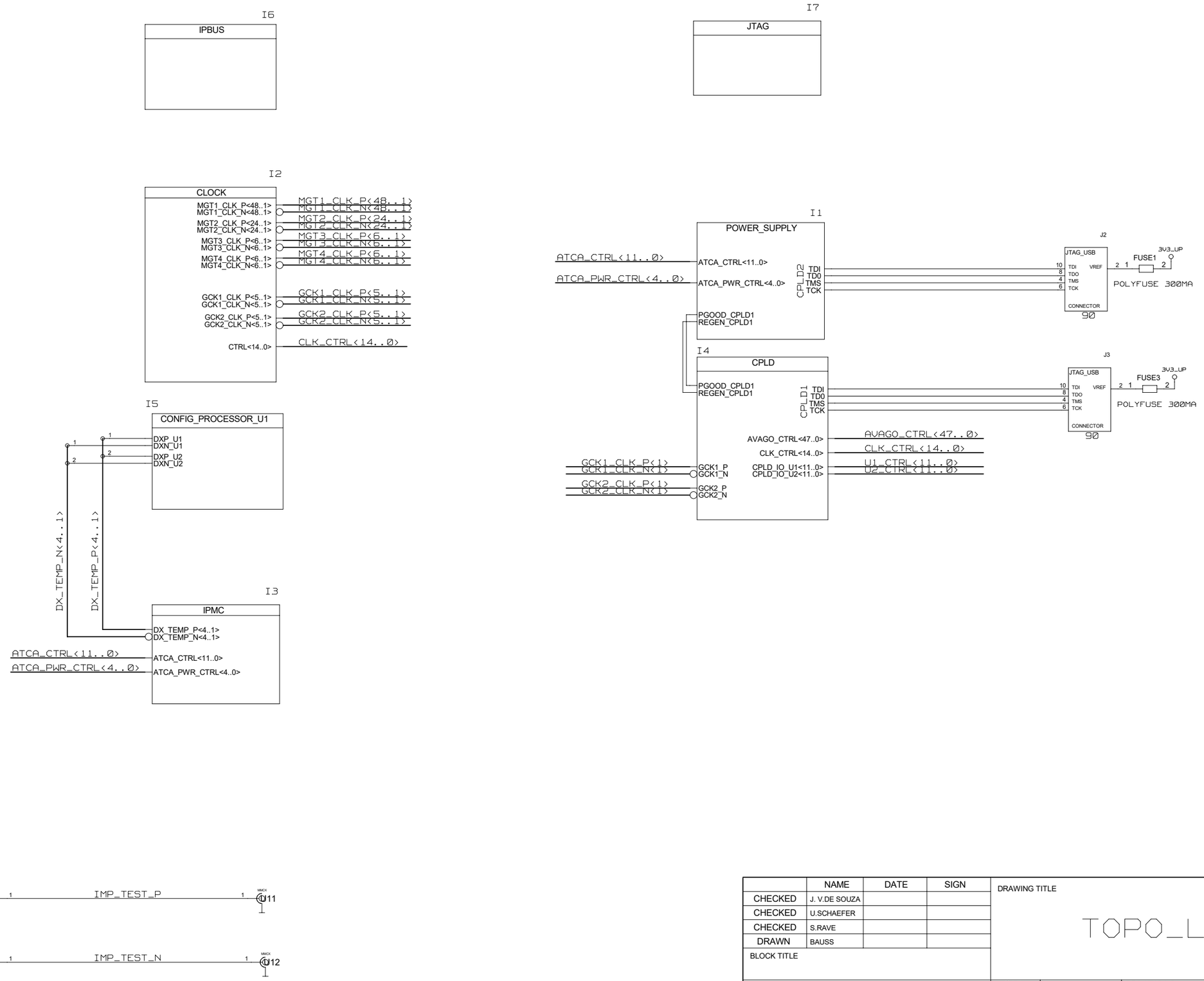

	NAME	DATE	SIGN
CHECKED	J. V.DE SOUZA		
CHECKED	U.SCHAEFER		
CHECKED	S.RAVE		
DRAWN	BAUSS		

BLOCK TITLE

DRAWING TITLE

TOPO_L2

UNIVERSITY OF MAINZ

SIZE C | REV. | DRAWING NO.

SCALE | SHEET OF

REVISIONS				
ZONE	LTR	DESCRIPTION	DATE	APPR.

MEZZANINE CONNECTOR GND AND VCC

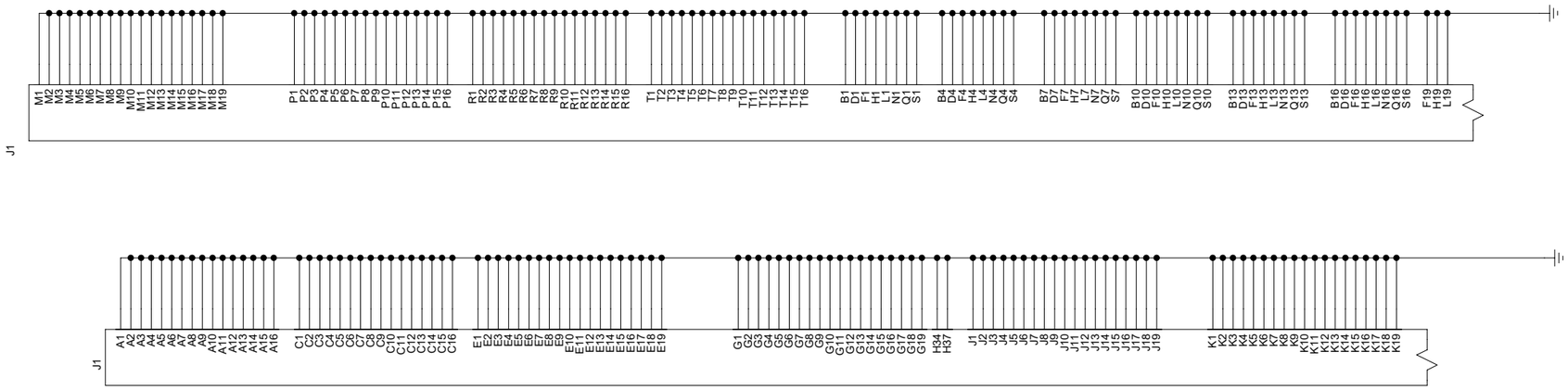

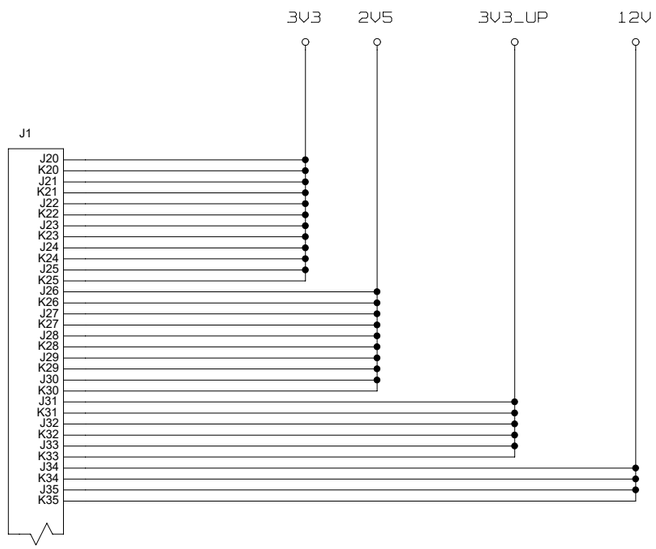

	NAME	DATE	SIGN
CHECKED	J. V.DE SOUZA		
CHECKED	U.SCHAEFER		
CHECKED	S.RAVE		
DRAWN	BAUSS		
BLOCK TITLE			

DRAWING TITLE

TOPO_L2

UNIVERSITY OF MAINZ

SIZE C | REV. | DRAWING NO.

SCALE | SHEET OF

REVISIONS				
ZONE	LTR	DESCRIPTION	DATE	APPR.

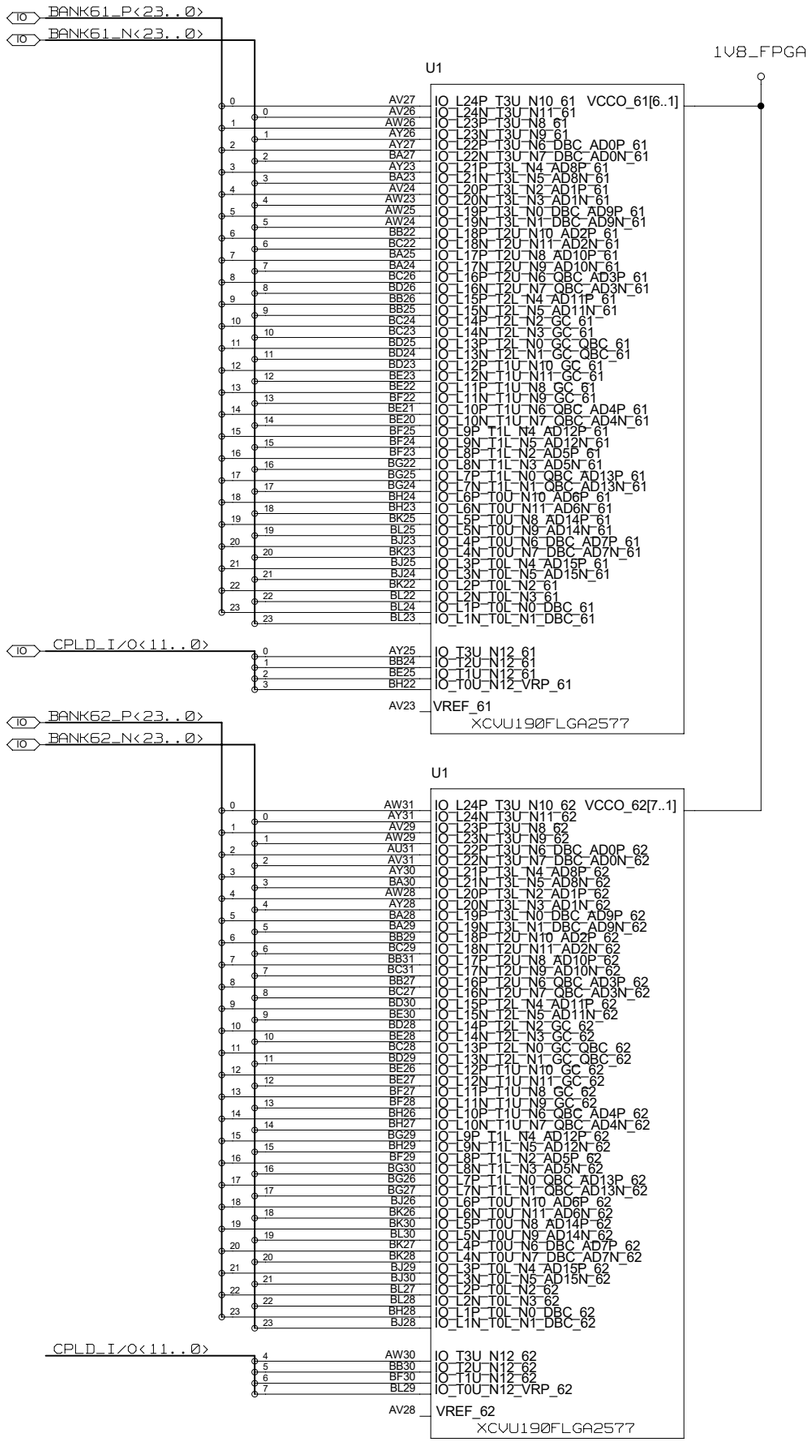

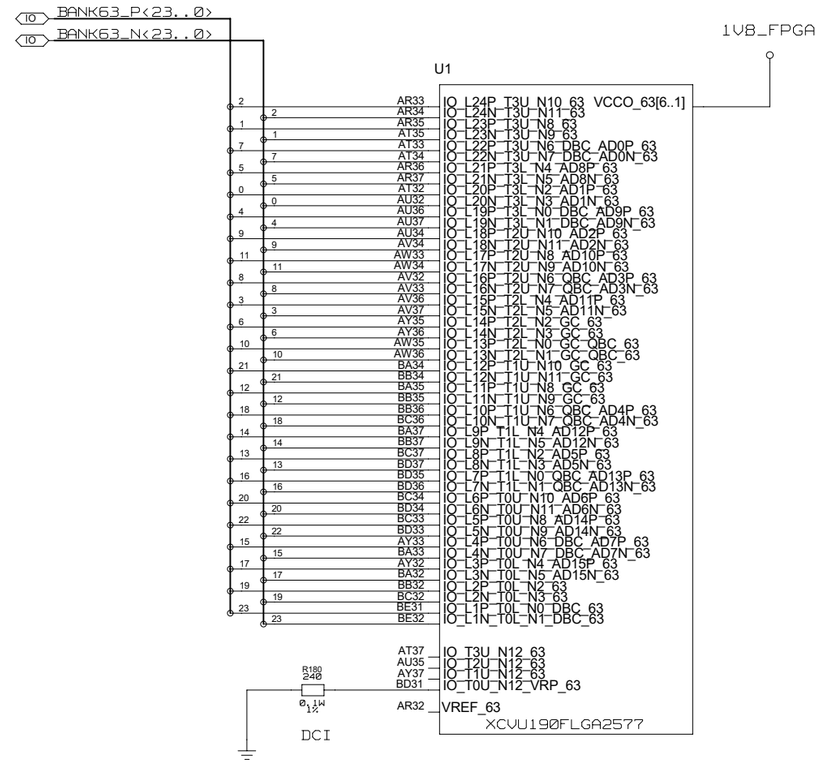

BANK
61
62
63

	NAME	DATE	SIGN
CHECKED	J. V.DE SOUZA		
CHECKED	U.SCHAEFER		
CHECKED	S.RAVE		
DRAWN	BAUSS	25.08.2015	

BLOCK TITLE
U1_PARALLEL_I/O

DRAWING TITLE
TOPO_L2

UNIVERSITY OF MAINZ

SIZE C | REV. | DRAWING NO.

SCALE | SHEET 1 OF 5

REVISIONS				
ZONE	LTR	DESCRIPTION	DATE	APPR.

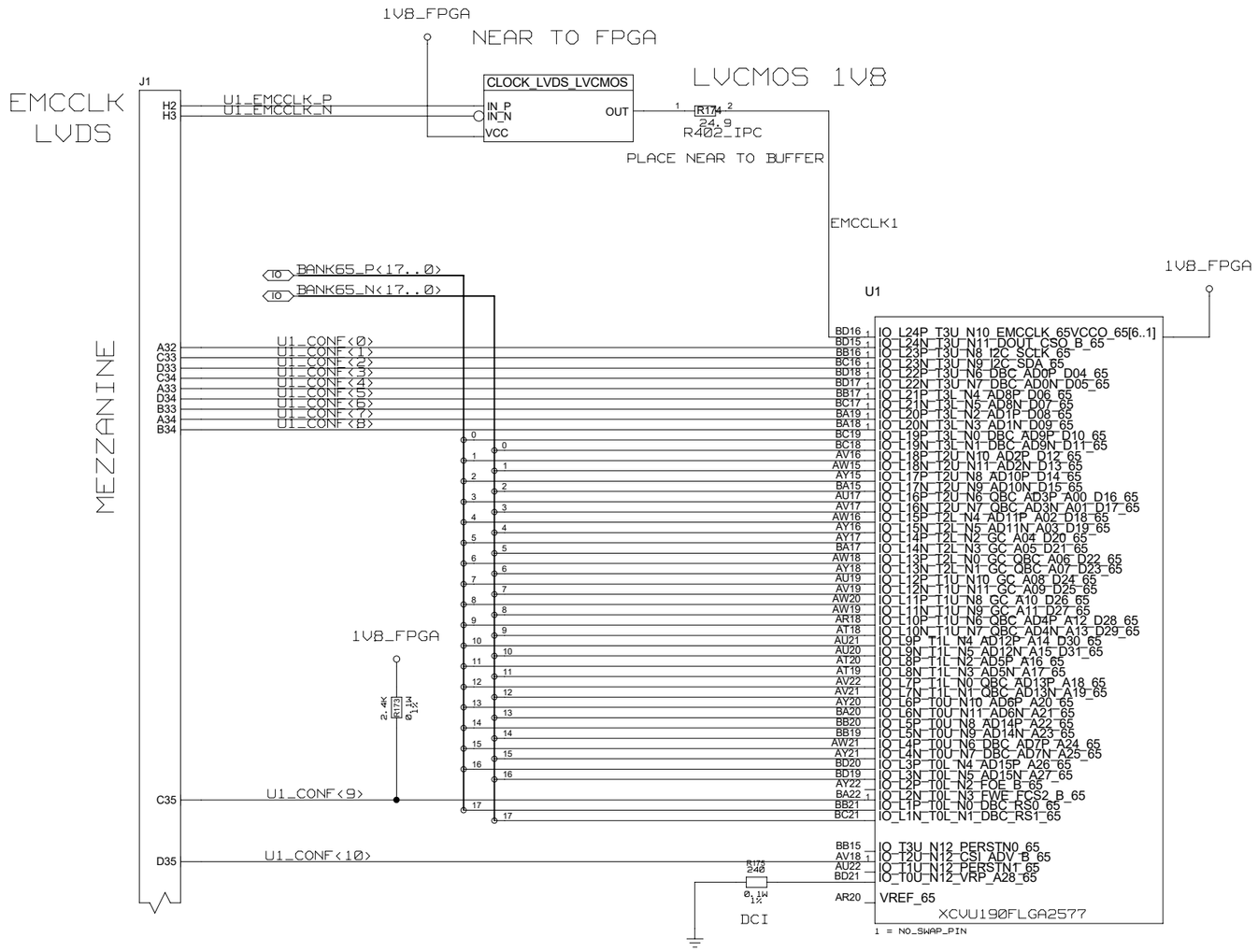

BANK
65

	NAME	DATE	SIGN
CHECKED	J. V.DE SOUZA		
CHECKED	U.SCHAEFER		
CHECKED	S.RAVE		
DRAWN	BAUSS	25.08.2015	

BLOCK TITLE
U1_PARALLEL_I/O

DRAWING TITLE
TOPO_L2

UNIVERSITY OF MAINZ

SIZE C | REV. | DRAWING NO.

SCALE | SHEET 2 OF 5

REVISIONS				
ZONE	LTR	DESCRIPTION	DATE	APPR.

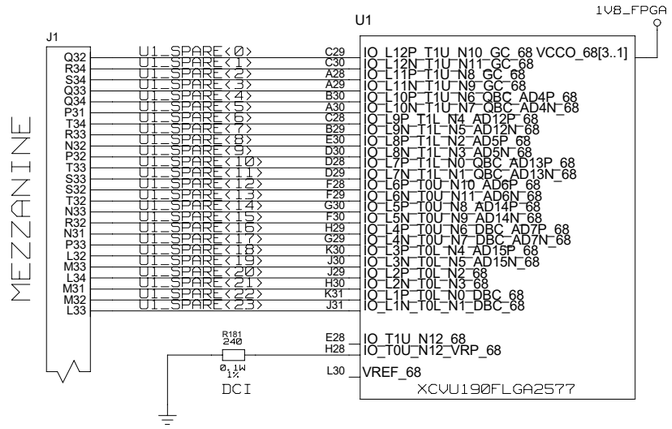

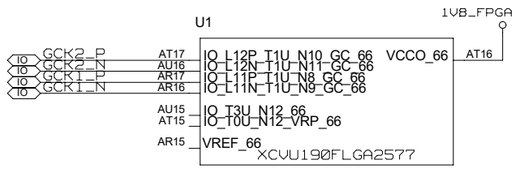

BANK
66
68

	NAME	DATE	SIGN
CHECKED	J. V.DE SOUZA		
CHECKED	U.SCHAEFER		
CHECKED	S.RAVE		
DRAWN	BAUSS	25.08.2015	

BLOCK TITLE
U1_PARALLEL_I/O

DRAWING TITLE
TOPO_L2

UNIVERSITY OF MAINZ

SIZE C | REV. | DRAWING NO.

SCALE | SHEET 3 OF 5

REVISIONS				
ZONE	LTR	DESCRIPTION	DATE	APPR.

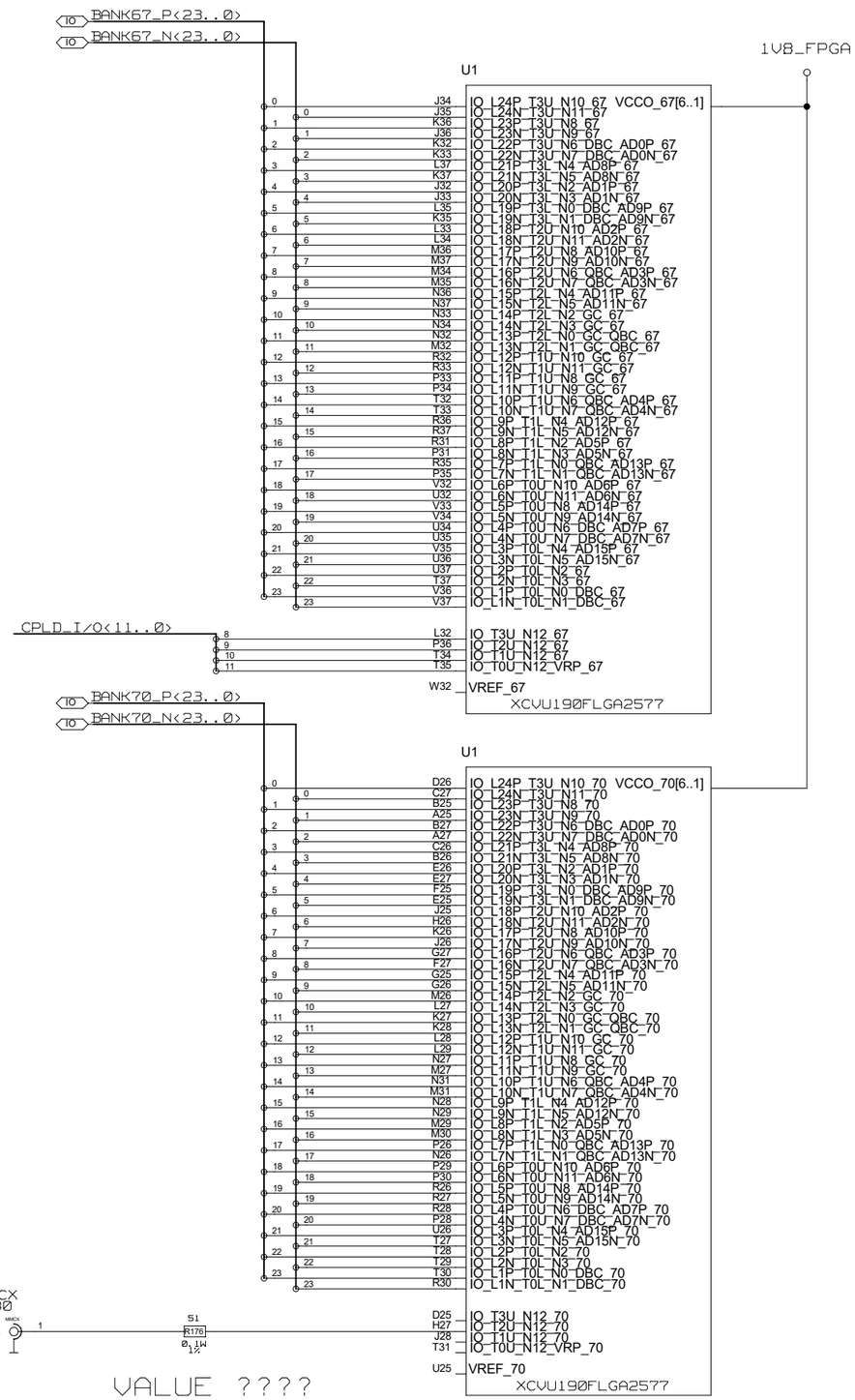

BANK
67
70

	NAME	DATE	SIGN
CHECKED	J. V.DE SOUZA		
CHECKED	U.SCHAEFER		
CHECKED	S.RAVE		
DRAWN	BAUSS	25.08.2015	

BLOCK TITLE
U1_PARALLEL_I/O

DRAWING TITLE
TOPO_L2

UNIVERSITY OF MAINZ

SIZE C | REV. | DRAWING NO.

SCALE | SHEET 4 OF 5

REVISIONS				
ZONE	LTR	DESCRIPTION	DATE	APPR.

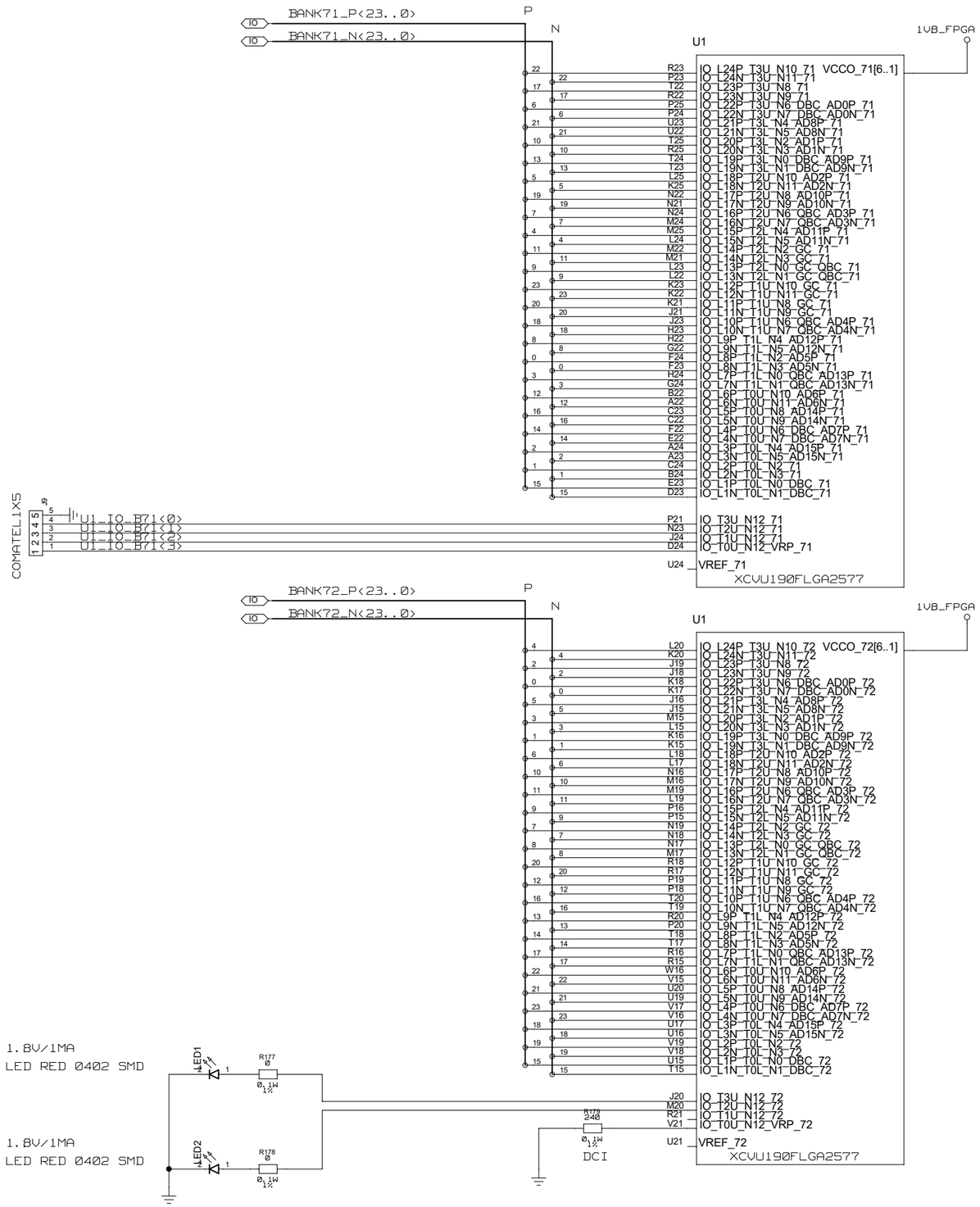

BANK
71
72

	NAME	DATE	SIGN
CHECKED	J. V.DE SOUZA		
CHECKED	U.SCHAEFER		
CHECKED	S.RAVE		
DRAWN	BAUSS	25.08.2015	

BLOCK TITLE
U1_PARALLEL_I/O

DRAWING TITLE
TOPO_L2

UNIVERSITY OF MAINZ

SIZE C | REV. | DRAWING NO.

SCALE | SHEET 5 OF 5

REVISIONS				
ZONE	LTR	DESCRIPTION	DATE	APPR.

CLOCK_LVDS_LVCMOS

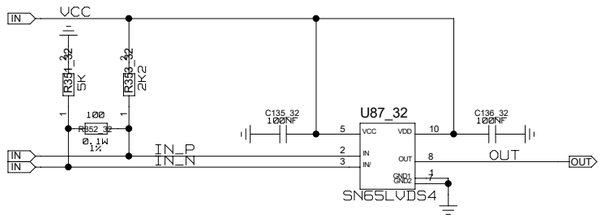

	NAME	DATE	SIGN
CHECKED	J. V.DE SOUZA		
CHECKED	U.SCHAEFER		
CHECKED	S.RAVE		
DRAWN	BAUSS		

BLOCK TITLE
CLOCK_LVDS_LVCMOS

DRAWING TITLE
TOPO_L2

UNIVERSITY OF MAINZ

SIZE C | REV. | DRAWING NO.

SCALE | SHEET OF

REVISIONS				
ZONE	LTR	DESCRIPTION	DATE	APPR.

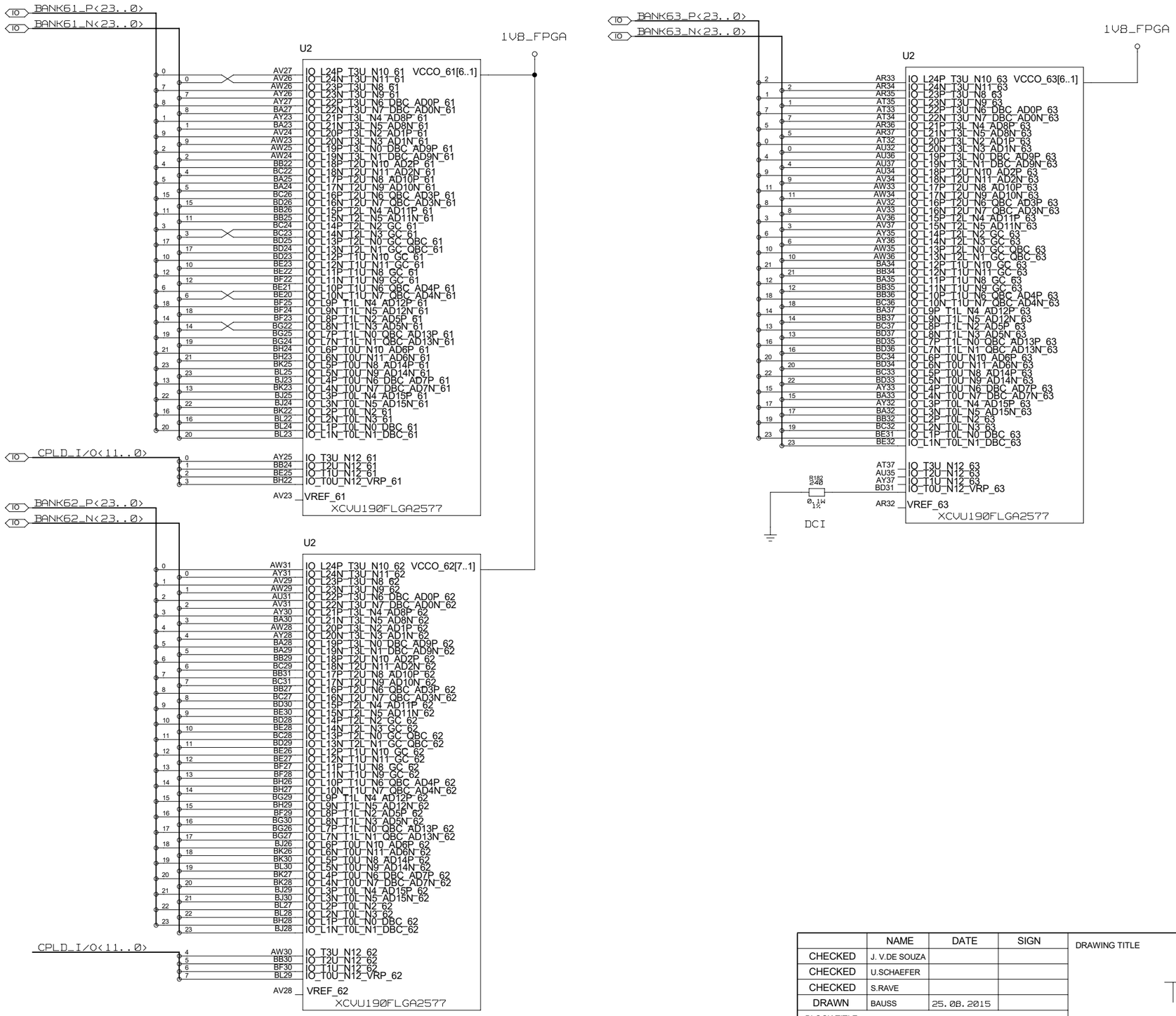

BANK
61
62
63

	NAME	DATE	SIGN
CHECKED	J. V.DE SOUZA		
CHECKED	U.SCHAEFER		
CHECKED	S.RAVE		
DRAWN	BAUSS	25.08.2015	

BLOCK TITLE: U2_PARALLEL_I/O

DRAWING TITLE: TOPO_L2

UNIVERSITY OF MAINZ

SIZE: C | REV. | DRAWING NO.

SCALE | SHEET 1 OF 5

REVISIONS				
ZONE	LTR	DESCRIPTION	DATE	APPR.

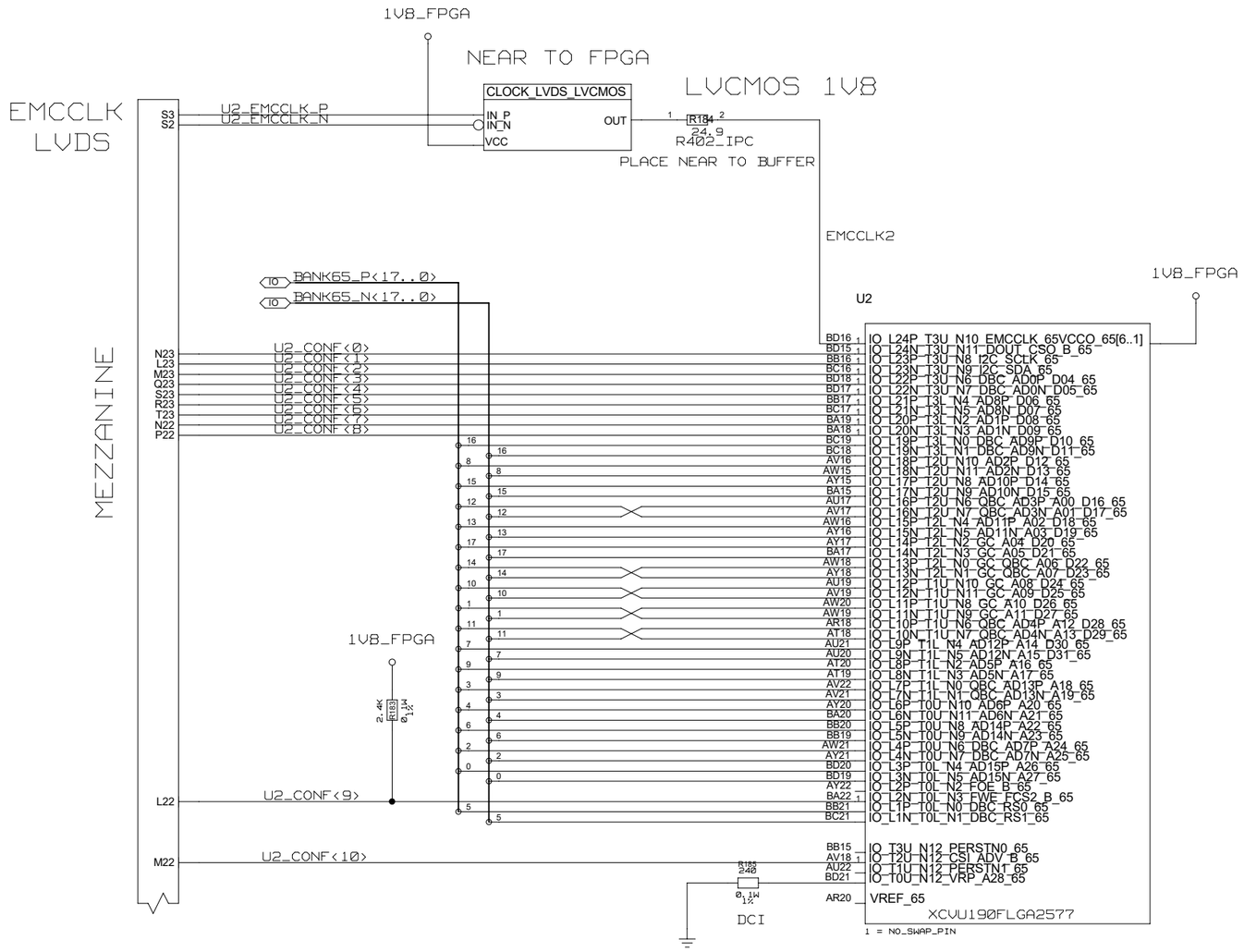

BANK
65

	NAME	DATE	SIGN
CHECKED	J. V.DE SOUZA		
CHECKED	U.SCHAEFER		
CHECKED	S.RAVE		
DRAWN	BAUSS	25.08.2015	

BLOCK TITLE
U2_PARALLEL_I/O

DRAWING TITLE
TOPO_L2

UNIVERSITY OF MAINZ

SIZE C | REV. | DRAWING NO.

SCALE | SHEET 2 OF 5

REVISIONS				
ZONE	LTR	DESCRIPTION	DATE	APPR.

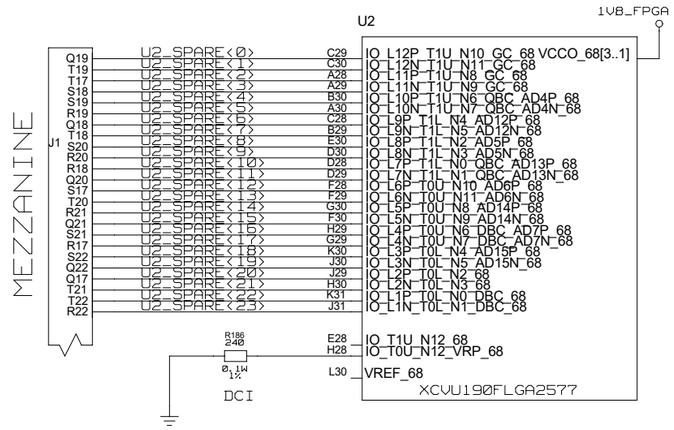

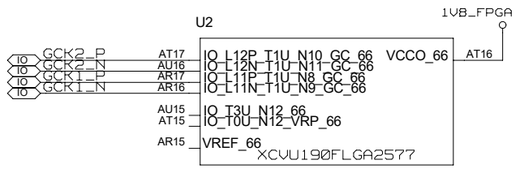

BANK
66
68

	NAME	DATE	SIGN
CHECKED	J. V.DE SOUZA		
CHECKED	U.SCHAEFER		
CHECKED	S.RAVE		
DRAWN	BAUSS	25.08.2015	

BLOCK TITLE
U2_PARALLEL_I/O

DRAWING TITLE
TOPO_L2

UNIVERSITY OF MAINZ

SIZE C | REV. | DRAWING NO.

SCALE | SHEET 3 OF 5

REVISIONS				
ZONE	LTR	DESCRIPTION	DATE	APPR.

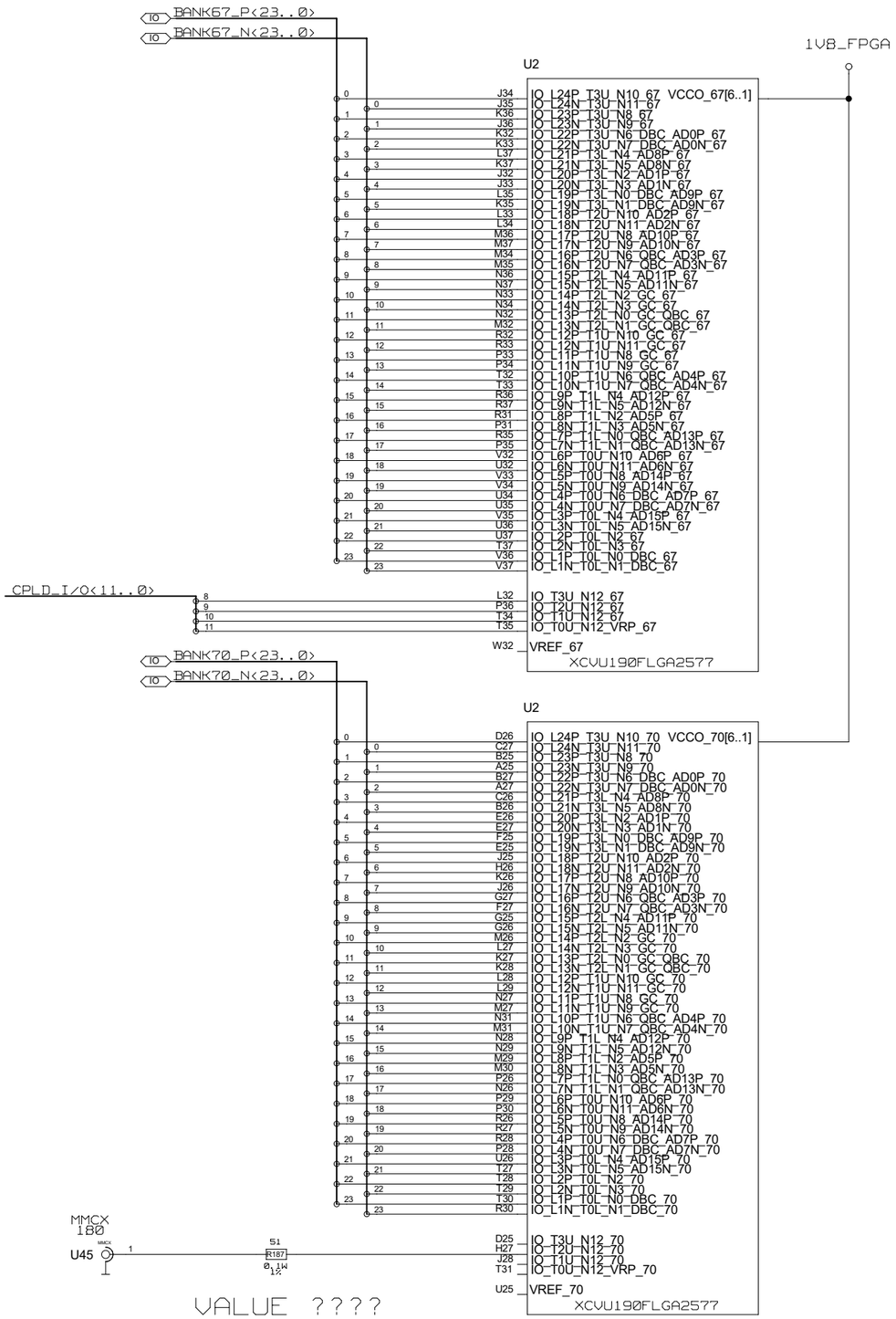

BANK
67
70

	NAME	DATE	SIGN
CHECKED	J. V.DE SOUZA		
CHECKED	U.SCHAEFER		
CHECKED	S.RAVE		
DRAWN	BAUSS	25.08.2015	

BLOCK TITLE
U2_PARALLEL_I/O

DRAWING TITLE
TOPO_L2

UNIVERSITY OF MAINZ

SIZE C | REV. | DRAWING NO.

SCALE | SHEET 4 OF 5

REVISIONS				
ZONE	LTR	DESCRIPTION	DATE	APPR.

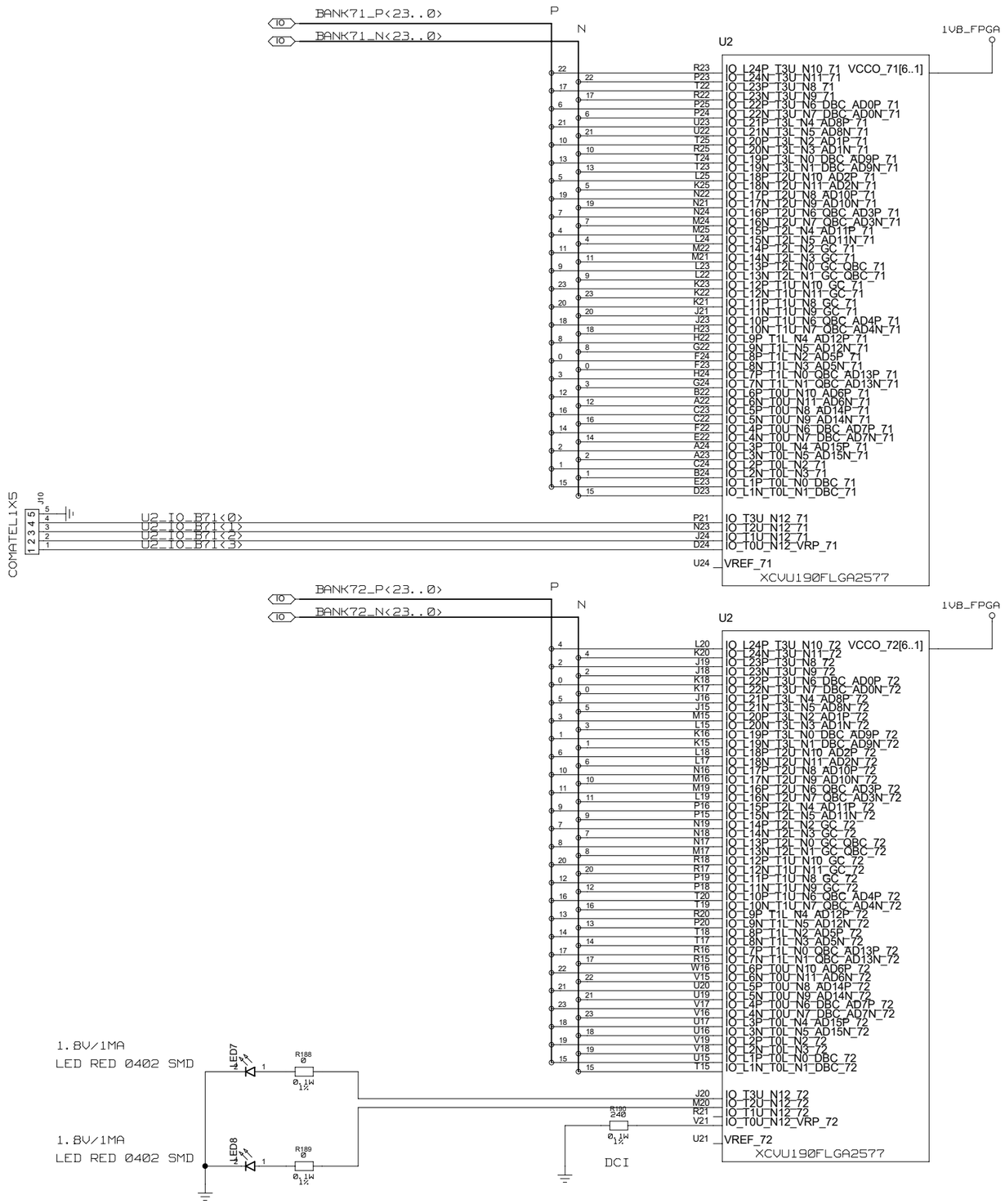

BANK
71
72

	NAME	DATE	SIGN
CHECKED	J. V.DE SOUZA		
CHECKED	U.SCHAEFER		
CHECKED	S.RAVE		
DRAWN	BAUSS	25.08.2015	

BLOCK TITLE
U2_PARALLEL_I/O

DRAWING TITLE
TOPO_L2

UNIVERSITY OF MAINZ

SIZE C | REV. | DRAWING NO.

SCALE | SHEET 5 OF 5

REVISIONS				
ZONE	LTR	DESCRIPTION	DATE	APPR.

HIGH SPPED OPTICAL LINKS

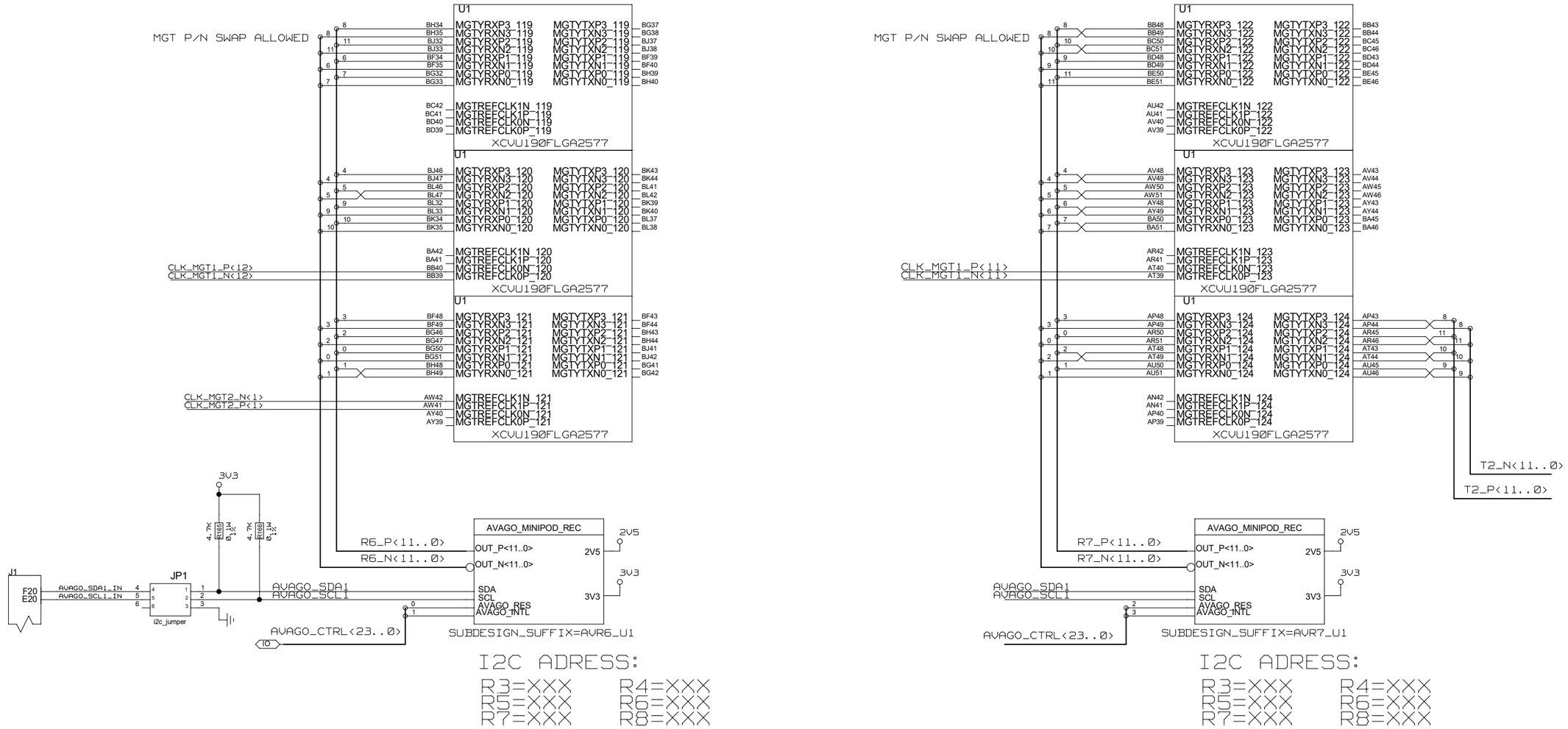

BANK
119
120
121
122
123
124

IN CLK_MGT1_P<12..1>
IN CLK_MGT1_N<12..1>
IN CLK_MGT2_P<6..1>
IN CLK_MGT2_N<6..1>

	NAME	DATE	SIGN
CHECKED	J. V.DE SOUZA		
CHECKED	U.SCHAEFER		
CHECKED	S.RAVE		
DRAWN	BAUSS	07.08.2015	

BLOCK TITLE: U1_MGT_REAL_TIME

DRAWING TITLE: TOPO_L2

UNIVERSITY OF MAINZ

SIZE: C | REV. | DRAWING NO.

SCALE | SHEET 1 OF 7

REVISIONS				
ZONE	LTR	DESCRIPTION	DATE	APPR.

HIGH SPPED OPTICAL LINKS

HIGH SPEED IPBUS

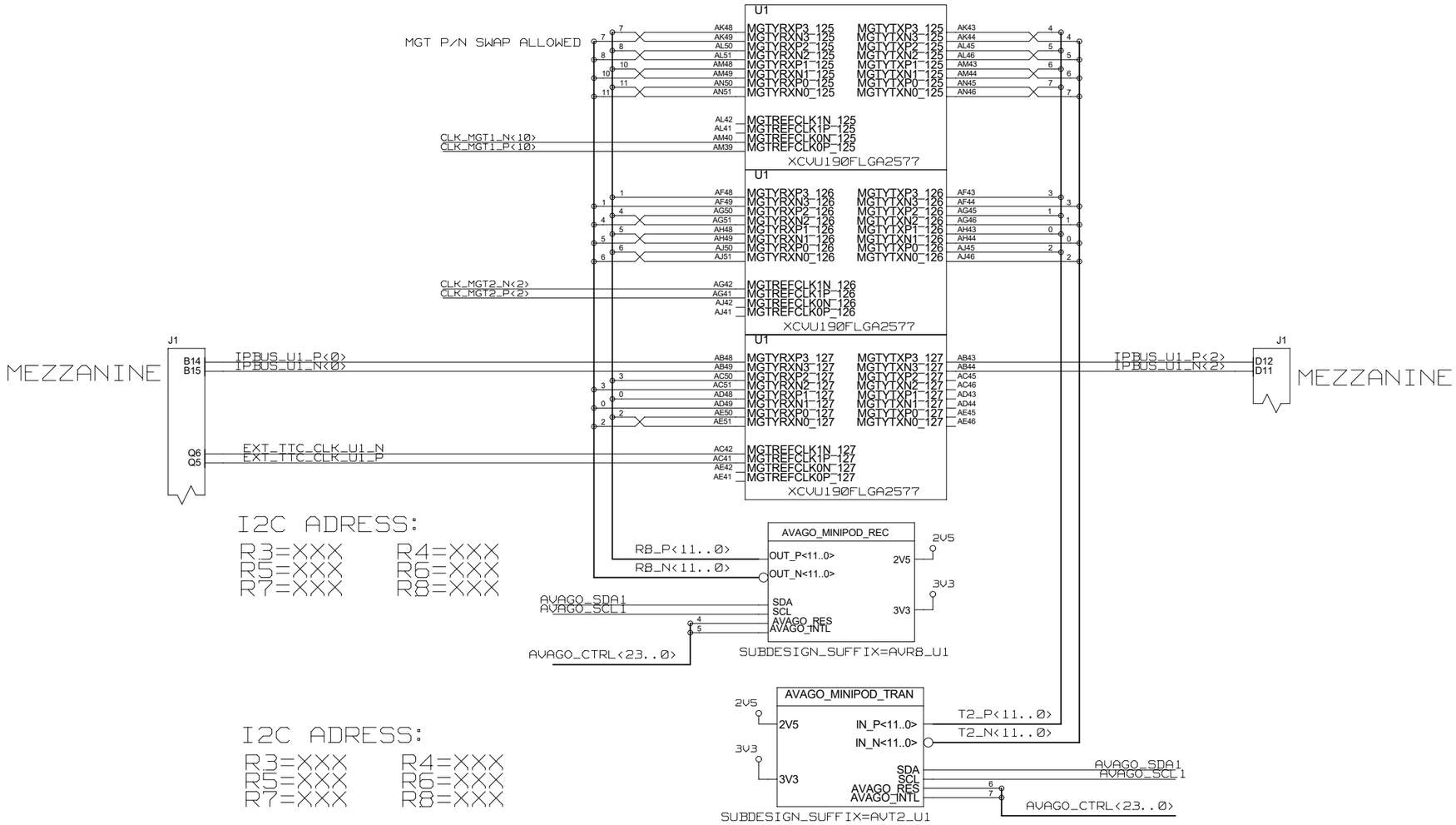

BANK
125
126
127

	NAME	DATE	SIGN
CHECKED	J. V.DE SOUZA		
CHECKED	U.SCHAEFER		
CHECKED	S.RAVE		
DRAWN	BAUSS	07.08.2015	

BLOCK TITLE
U1_MGT_REAL_TIME

DRAWING TITLE
TOPO_L2

UNIVERSITY OF MAINZ

SIZE C | REV. | DRAWING NO.

SCALE | SHEET 2 OF 7

REVISIONS				
ZONE	LTR	DESCRIPTION	DATE	APPR.

HIGH SPPED OPTICAL LINKS
HIGH SPEED IPBUS

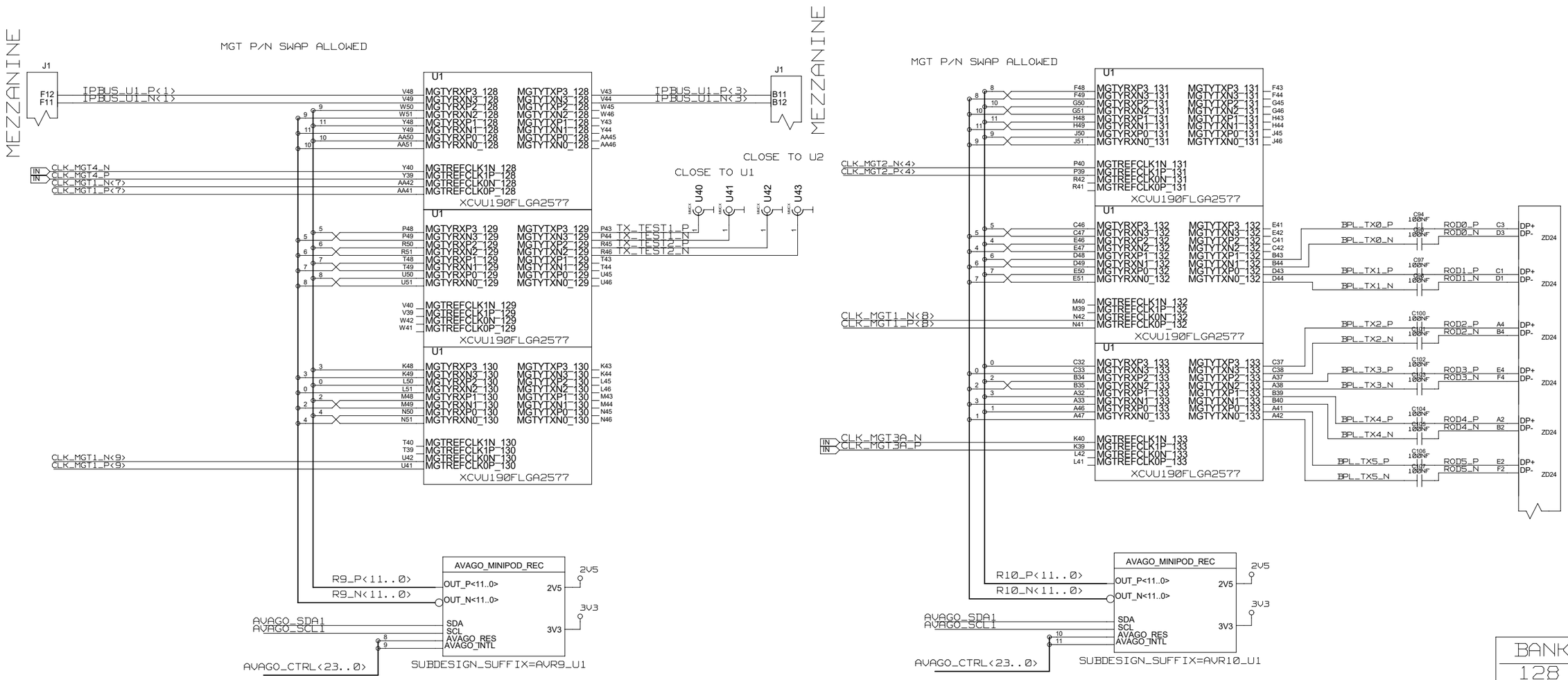

BANK
128
129
130
131
132
133

	NAME	DATE	SIGN
CHECKED	J. V.DE SOUZA		
CHECKED	U.SCHAEFER		
CHECKED	S.RAVE		
DRAWN	BAUSS	07.08.2015	

BLOCK TITLE: U1_MGT_REAL_TIME

DRAWING TITLE: TOPO_L2

UNIVERSITY OF MAINZ

SIZE: C | REV. | DRAWING NO.

SCALE | SHEET 3 OF 7

REVISIONS				
ZONE	LTR	DESCRIPTION	DATE	APPR.

HIGH SPPED OPTICAL LINKS

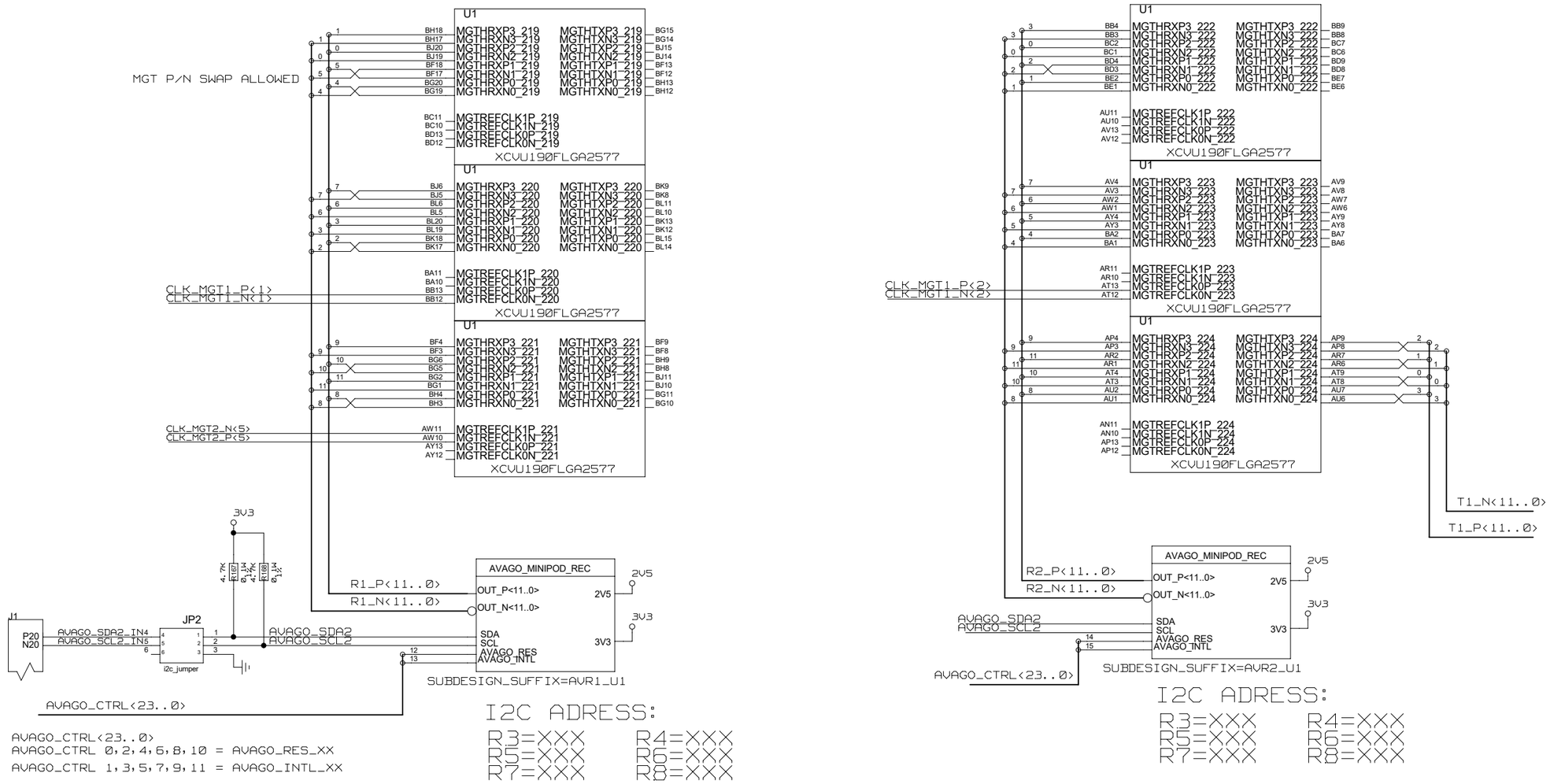

AVAGO_CTRL<23..0>
AVAGO_CTRL 0,2,4,6,8,10 = AVAGO_RES_XX
AVAGO_CTRL 1,3,5,7,9,11 = AVAGO_INTL_XX

I2C ADRESS:

R3=XXX R4=XXX
R5=XXX R6=XXX
R7=XXX R8=XXX

I2C ADRESS:

R3=XXX R4=XXX
R5=XXX R6=XXX
R7=XXX R8=XXX

BANK
219
220
221
222
223
224

	NAME	DATE	SIGN
CHECKED	J. V.DE SOUZA		
CHECKED	U.SCHAEFER		
CHECKED	S.RAVE		
DRAWN	BAUSS	07.08.2015	

BLOCK TITLE
U1_MGT_REAL_TIME

DRAWING TITLE
TOPO_L2

UNIVERSITY OF MAINZ

SIZE C | REV. | DRAWING NO.

SCALE | SHEET 4 OF 7

REVISIONS				
ZONE	LTR	DESCRIPTION	DATE	APPR.

HIGH SPPED OPTICAL LINKS

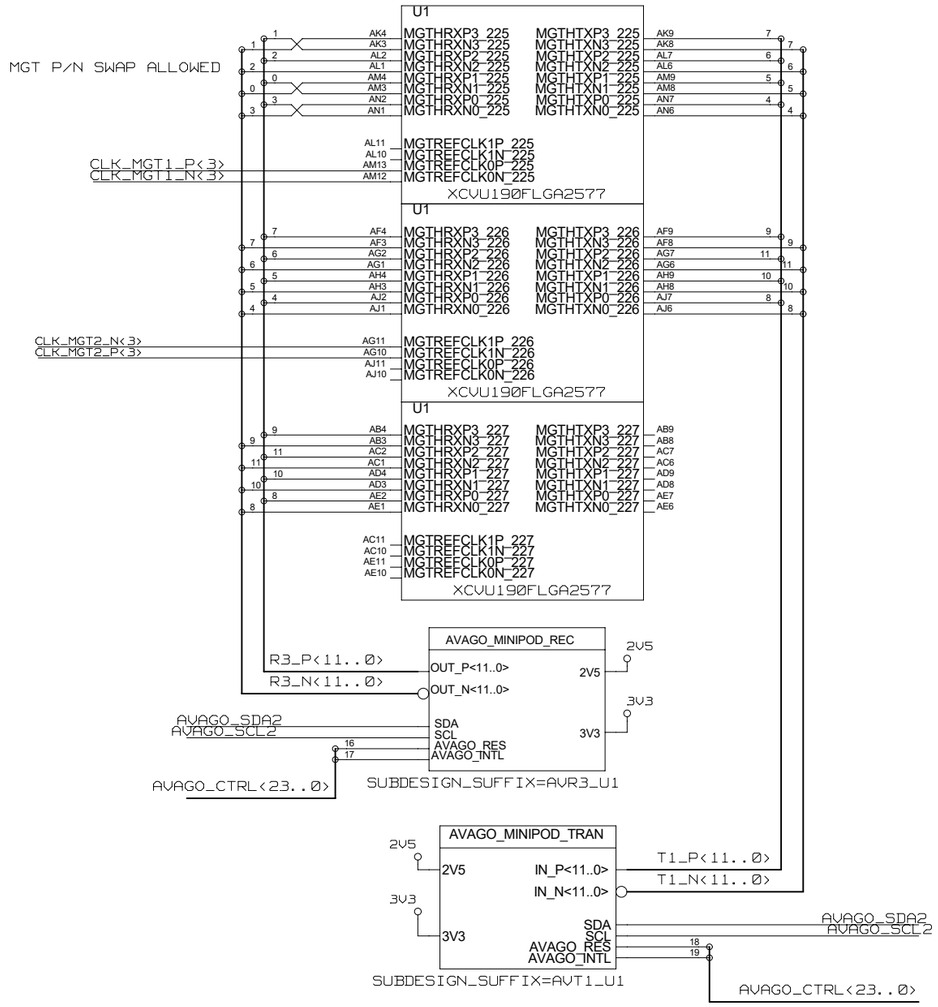

I2C ADRESS:

R3=XXX R4=XXX
R5=XXX R6=XXX
R7=XXX R8=XXX

BANK
225
226
227

	NAME	DATE	SIGN
CHECKED	J. V.DE SOUZA		
CHECKED	U.SCHAEFER		
CHECKED	S.RAVE		
DRAWN	BAUSS	07.08.2015	

BLOCK TITLE: U1_MGT_REAL_TIME

DRAWING TITLE: TOPO_L2

UNIVERSITY OF MAINZ

SIZE: C | REV. | DRAWING NO.

SCALE | SHEET 5 OF 7

REVISIONS				
ZONE	LTR	DESCRIPTION	DATE	APPR.

HIGH SPPED OPTICAL LINKS

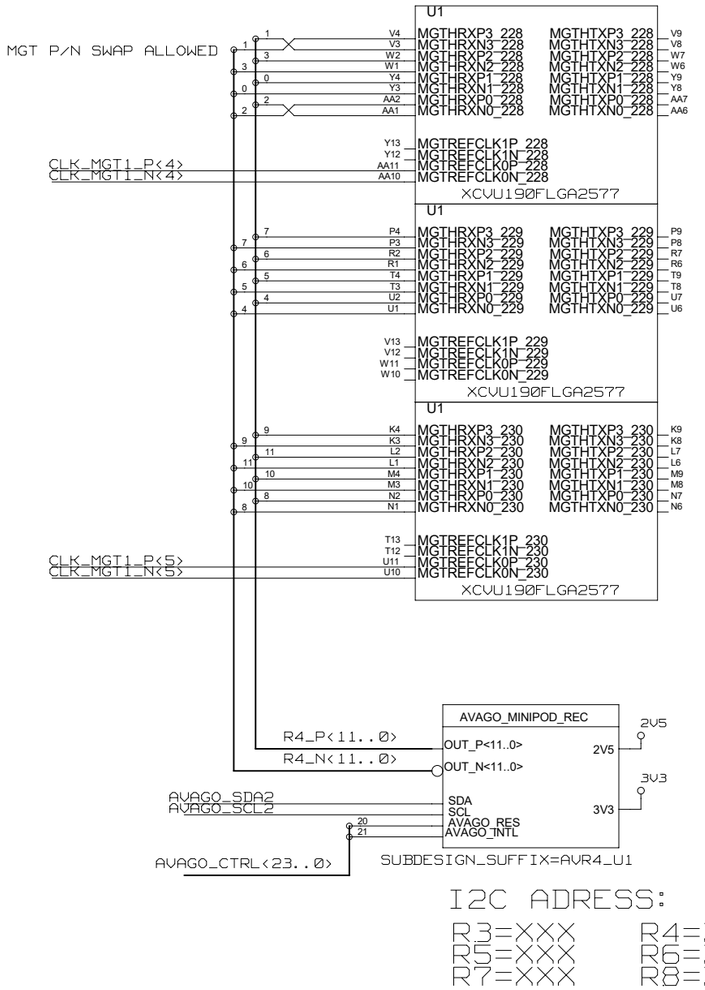

I2C ADRESS:

R3=XXX R4=XXX
R5=XXX R6=XXX
R7=XXX R8=XXX

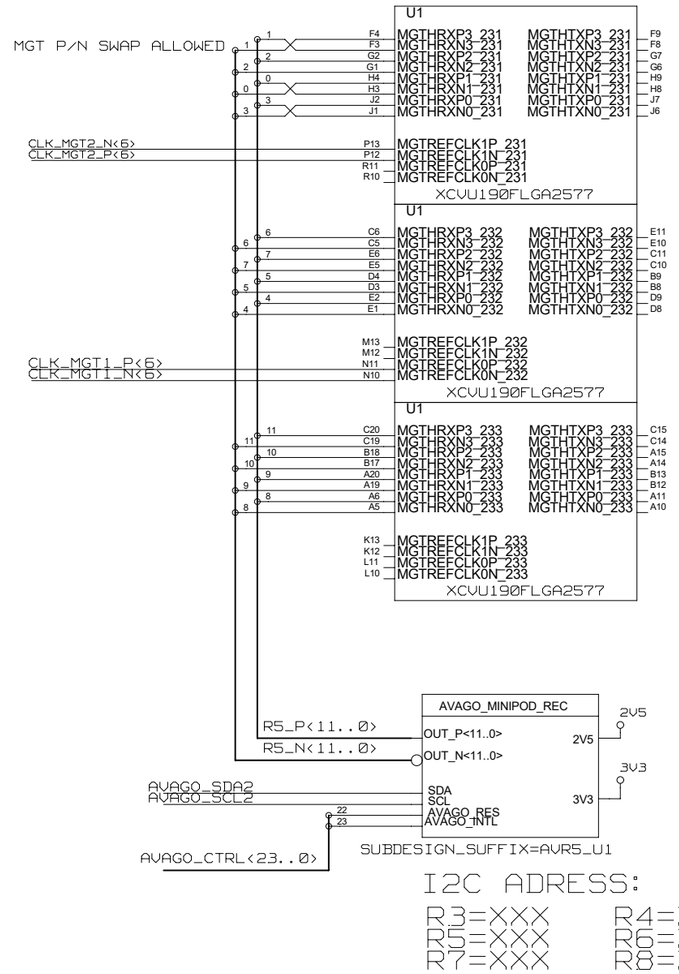

I2C ADRESS:

R3=XXX R4=XXX
R5=XXX R6=XXX
R7=XXX R8=XXX

BANK
228
229
230
231
232
233

	NAME	DATE	SIGN
CHECKED	J. V.DE SOUZA		
CHECKED	U.SCHAEFER		
CHECKED	S.RAVE		
DRAWN	BAUSS	07.08.2015	

BLOCK TITLE: U1_MGT_REAL_TIME

DRAWING TITLE: TOPO_L2

UNIVERSITY OF MAINZ

SIZE: C | REV. | DRAWING NO.

SCALE | SHEET 6 OF 7

REVISIONS				
ZONE	LTR	DESCRIPTION	DATE	APPR.

AVAGO RECEIVER

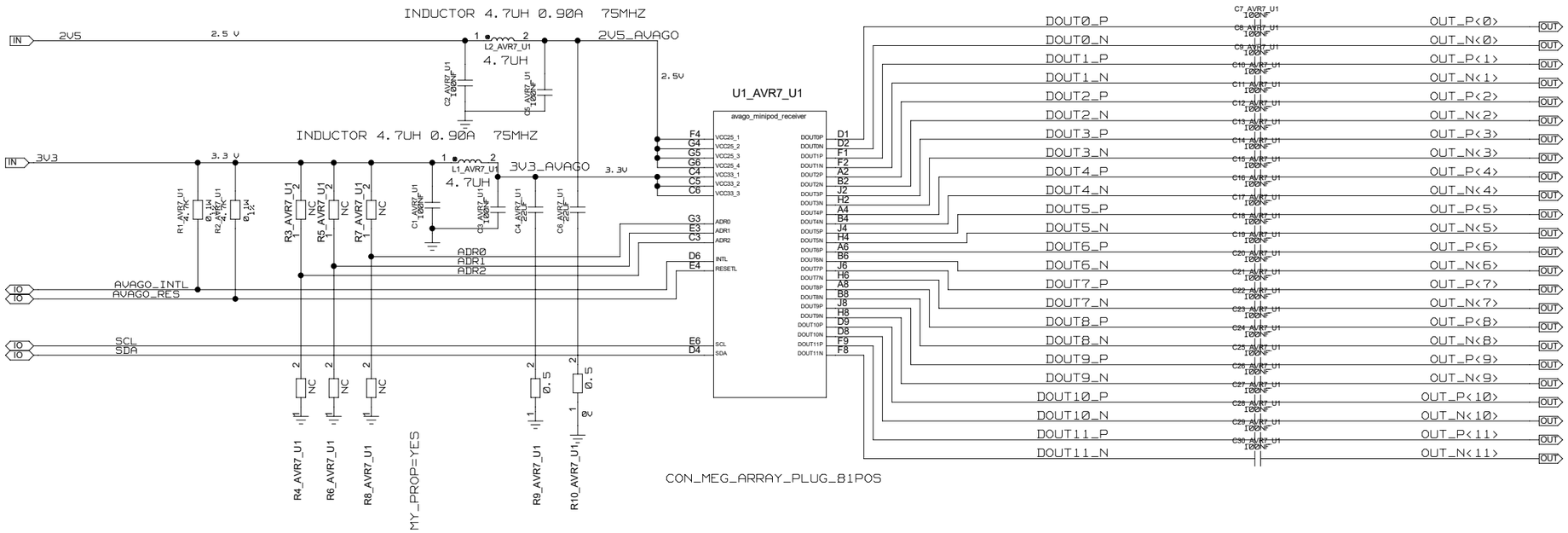

UNIVERSITY OF MAINZ	DRAWING TITLE TOPO_L2		
	SIZE C	REV.	DRAWING NO.
	SCALE		SHEET OF

REVISIONS				
ZONE	LTR	DESCRIPTION	DATE	APPR.

AVAGO TRANSMITTER

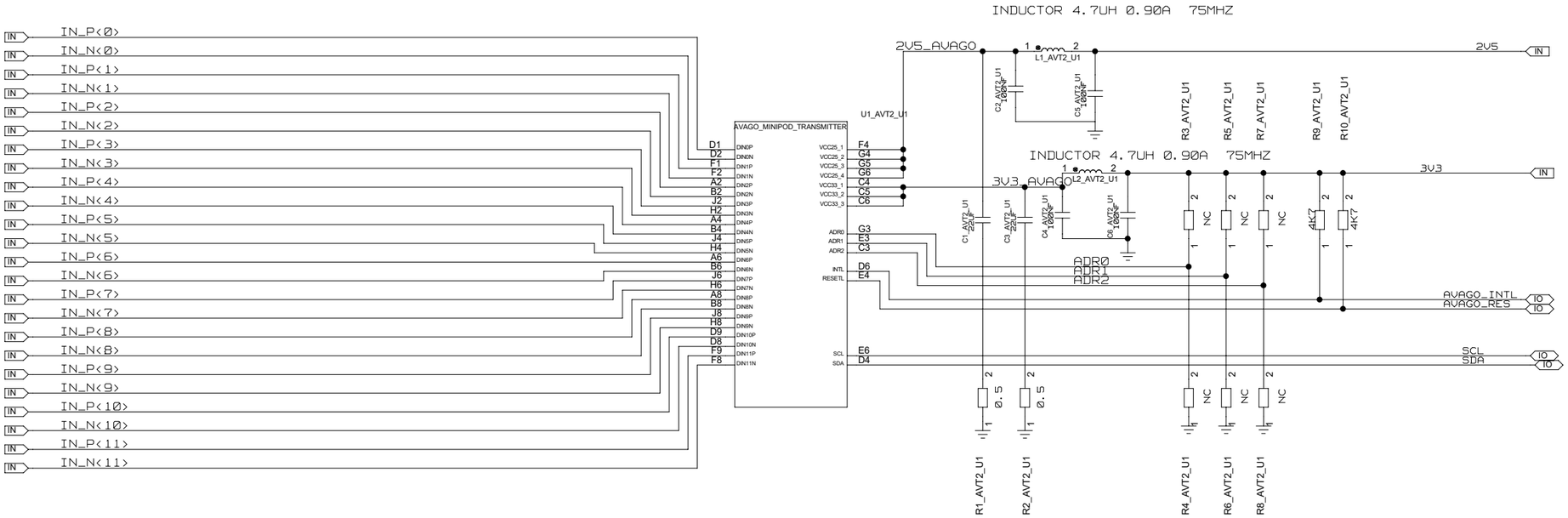

UNIVERSITY OF MAINZ	DRAWING TITLE: TOPO_L2		
	SIZE: C	REV.	DRAWING NO.
	SCALE		SHEET OF

ATCA POWER IN & CTRL

REVISIONS				
ZONE	LTR	DESCRIPTION	DATE	APPR.

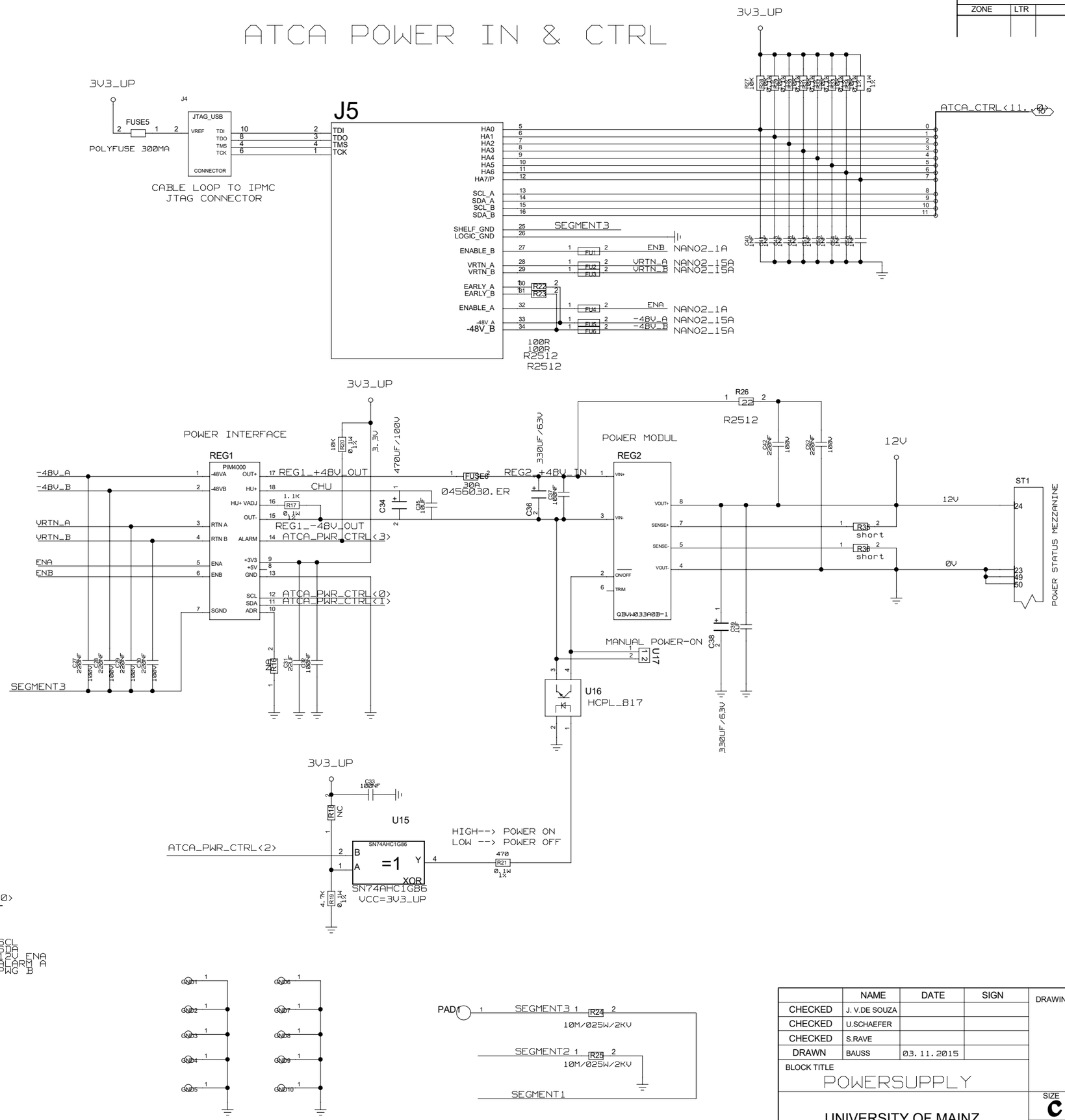

	NAME	DATE	SIGN
CHECKED	J. V.DE SOUZA		
CHECKED	U.SCHAEFER		
CHECKED	S.RAVE		
DRAWN	BAUSS	03.11.2015	

BLOCK TITLE: POWERSUPPLY

DRAWING TITLE: TOPO_L2

UNIVERSITY OF MAINZ

SIZE: C | REV. | DRAWING NO.

SCALE | SHEET OF

REVISIONS				
ZONE	LTR	DESCRIPTION	DATE	APPR.

PMBUS CONNECTORS

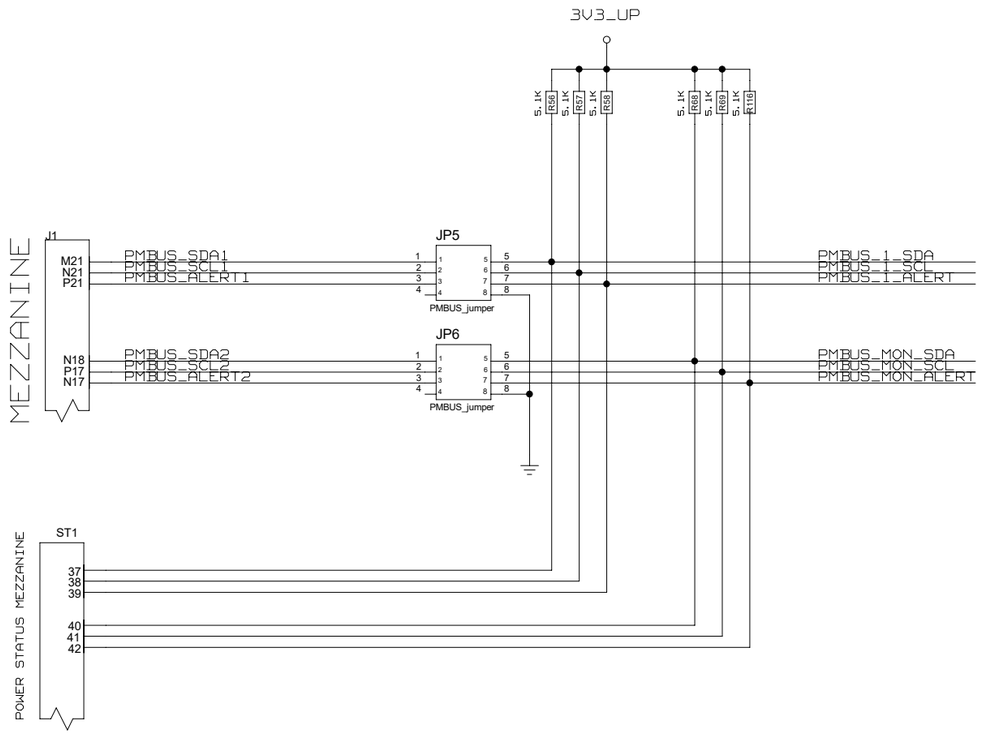

	NAME	DATE	SIGN
CHECKED	J. V.DE SOUZA		
CHECKED	U.SCHAEFER		
CHECKED	S.RAVE		
DRAWN	BAUSS		

BLOCK TITLE
POWERSUPPLY

UNIVERSITY OF MAINZ

DRAWING TITLE
TOPO_L2

SIZE C | REV. | DRAWING NO.

SCALE | SHEET OF

REVISIONS				
ZONE	LTR	DESCRIPTION	DATE	APPR.

POWERSEQUENCING

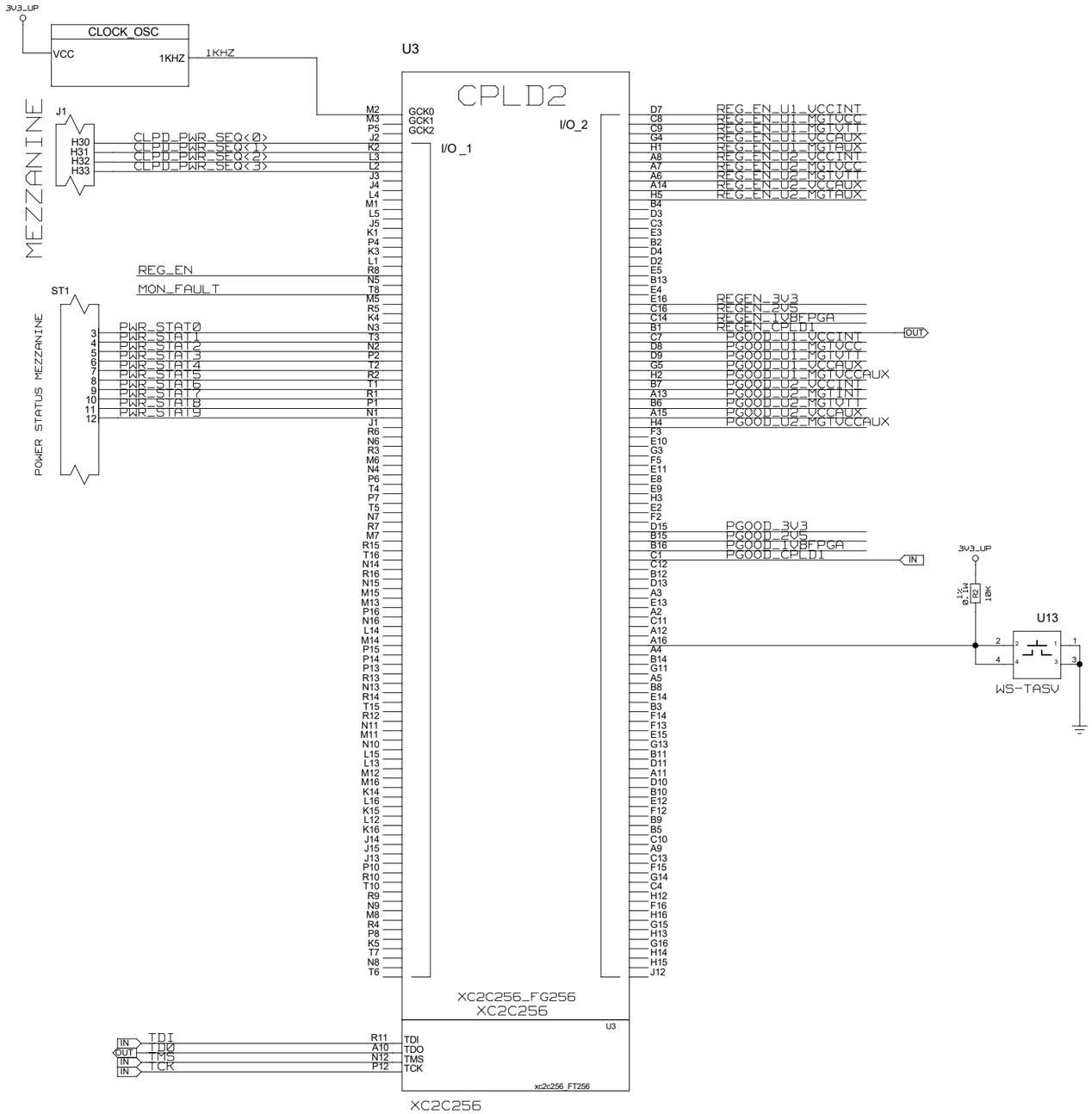

VOLTAGE MONITORING

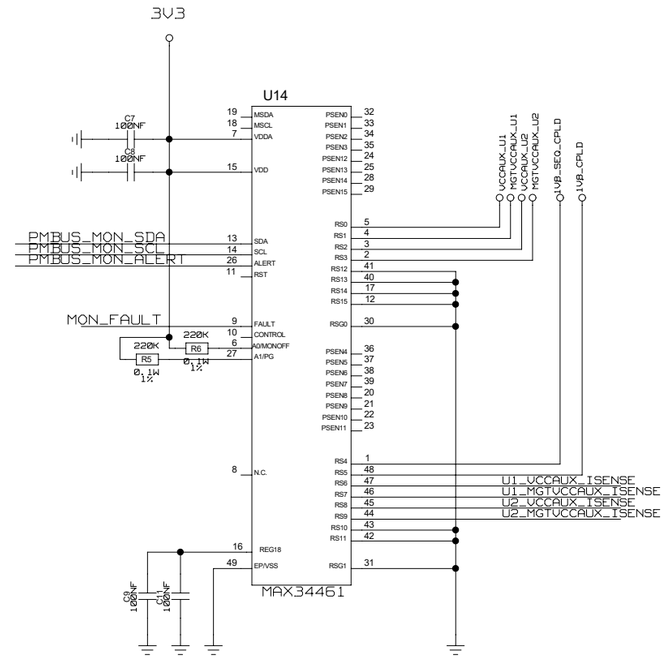

12V SUPERVISORY

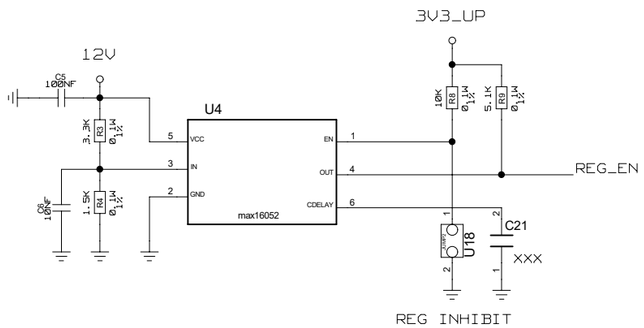

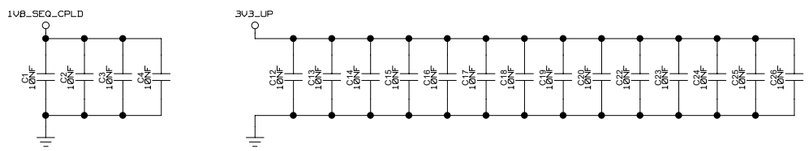

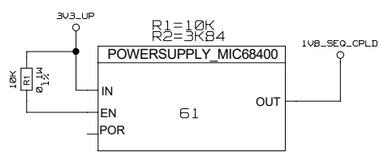

	NAME	DATE	SIGN
CHECKED	J. V.DE SOUZA		
CHECKED	U.SCHAEFER		
CHECKED	S.RAVE		
DRAWN	BAUSS		

BLOCK TITLE
POWERSUPPLY

DRAWING TITLE
TOPO_L2

UNIVERSITY OF MAINZ

SIZE C | REV. | DRAWING NO.

SCALE | SHEET OF

REVISIONS				
ZONE	LTR	DESCRIPTION	DATE	APPR.

BOARDLEVEL 1V8, 2V5, 3V3

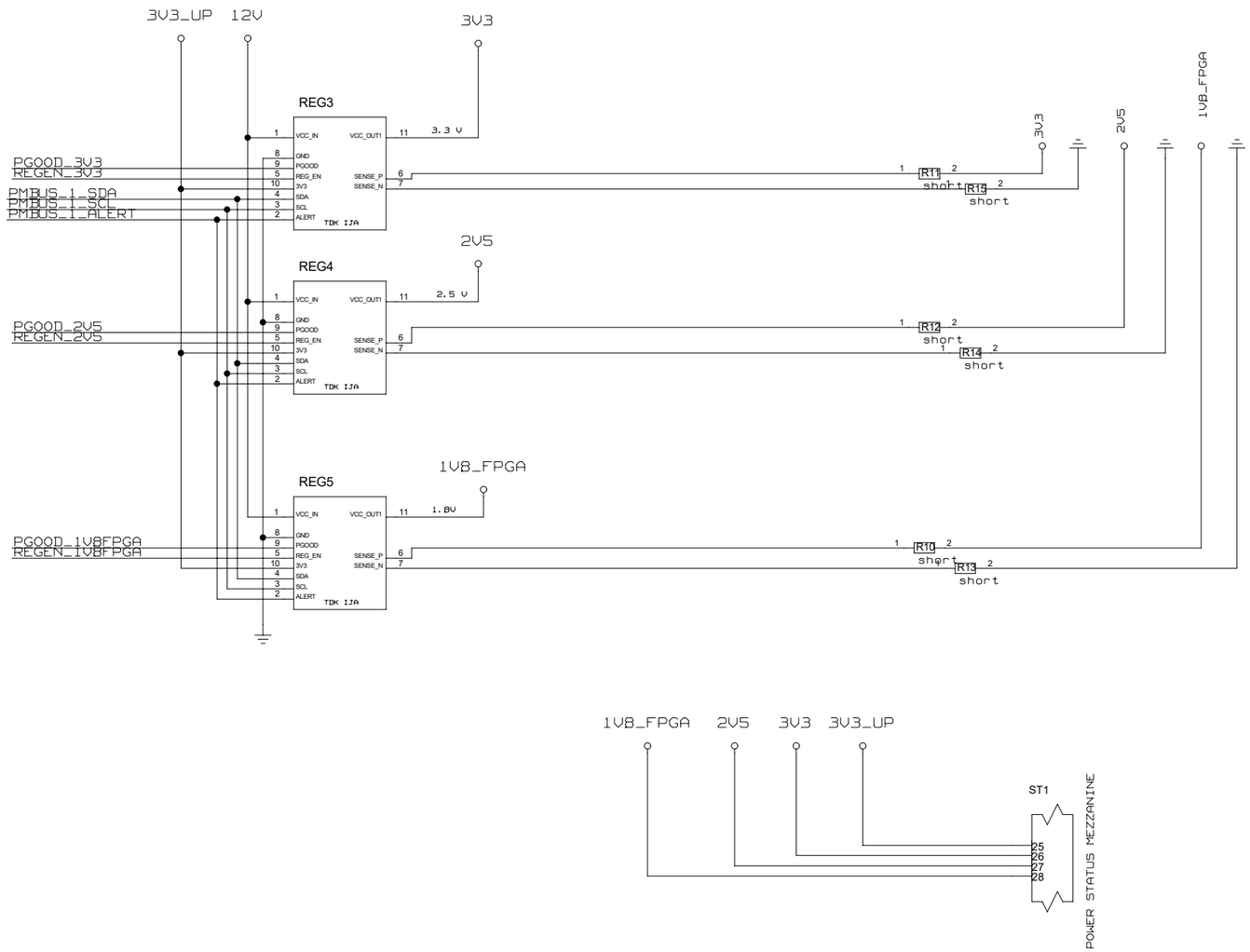

	NAME	DATE	SIGN
CHECKED	J. V.DE SOUZA		
CHECKED	U.SCHAEFER		
CHECKED	S.RAVE		
DRAWN	BAUSS		

BLOCK TITLE
POWERSUPPLY

UNIVERSITY OF MAINZ

DRAWING TITLE
TOPO_L2

SIZE C | REV. | DRAWING NO.

SCALE | SHEET OF

REVISIONS				
ZONE	LTR	DESCRIPTION	DATE	APPR.

POWERSUPPLIES U1

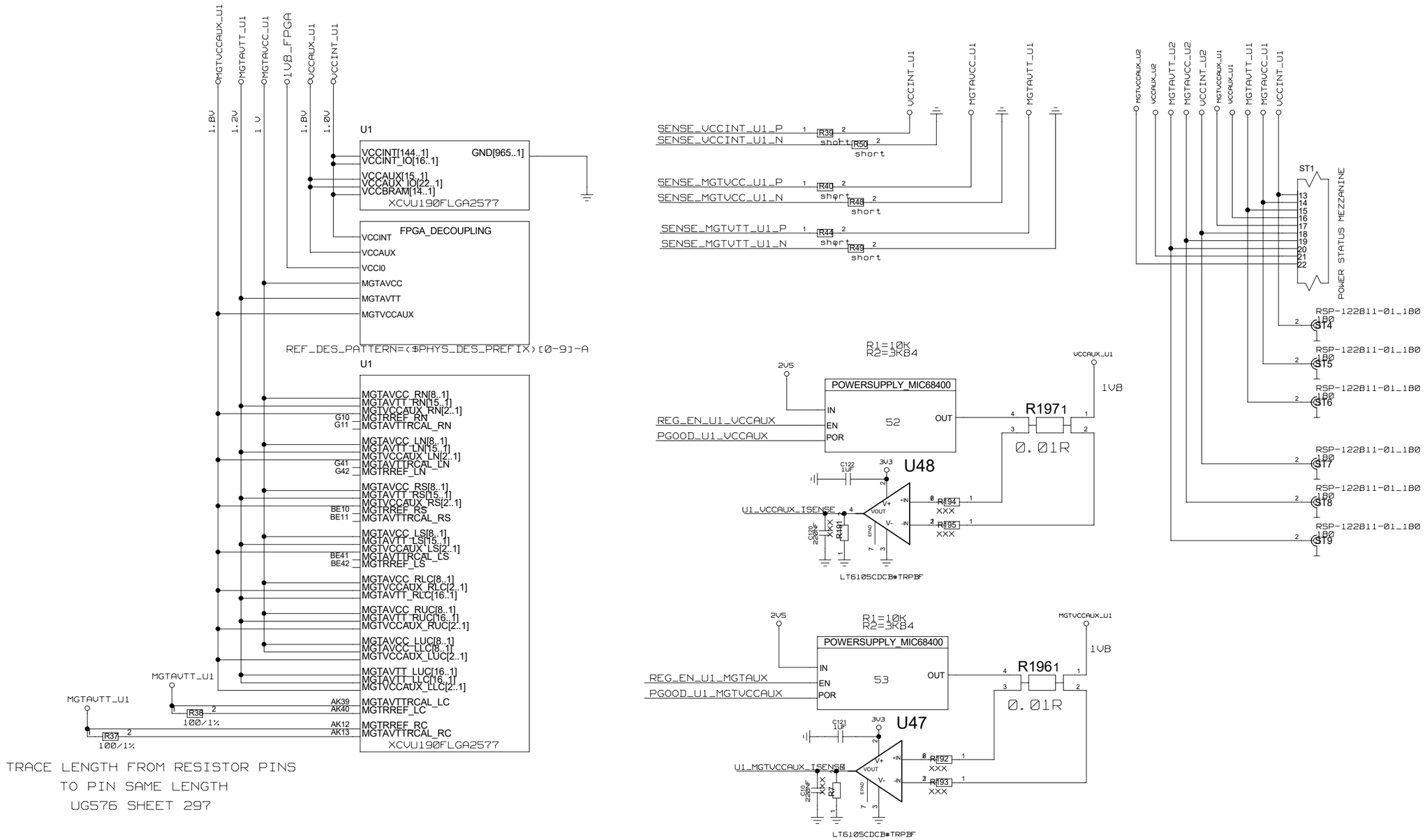

TRACE LENGTH FROM RESISTOR PINS
TO PIN SAME LENGTH
UG576 SHEET 297

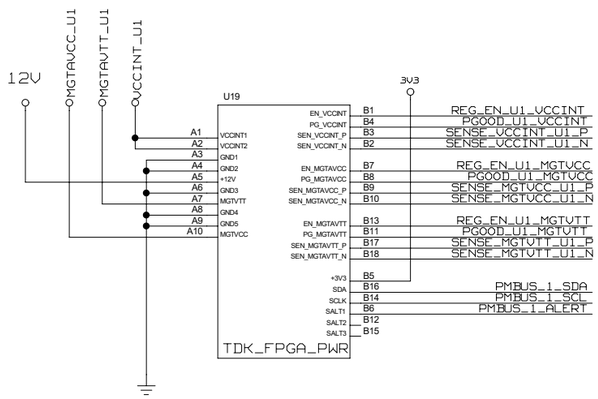

	NAME	DATE	SIGN
CHECKED	J. V.DE SOUZA		
CHECKED	U.SCHAEFER		
CHECKED	S.RAVE		
DRAWN	BAUSS		

BLOCK TITLE: POWERSUPPLY

DRAWING TITLE: TOPO_L2

UNIVERSITY OF MAINZ

SIZE: C | REV. | DRAWING NO.

SCALE | SHEET OF

REVISIONS				
ZONE	LTR	DESCRIPTION	DATE	APPR.

POWERSUPPLIES U2

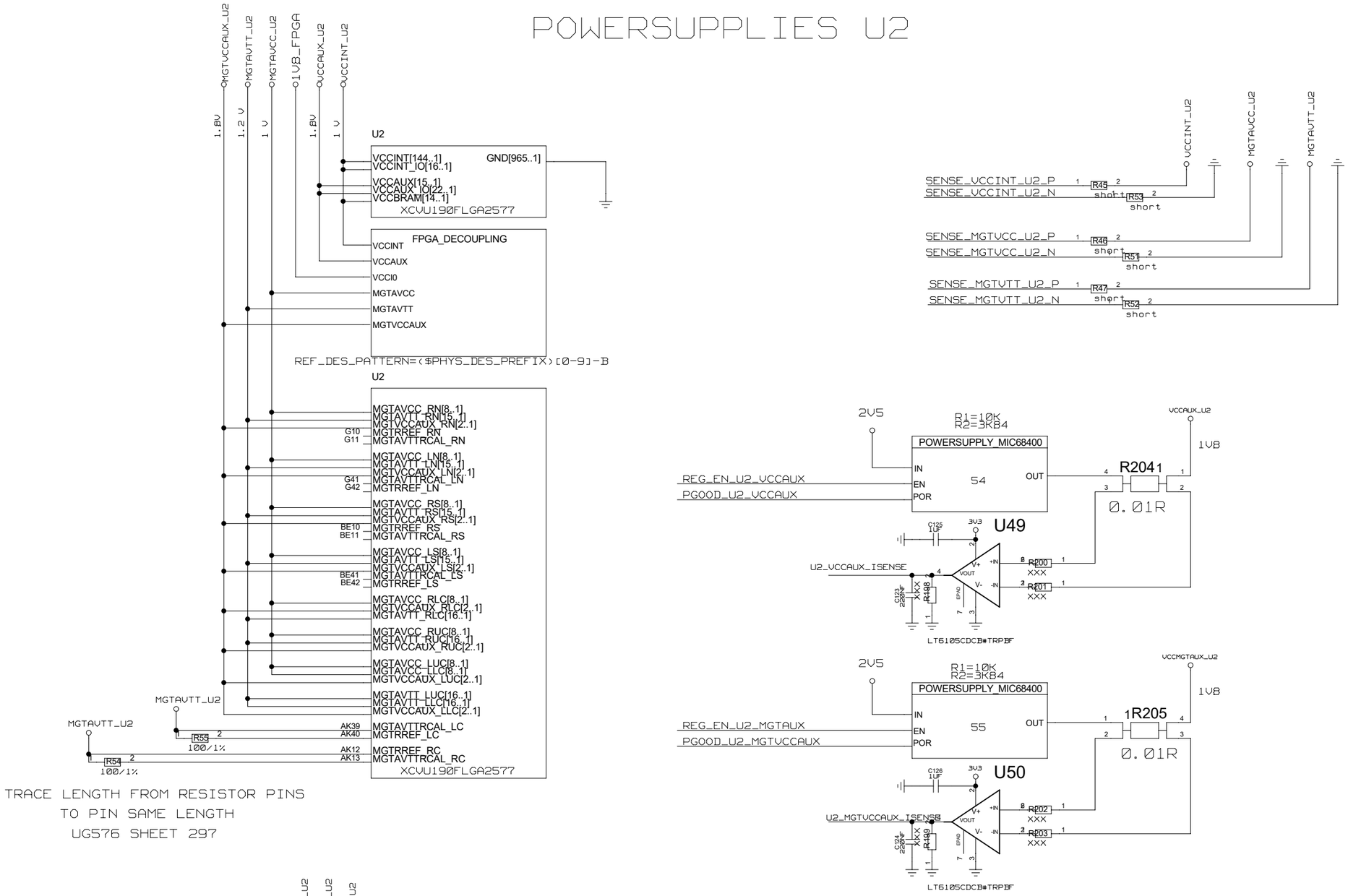

	NAME	DATE	SIGN
CHECKED	J. V.DE SOUZA		
CHECKED	U.SCHAEFER		
CHECKED	S.RAVE		
DRAWN	BAUSS		

BLOCK TITLE: POWERSUPPLY

DRAWING TITLE: TOPO_L2

UNIVERSITY OF MAINZ

SIZE: C | REV. | DRAWING NO.

SCALE | SHEET OF

REVISIONS				
ZONE	LTR	DESCRIPTION	DATE	APPR.

VCCINT VCCAUX VCCIO DECOUPLING

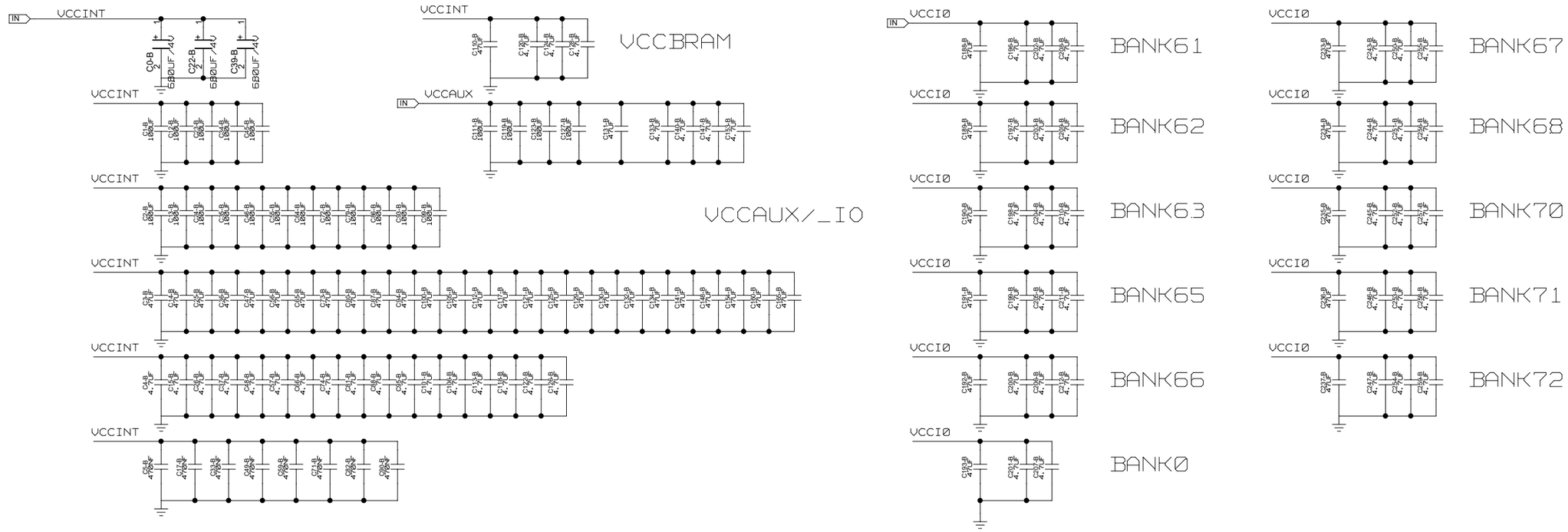

MGT DECOUPLING

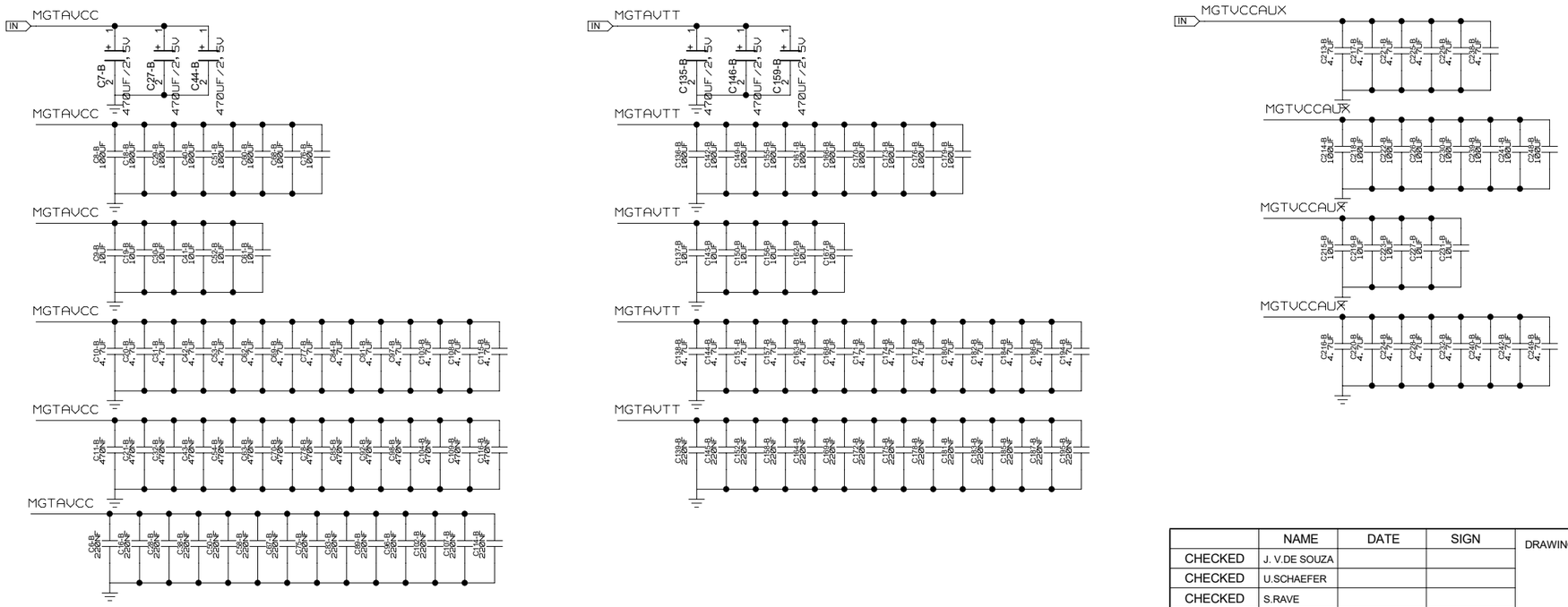

	NAME	DATE	SIGN
CHECKED	J. V.DE SOUZA		
CHECKED	U.SCHAEFER		
CHECKED	S.RAVE		
DRAWN	BAUSS		

BLOCK TITLE: FPGA_DECOUPLING

DRAWING TITLE: TOPO_L2

UNIVERSITY OF MAINZ

SIZE: C | REV. | DRAWING NO.

SCALE | SHEET OF

REVISIONS				
ZONE	LTR	DESCRIPTION	DATE	APPR.

POWERSUPPLY_MIC68400

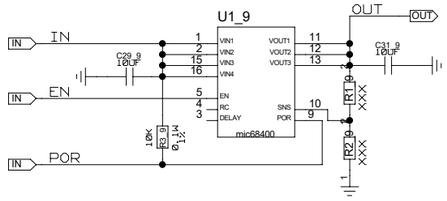

	NAME	DATE	SIGN
CHECKED	J. V.DE SOUZA		
CHECKED	U.SCHAEFER		
CHECKED	S.RAVE		
DRAWN	BAUSS		

BLOCK TITLE
POWERSUPPLY_MIC68400

DRAWING TITLE
TOPO_L2

UNIVERSITY OF MAINZ

SIZE C | REV. | DRAWING NO.

SCALE | SHEET OF

REVISIONS				
ZONE	LTR	DESCRIPTION	DATE	APPR.

CLOCK_OSC

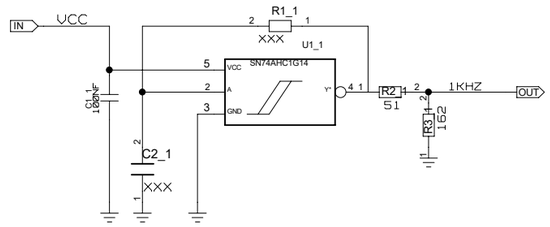

	NAME	DATE	SIGN
CHECKED	J. V.DE SOUZA		
CHECKED	U.SCHAEFER		
CHECKED	S.RAVE		
DRAWN	BAUSS		
BLOCK TITLE			

DRAWING TITLE

TOPO_L2

UNIVERSITY OF MAINZ

SIZE C | REV. | DRAWING NO.

SCALE | SHEET OF

REVISIONS				
ZONE	LTR	DESCRIPTION	DATE	APPR.

HIGH SPPED OPTICAL LINKS

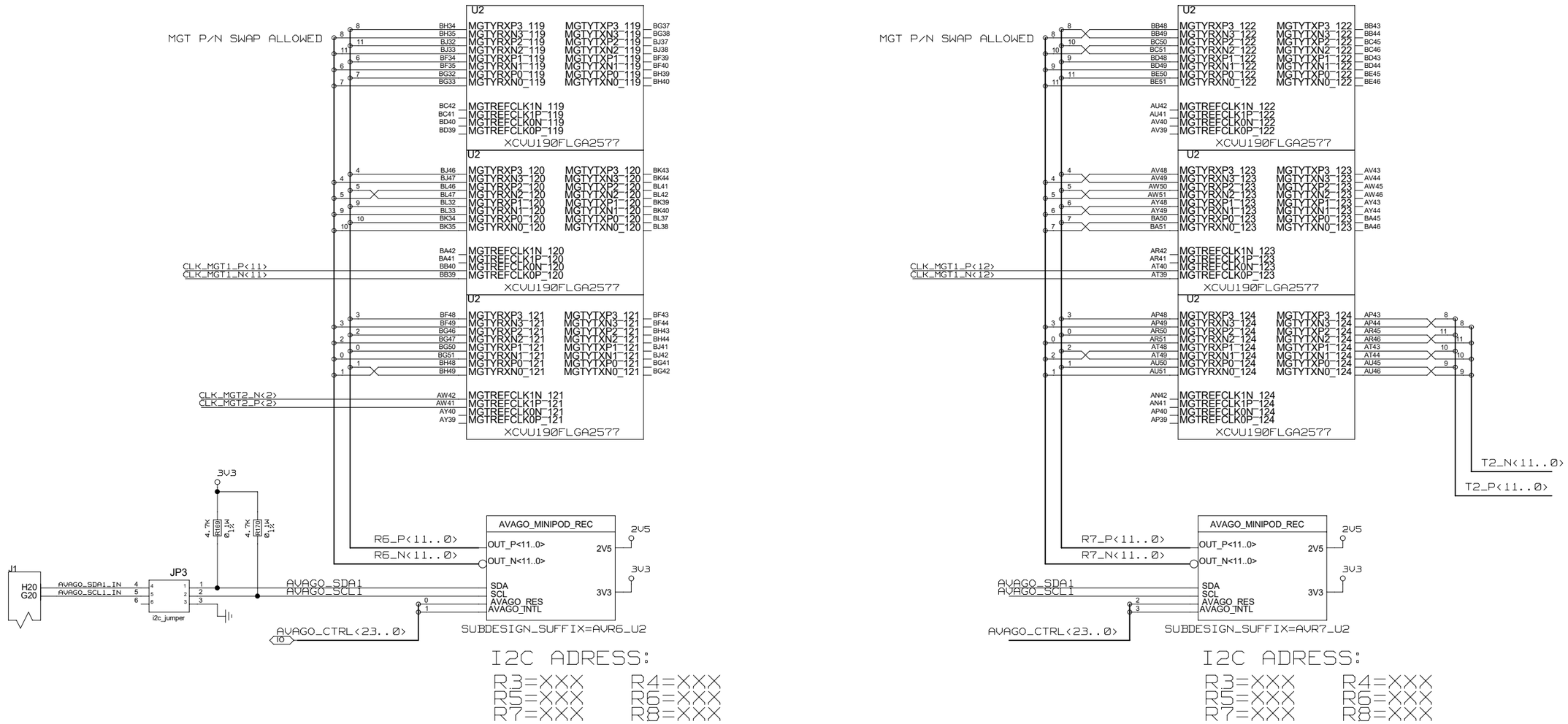

BANK
119
120
121
122
123
124

IN CLK_MGT1_P<12..1>
IN CLK_MGT1_N<12..1>
IN CLK_MGT2_P<6..1>
IN CLK_MGT2_N<6..1>

	NAME	DATE	SIGN
CHECKED	J. V.DE SOUZA		
CHECKED	U.SCHAEFER		
CHECKED	S.RAVE		
DRAWN	BAUSS	07.08.2015	

BLOCK TITLE
U2_MGT_REAL_TIME

DRAWING TITLE
TOPO_L2

UNIVERSITY OF MAINZ

SIZE C | REV. | DRAWING NO.

SCALE | SHEET 5 OF 7

REVISIONS				
ZONE	LTR	DESCRIPTION	DATE	APPR.

HIGH SPPED OPTICAL LINKS

HIGH SPEED IPBUS

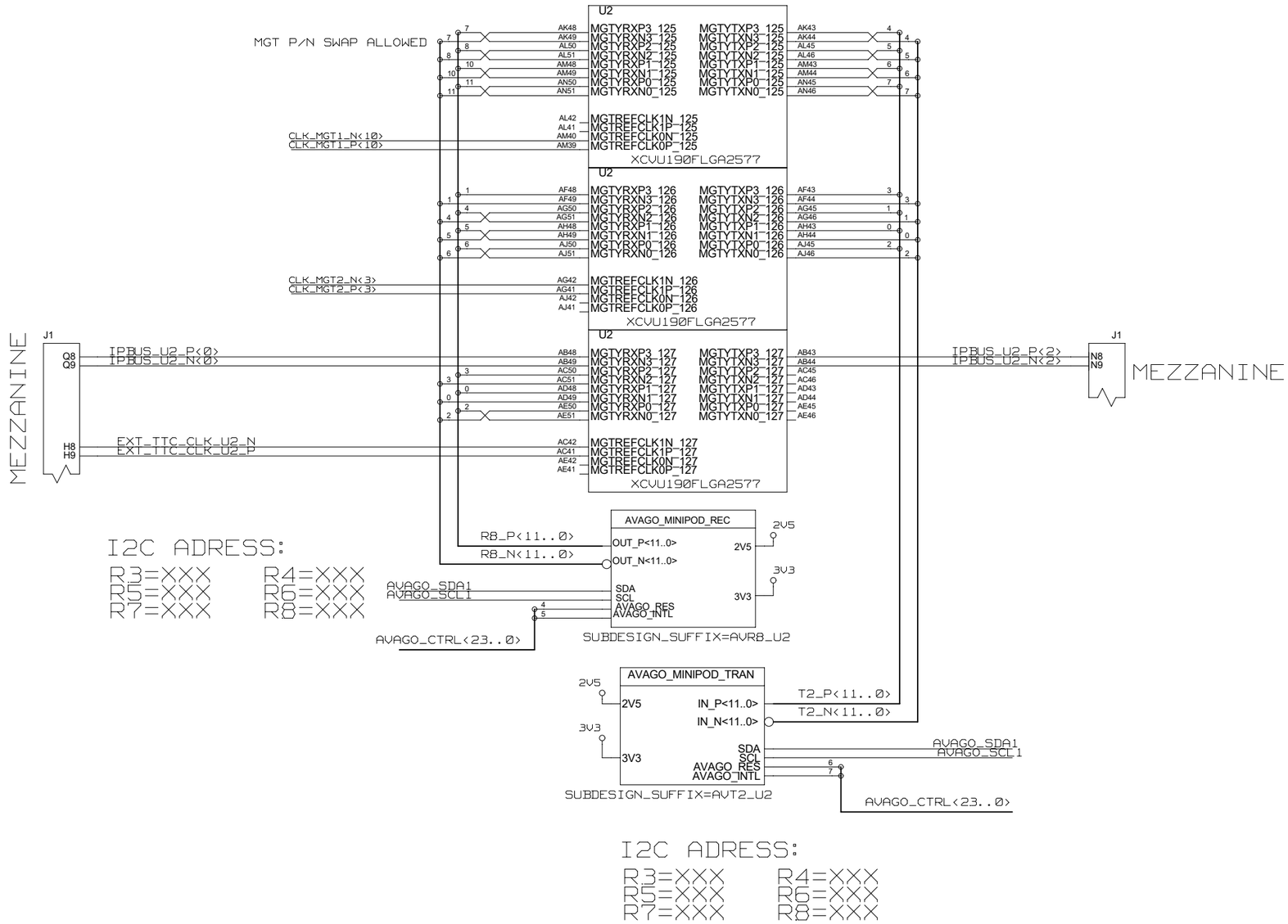

I2C ADRESS:

R3=XXX R4=XXX
R5=XXX R6=XXX
R7=XXX R8=XXX

I2C ADRESS:

R3=XXX R4=XXX
R5=XXX R6=XXX
R7=XXX R8=XXX

BANK
125
126
127

	NAME	DATE	SIGN
CHECKED	J. V.DE SOUZA		
CHECKED	U.SCHAEFER		
CHECKED	S.RAVE		
DRAWN	BAUSS	07.08.2015	

BLOCK TITLE: U2_MGT_REAL_TIME

DRAWING TITLE: TOPO_L2

UNIVERSITY OF MAINZ

SIZE: C | REV. | DRAWING NO.

SCALE | SHEET 6 OF 7

REVISIONS				
ZONE	LTR	DESCRIPTION	DATE	APPR.

HIGH SPPED OPTICAL LINKS

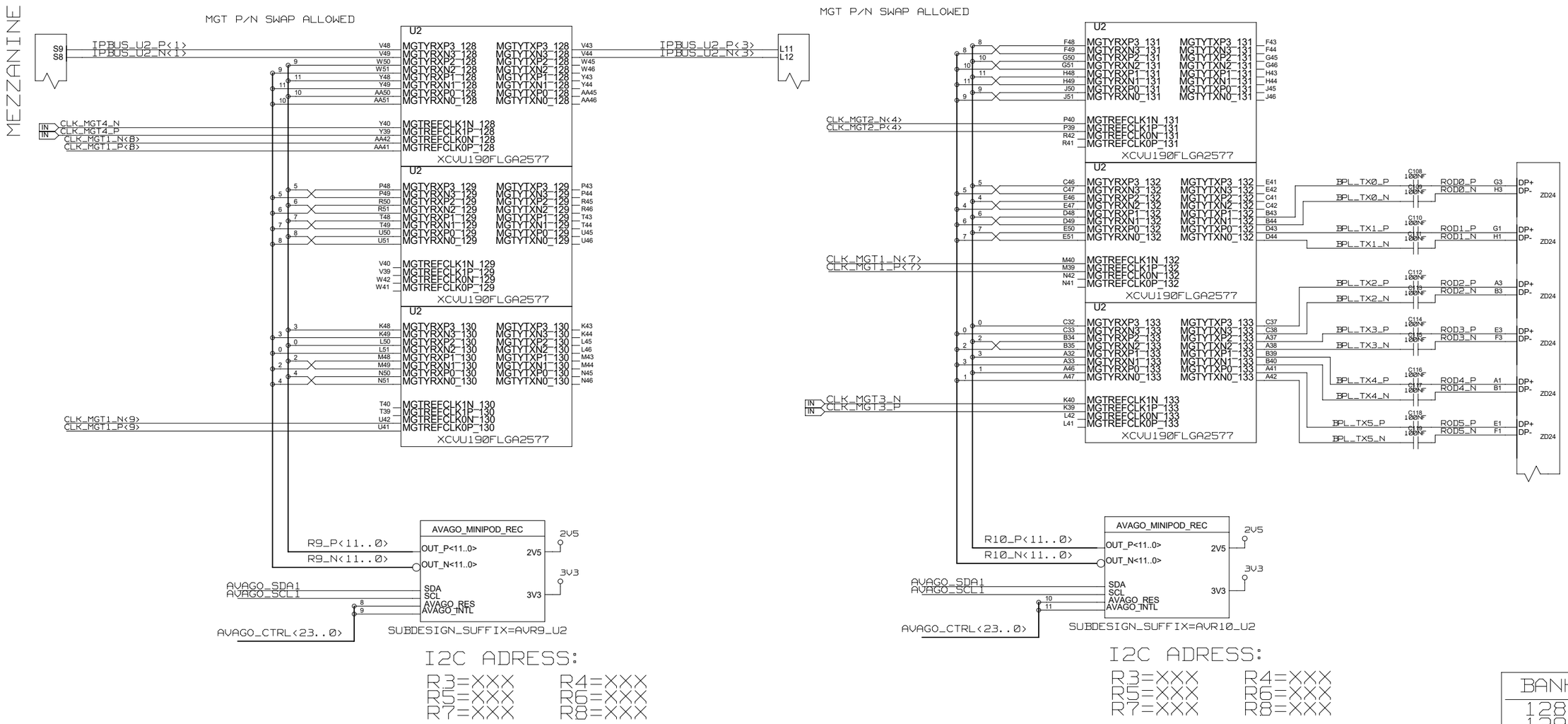

BANK
128
129
130
131
132
133

	NAME	DATE	SIGN
CHECKED	J. V.DE SOUZA		
CHECKED	U.SCHAEFER		
CHECKED	S.RAVE		
DRAWN	BAUSS	07.08.2015	

BLOCK TITLE: U2_MGT_REAL_TIME

DRAWING TITLE: TOPO_L2

UNIVERSITY OF MAINZ

SIZE: C | REV. | DRAWING NO.

SCALE | SHEET 7 OF 7

REVISIONS				
ZONE	LTR	DESCRIPTION	DATE	APPR.

HIGH SPPED OPTICAL LINKS

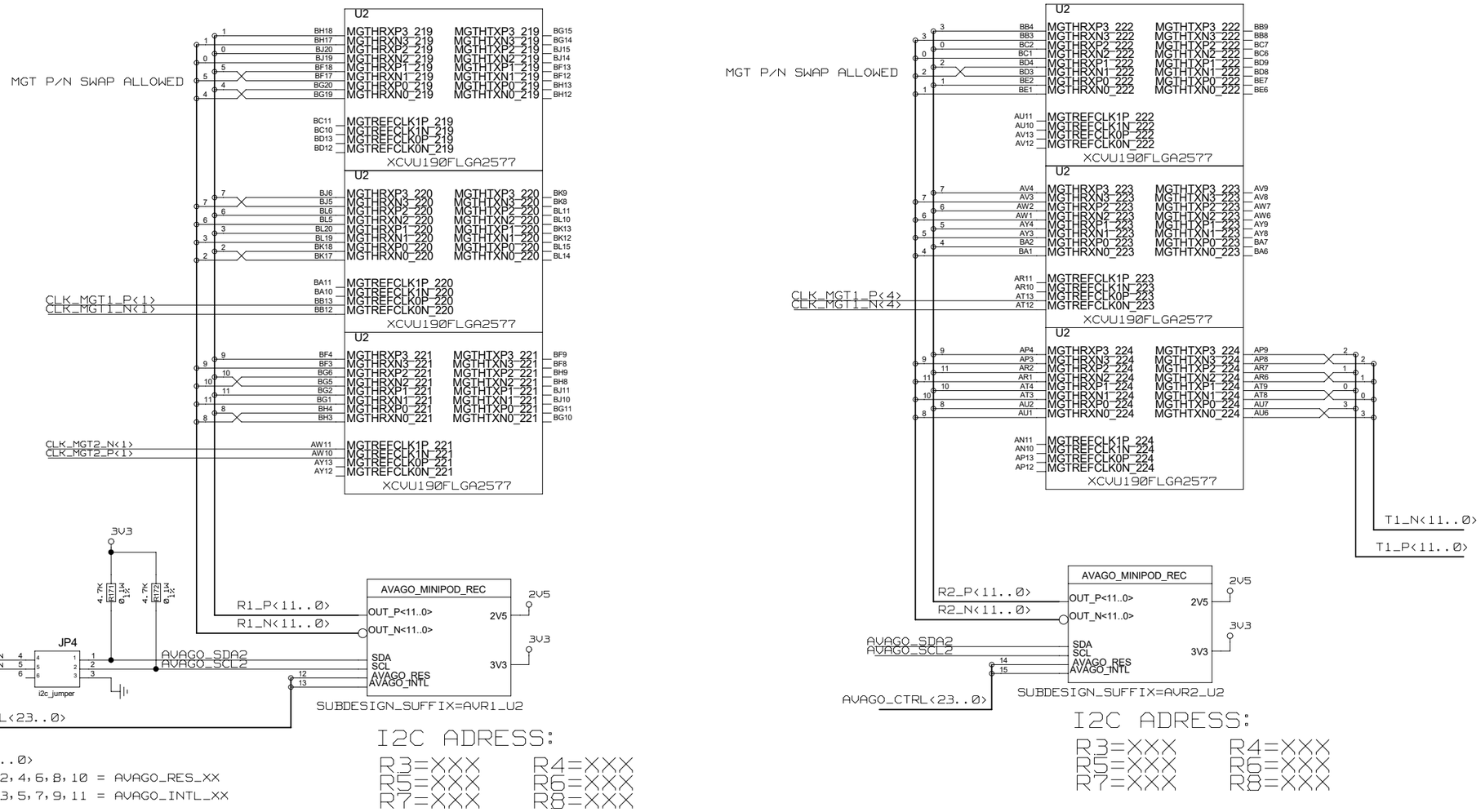

BANK
219
220
221
222
223
224

	NAME	DATE	SIGN
CHECKED	J. V.DE SOUZA		
CHECKED	U.SCHAEFER		
CHECKED	S.RAVE		
DRAWN	BAUSS	07.08.2015	

BLOCK TITLE: U2_MGT_REAL_TIME

DRAWING TITLE: TOPO_L2

UNIVERSITY OF MAINZ

SIZE: C | REV. | DRAWING NO.

SCALE | SHEET 2 OF 7

REVISIONS				
ZONE	LTR	DESCRIPTION	DATE	APPR.

HIGH SPPED OPTICAL LINKS

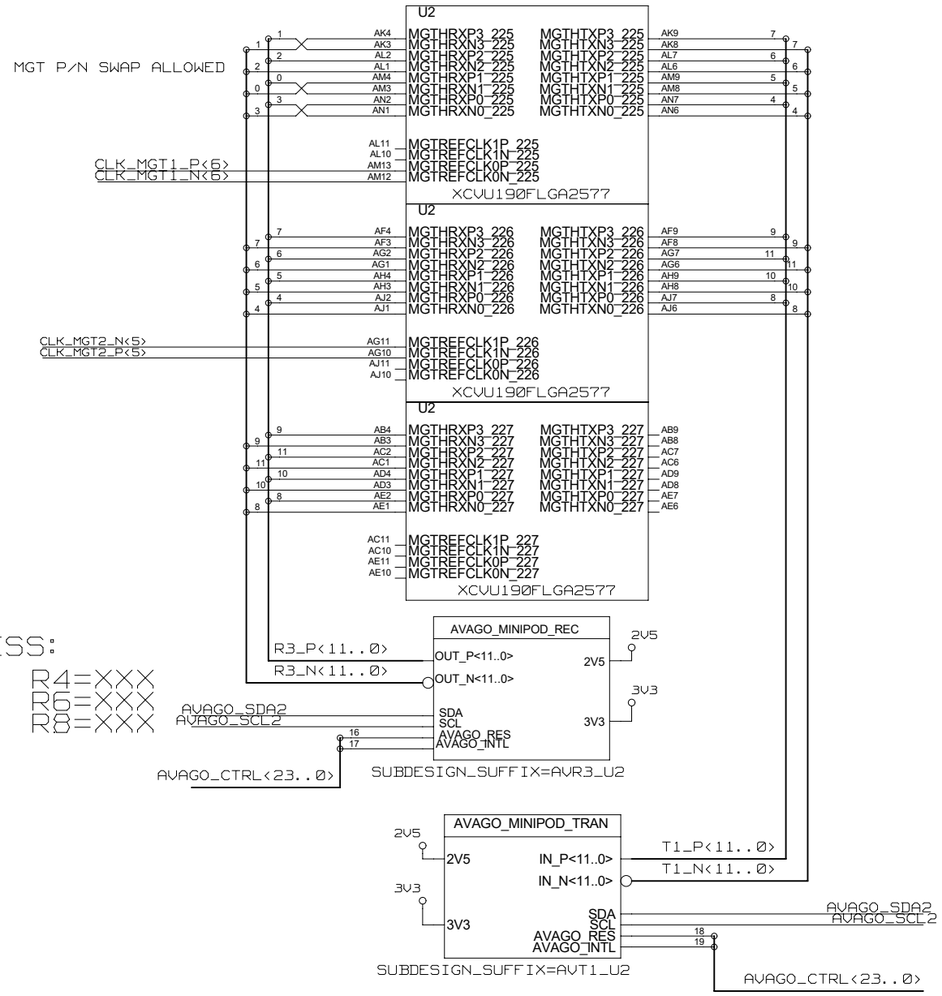

I2C ADRESS:

R3=XXX R4=XXX
R5=XXX R6=XXX
R7=XXX R8=XXX

I2C ADRESS:

R3=XXX R4=XXX
R5=XXX R6=XXX
R7=XXX R8=XXX

BANK
225
226
227

	NAME	DATE	SIGN
CHECKED	J. V.DE SOUZA		
CHECKED	U.SCHAEFER		
CHECKED	S.RAVE		
DRAWN	BAUSS	07.08.2015	

BLOCK TITLE: U3_MGT_REAL_TIME

DRAWING TITLE: TOPO_L2

UNIVERSITY OF MAINZ

SIZE: C | REV. | DRAWING NO.

SCALE | SHEET 3 OF 7

REVISIONS				
ZONE	LTR	DESCRIPTION	DATE	APPR.

HIGH SPPED OPTICAL LINKS

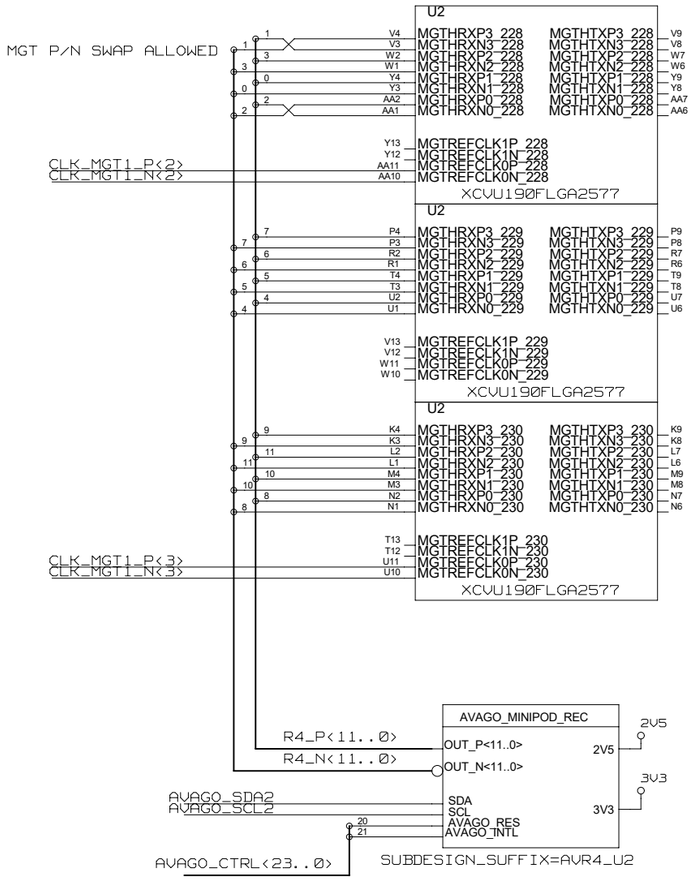

I2C ADRESS:

R3=XXX R4=XXX
R5=XXX R6=XXX
R7=XXX R8=XXX

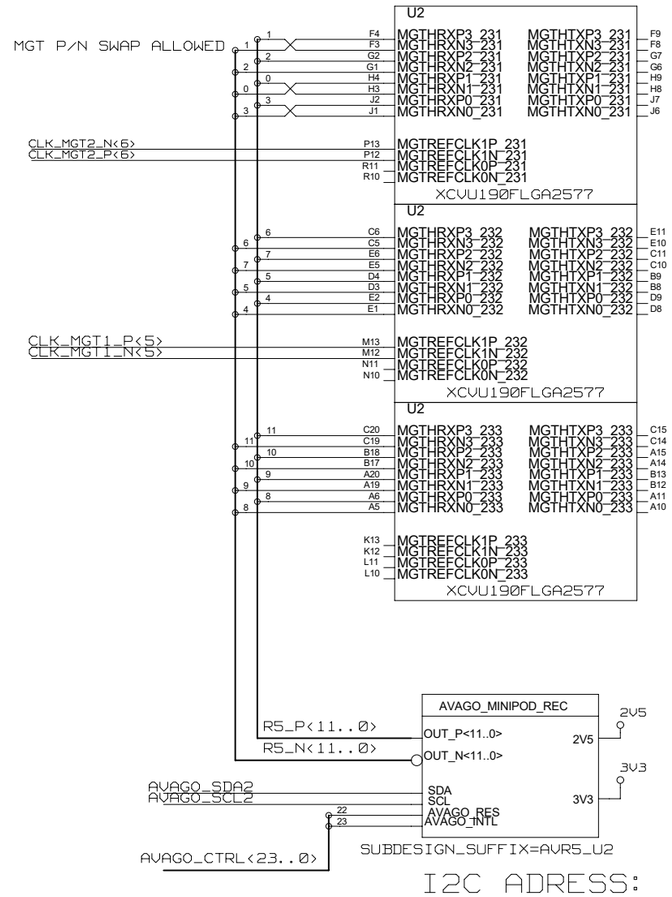

I2C ADRESS:

R3=XXX R4=XXX
R5=XXX R6=XXX
R7=XXX R8=XXX

BANK
228
229
230
231
232
233

	NAME	DATE	SIGN
CHECKED	J. V.DE SOUZA		
CHECKED	U.SCHAEFER		
CHECKED	S.RAVE		
DRAWN	BAUSS	07.08.2015	

BLOCK TITLE: U2_MGT_REAL_TIME

DRAWING TITLE: TOPO_L2

UNIVERSITY OF MAINZ

SIZE: C | REV. | DRAWING NO.

SCALE | SHEET 4 OF 7

REVISIONS				
ZONE	LTR	DESCRIPTION	DATE	APPR.

MGT1 CLOCK

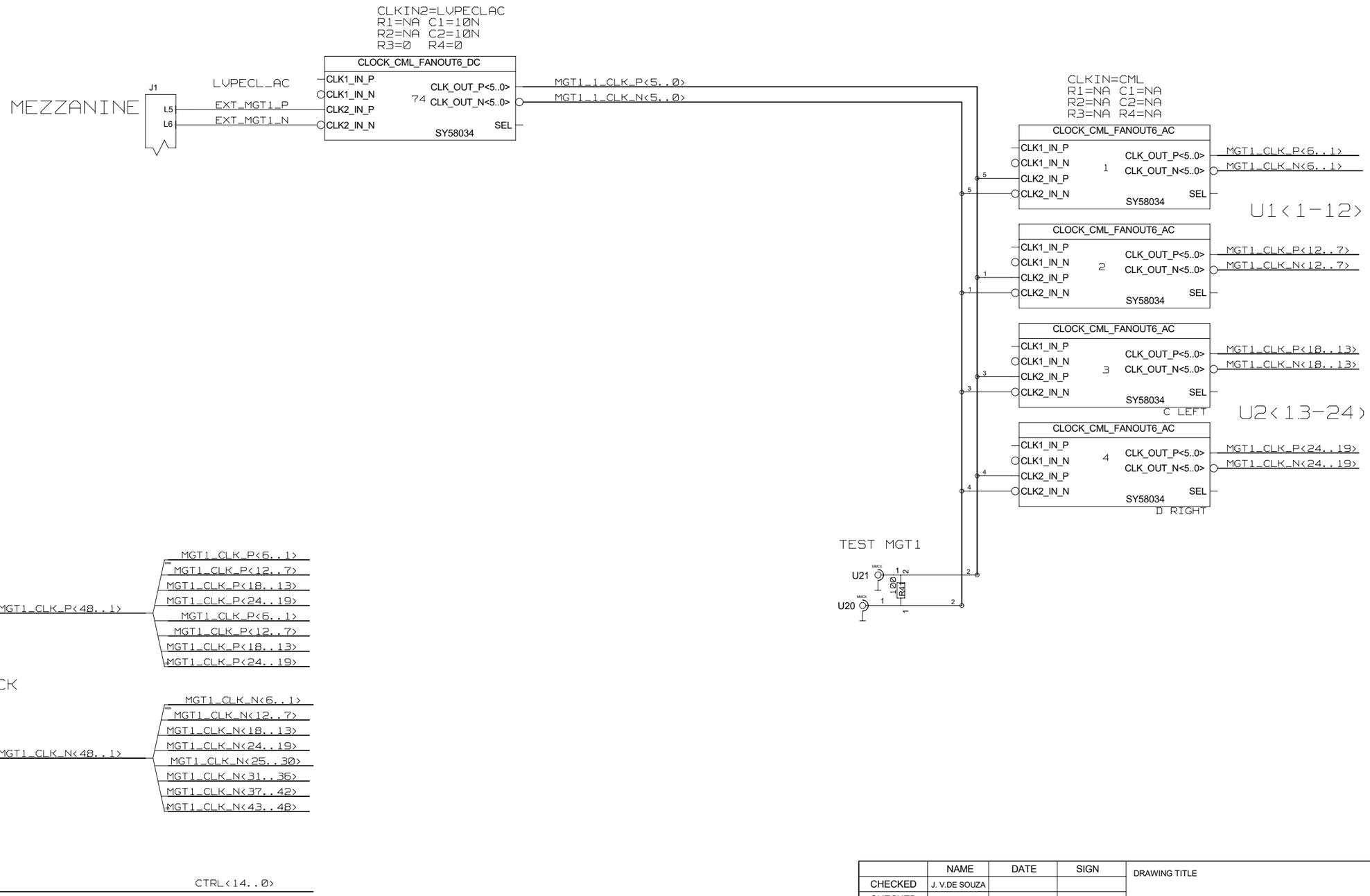

UPDATE PICK & PLACE DATA FOR FANOUT AND MUX

	NAME	DATE	SIGN
CHECKED	J. V.DE SOUZA		
CHECKED	U.SCHAEFER		
CHECKED	S.RAVE		
DRAWN	BAUSS	08.06.2017	

BLOCK TITLE: CLOCK

DRAWING TITLE: TOPO_L2

UNIVERSITY OF MAINZ

SIZE: C | REV. | DRAWING NO.

SCALE | SHEET 1 OF 5

REVISIONS				
ZONE	LTR	DESCRIPTION	DATE	APPR.

MGT2 CLOCK

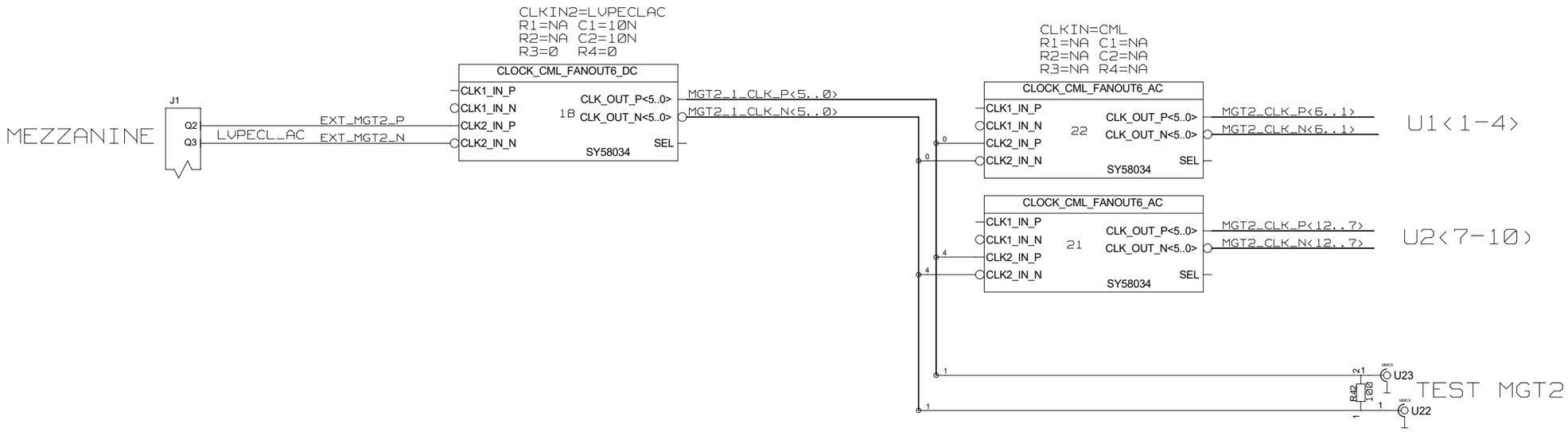

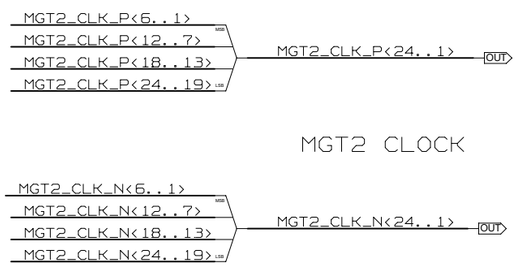

UPDATE PICK & PLACE DATA FOR FANOUT AND MUX

	NAME	DATE	SIGN
CHECKED	J. V.DE SOUZA		
CHECKED	U.SCHAEFER		
CHECKED	S.RAVE		
DRAWN	BAUSS	08.06.2017	

BLOCK TITLE: CLOCK

DRAWING TITLE: TOPO_L2

UNIVERSITY OF MAINZ

SIZE: C | REV. | DRAWING NO.

SCALE | SHEET 2 OF 5

REVISIONS				
ZONE	LTR	DESCRIPTION	DATE	APPR.

MGT3 CLOCK (ROD REFCLK)

CLKIN2=LVPECLAC
R1=NA C1=10N
R2=NA C2=10N
R3=0 R4=0

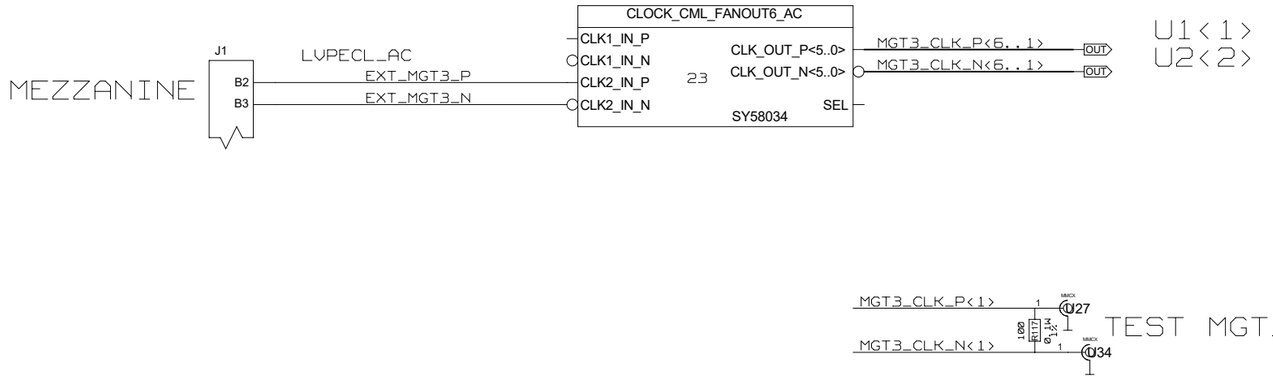

UPDATE PICK & PLACE DATA FOR FANOUT AND MUX

	NAME	DATE	SIGN
CHECKED	J. V.DE SOUZA		
CHECKED	U.SCHAEFER		
CHECKED	S.RAVE		
DRAWN	BAUSS	08.05.2017	

BLOCK TITLE: CLOCK

DRAWING TITLE: TOPO_L2

UNIVERSITY OF MAINZ

SIZE: C | REV. | DRAWING NO.

SCALE | SHEET 3 OF 5

REVISIONS				
ZONE	LTR	DESCRIPTION	DATE	APPR.

MGT4 CLOCK (IPBUS REFCLK)

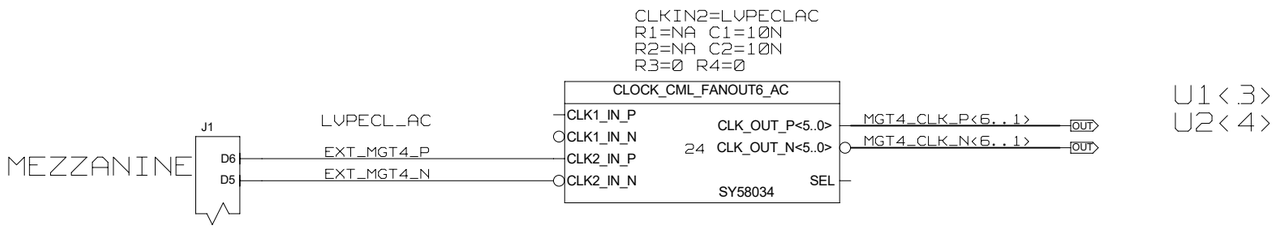

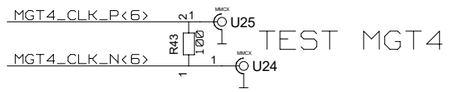

UPDATE PICK & PLACE DATA FOR FANOUT AND MUX

	NAME	DATE	SIGN
CHECKED	J. V.DE SOUZA		
CHECKED	U.SCHAEFER		
CHECKED	S.RAVE		
DRAWN	BAUSS	08.06.2017	

BLOCK TITLE: CLOCK

DRAWING TITLE: TOPO_L2

UNIVERSITY OF MAINZ

SIZE: C | REV. | DRAWING NO.

SCALE | SHEET 4 OF 5

REVISIONS				
ZONE	LTR	DESCRIPTION	DATE	APPR.

GLOBAL CLOCK1

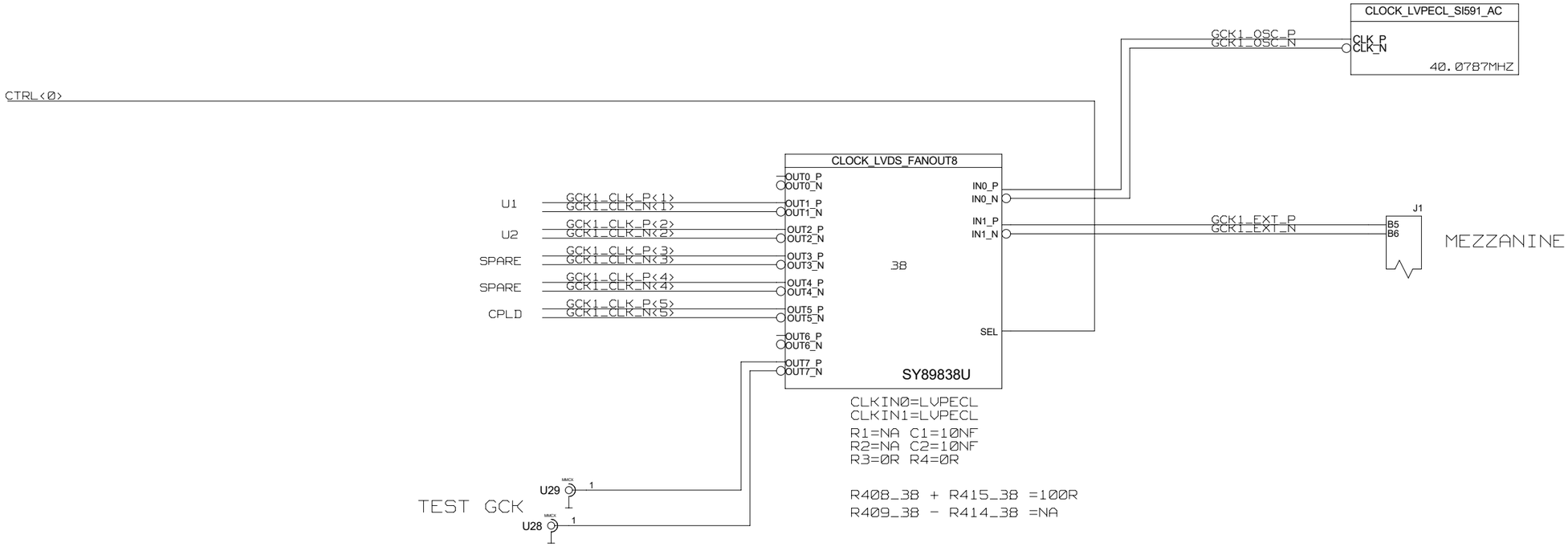

CMOS to Any-In

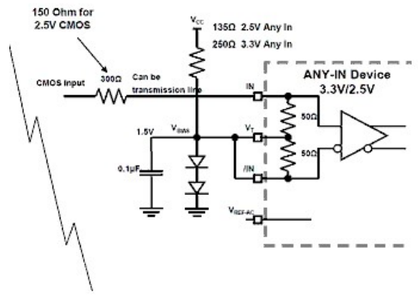

LVDS
OUT GCK1_CLK_P<5..1>
OUT GCK1_CLK_N<5..1>

GCK1 = CLK U1
GCK2 = CLK U2
GCK3 = SPARE
GCK4 = SPARE
GCK5 = CLK CPLD

	NAME	DATE	SIGN
CHECKED	J. V.DE SOUZA		
CHECKED	U.SCHAEFER		
CHECKED	S.RAVE		
DRAWN	BAUSS	17.08.2015	
BLOCK TITLE	CLOCK		

DRAWING TITLE: TOPO L2

UNIVERSITY OF MAINZ

SIZE: C | REV. | DRAWING NO.

SCALE | SHEET 5 OF 5

REVISIONS				
ZONE	LTR	DESCRIPTION	DATE	APPR.

GLOBAL CLOCK2

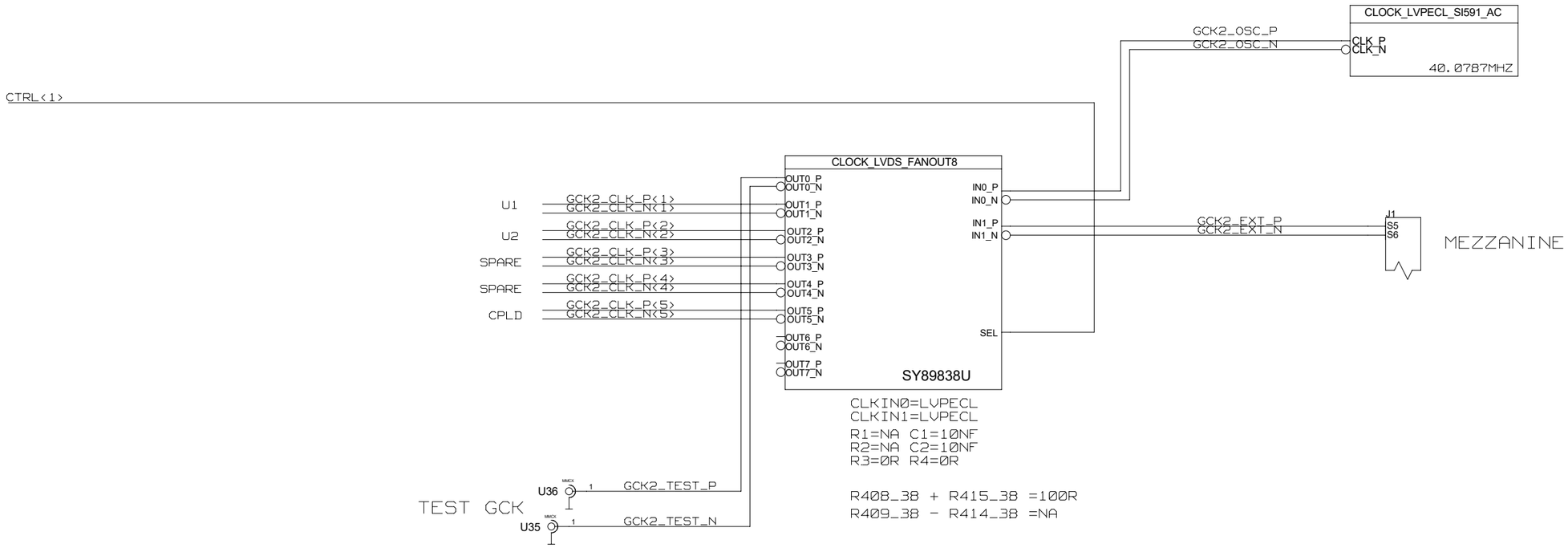

CMOS to Any-In

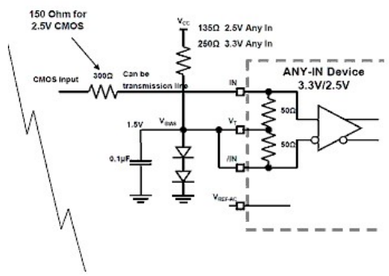

LVDS
OUT GCK2_CLK_P<5..1>
OUT GCK2_CLK_N<5..1>

GCK1 = CLK U1
GCK2 = CLK U2
GCK3 = SPARE
GCK4 = SPARE
GCK5 = CLK CPLD

	NAME	DATE	SIGN
CHECKED	J. V.DE SOUZA		
CHECKED	U.SCHAEFER		
CHECKED	S.RAVE		
DRAWN	BAUSS	17.08.2015	

BLOCK TITLE: CLOCK

DRAWING TITLE: TOPO L2

UNIVERSITY OF MAINZ

SIZE: C | REV. | DRAWING NO.

SCALE | SHEET 5 OF 5

REVISIONS				
ZONE	LTR	DESCRIPTION	DATE	APPR.

LHC1 + LHC2 CLK

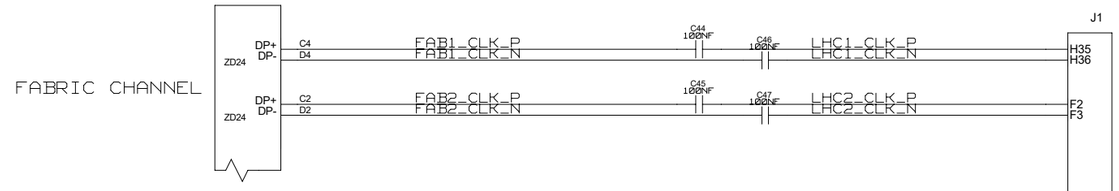

TTC DATA

	NAME	DATE	SIGN
CHECKED	J. V.DE SOUZA		
CHECKED	U.SCHAEFER		
CHECKED	S.RAVE		
DRAWN	BAUSS	06.11.2015	

BLOCK TITLE: CLOCK

DRAWING TITLE: TOPO_L2

UNIVERSITY OF MAINZ

SIZE: C | REV. | DRAWING NO.

SCALE | SHEET OF

REVISIONS				
ZONE	LTR	DESCRIPTION	DATE	APPR.

CLOCK CML FANOUT6 AC

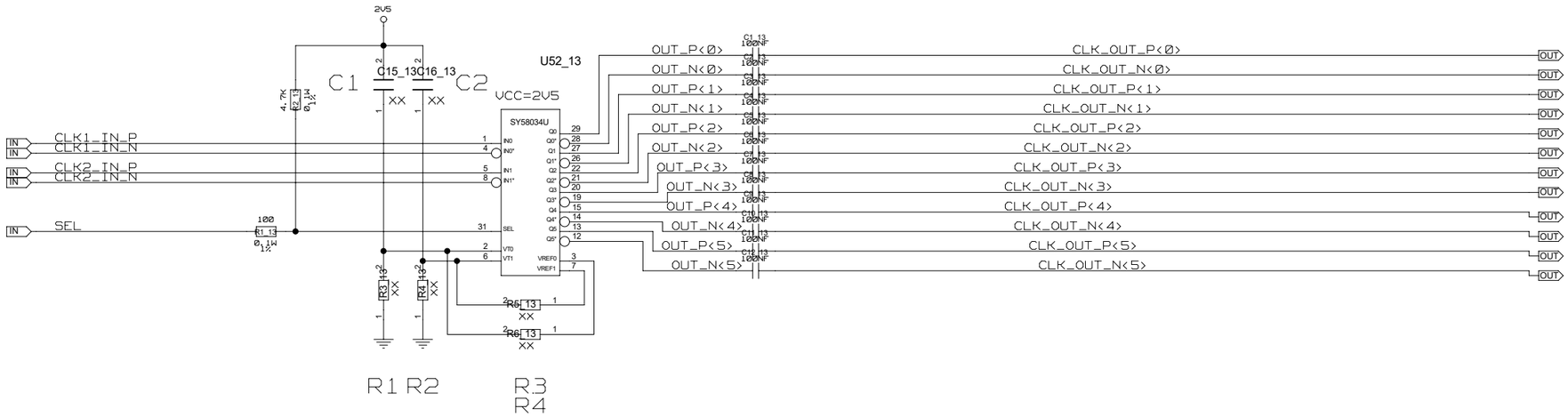

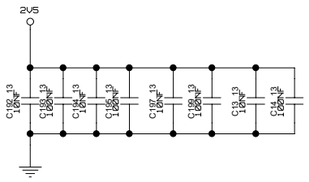

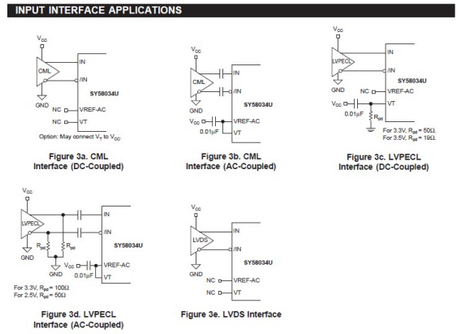

	NAME	DATE	SIGN
CHECKED	J. V.DE SOUZA		
CHECKED	U.SCHAEFER		
CHECKED	S.RAVE		
DRAWN	BAUSS		

BLOCK TITLE
CLOCK CML FANOUT6 AC

UNIVERSITY OF MAINZ

DRAWING TITLE
TOPO_L2

SIZE C | REV. | DRAWING NO.

SCALE | SHEET OF

REVISIONS				
ZONE	LTR	DESCRIPTION	DATE	APPR.

CLOCK_LVDS_FANOUT8

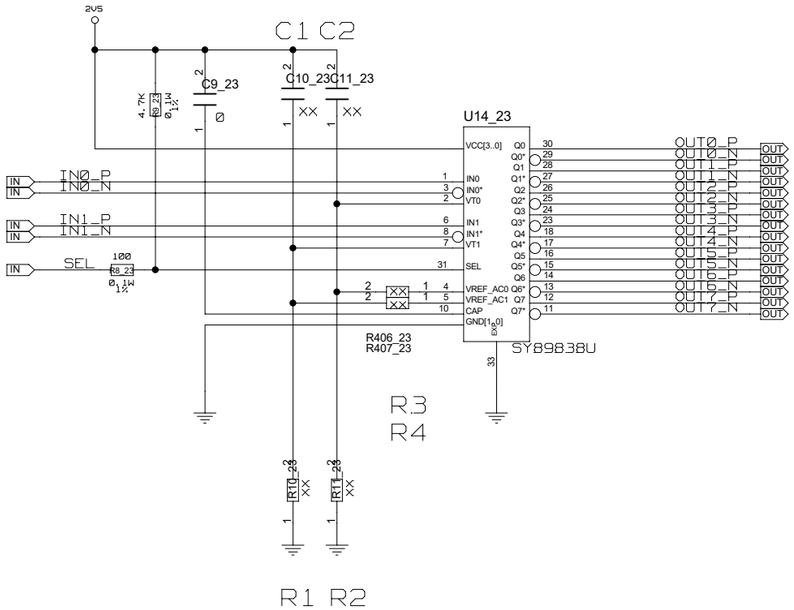

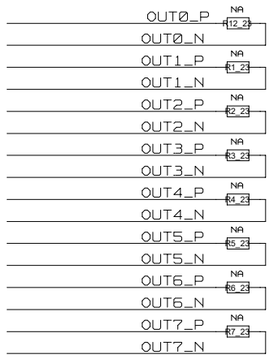

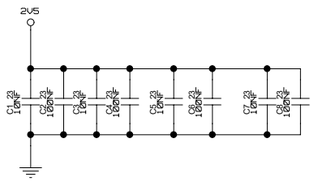

	NAME	DATE	SIGN
CHECKED	J. V.DE SOUZA		
CHECKED	U.SCHAEFER		
CHECKED	S.RAVE		
DRAWN	BAUSS		

BLOCK TITLE
CLOCK_LVDS_FANOUT8

DRAWING TITLE
TOPO L2

UNIVERSITY OF MAINZ

SIZE C | REV. | DRAWING NO.

SCALE | SHEET OF

REVISIONS				
ZONE	LTR	DESCRIPTION	DATE	APPR.

CLOCK_LVPECL_SI591_AC

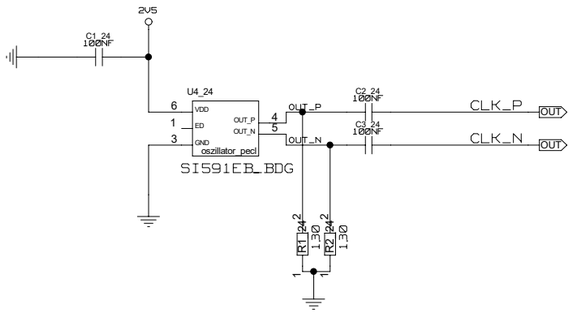

	NAME	DATE	SIGN
CHECKED	J. V.DE SOUZA		
CHECKED	U.SCHAEFER		
CHECKED	S.RAVE		
DRAWN	BAUSS		

BLOCK TITLE
CLOCK_LVPECLSI591_AC

UNIVERSITY OF MAINZ

DRAWING TITLE
TOPO L2

SIZE C | REV. | DRAWING NO.

SCALE | SHEET OF

IPMC CONNECTOR MOLEX_87782-3003

REVISIONS				
ZONE	LTR	DESCRIPTION	DATE	APPR.

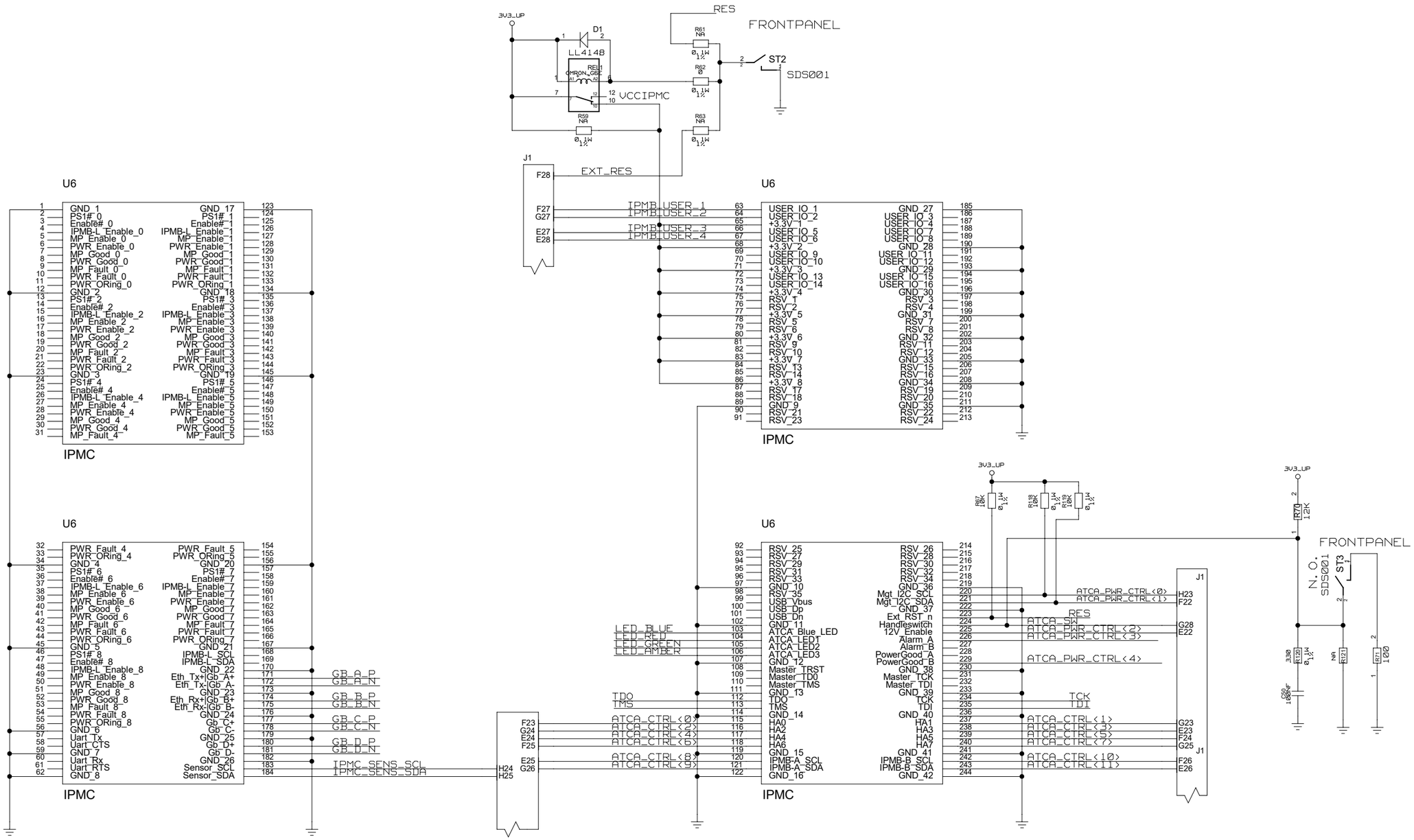

ATCA_HA<0..7> BACKPLANE + MEZZANINE

ATCA_A/B_SCL/SDA BACKPLANE + MEZZANINE

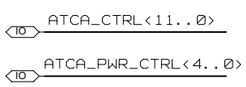

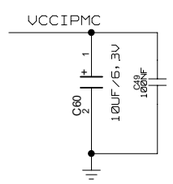

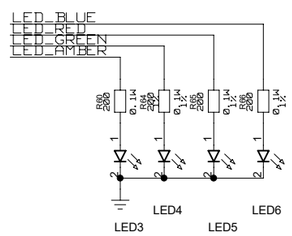

	NAME	DATE	SIGN
CHECKED	J. V.DE SOUZA		
CHECKED	U.SCHAEFER		
CHECKED	S.RAVE		
DRAWN	BAUSS	30.10.2015	

BLOCK TITLE: IPMC

DRAWING TITLE: TOPO_L2

UNIVERSITY OF MAINZ

SIZE: C | REV. | DRAWING NO.

SCALE | SHEET OF

REVISIONS				
ZONE	LTR	DESCRIPTION	DATE	APPR.

IPMC CONTROL

IPMC JTAG PORT FRONTPANEL

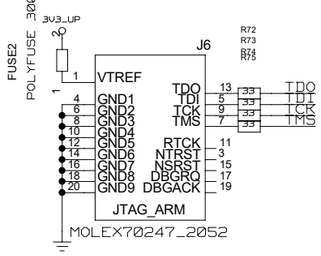

I2C FPGA TEMPERATURE

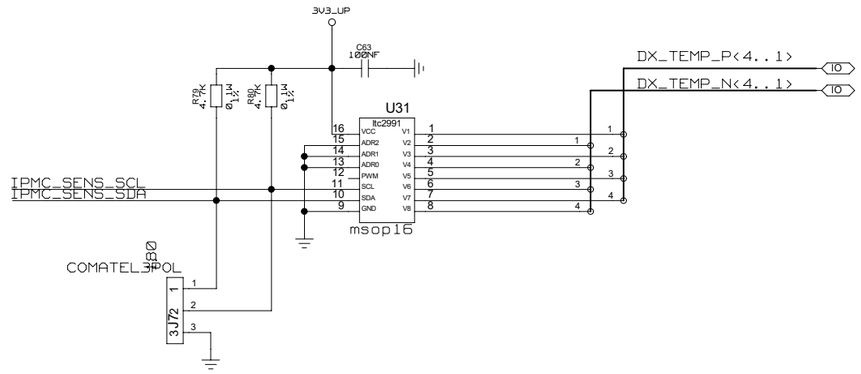

MEMORY

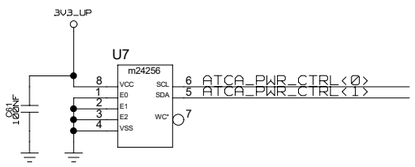

I2C BOARDTEMP

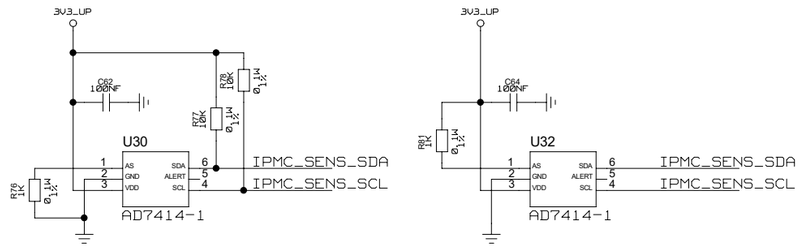

	NAME	DATE	SIGN
CHECKED	J. V.DE SOUZA		
CHECKED	U.SCHAEFER		
CHECKED	S.RAVE		
DRAWN	BAUSS	23.07.2015	

BLOCK TITLE: IPMC

DRAWING TITLE: TOPO_L2

UNIVERSITY OF MAINZ

SIZE: C | REV. | DRAWING NO.

SCALE | SHEET OF

REVISIONS				
ZONE	LTR	DESCRIPTION	DATE	APPR.

IPMC CONTROL

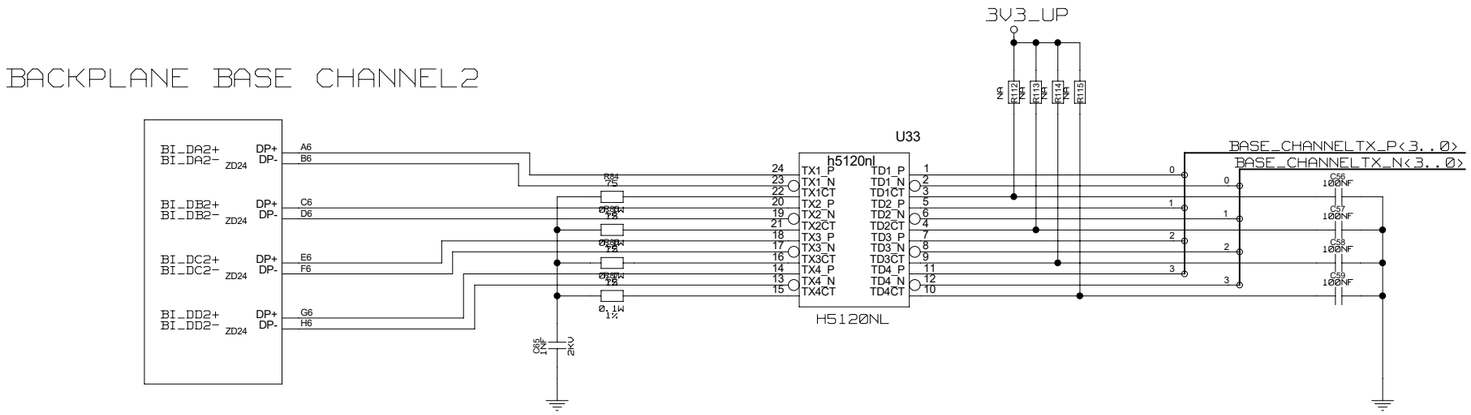

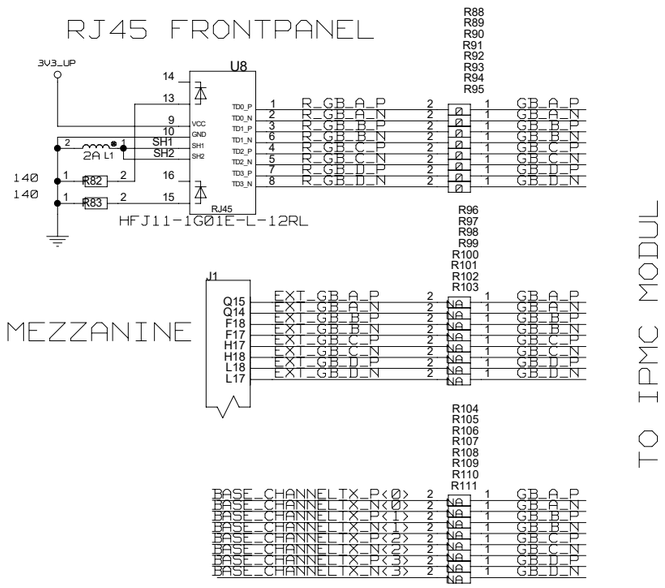

	NAME	DATE	SIGN
CHECKED	J. V.DE SOUZA		
CHECKED	U.SCHAEFER		
CHECKED	S.RAVE		
DRAWN	BAUSS		

BLOCK TITLE
IPMC

DRAWING TITLE
TOPO_L2

UNIVERSITY OF MAINZ

SIZE C | REV. | DRAWING NO.

SCALE | SHEET OF

REVISIONS				
ZONE	LTR	DESCRIPTION	DATE	APPR.

CONTROL AND CONFIG CPLD

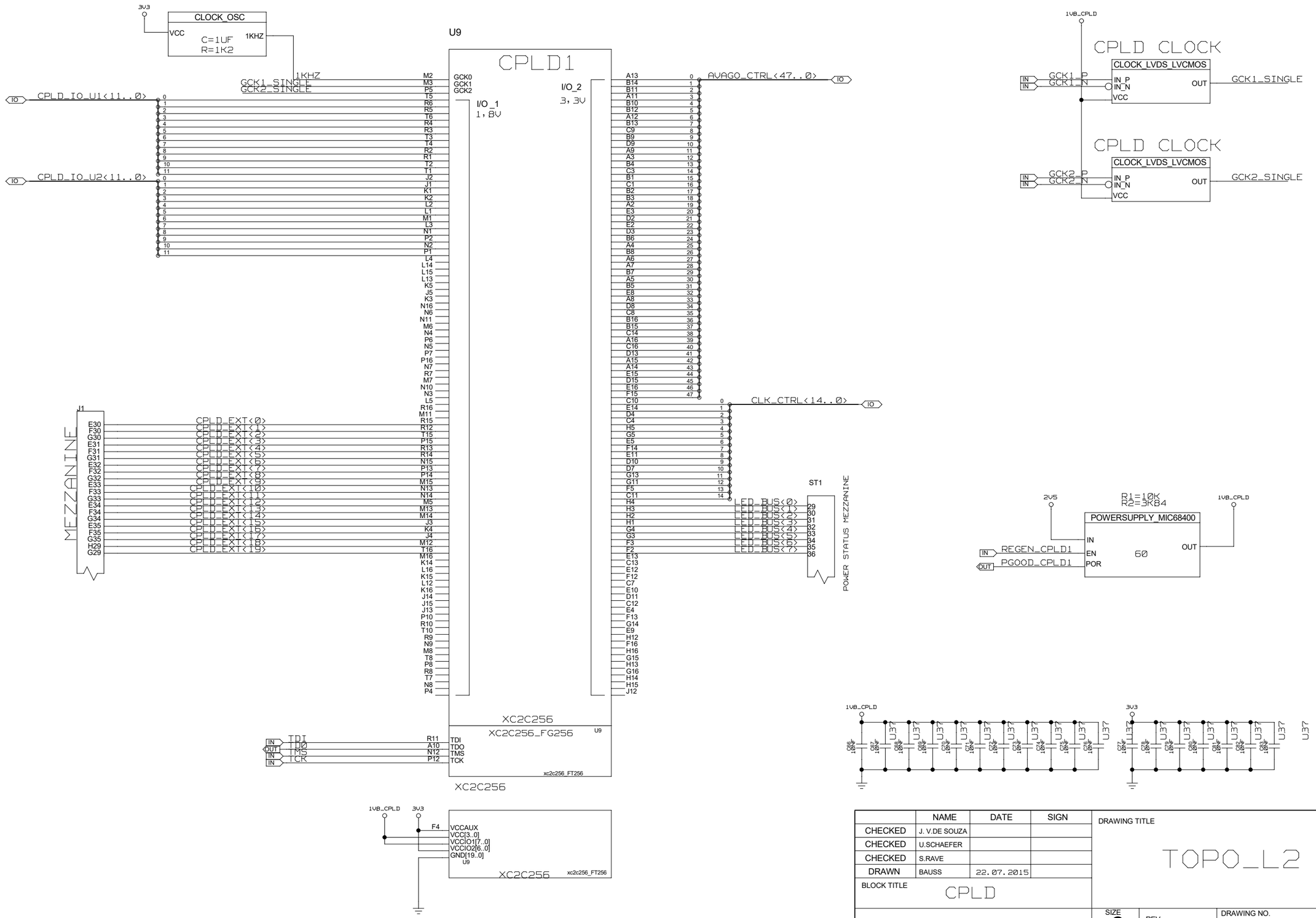

	NAME	DATE	SIGN
CHECKED	J. V.DE SOUZA		
CHECKED	U.SCHAEFER		
CHECKED	S.RAVE		
DRAWN	BAUSS	22.07.2015	

BLOCK TITLE: CPLD

DRAWING TITLE: TOPO_L2

UNIVERSITY OF MAINZ

SIZE: C | REV. | DRAWING NO.

SCALE | SHEET 1 OF 1

REVISIONS				
ZONE	LTR	DESCRIPTION	DATE	APPR.

CONFIG U1

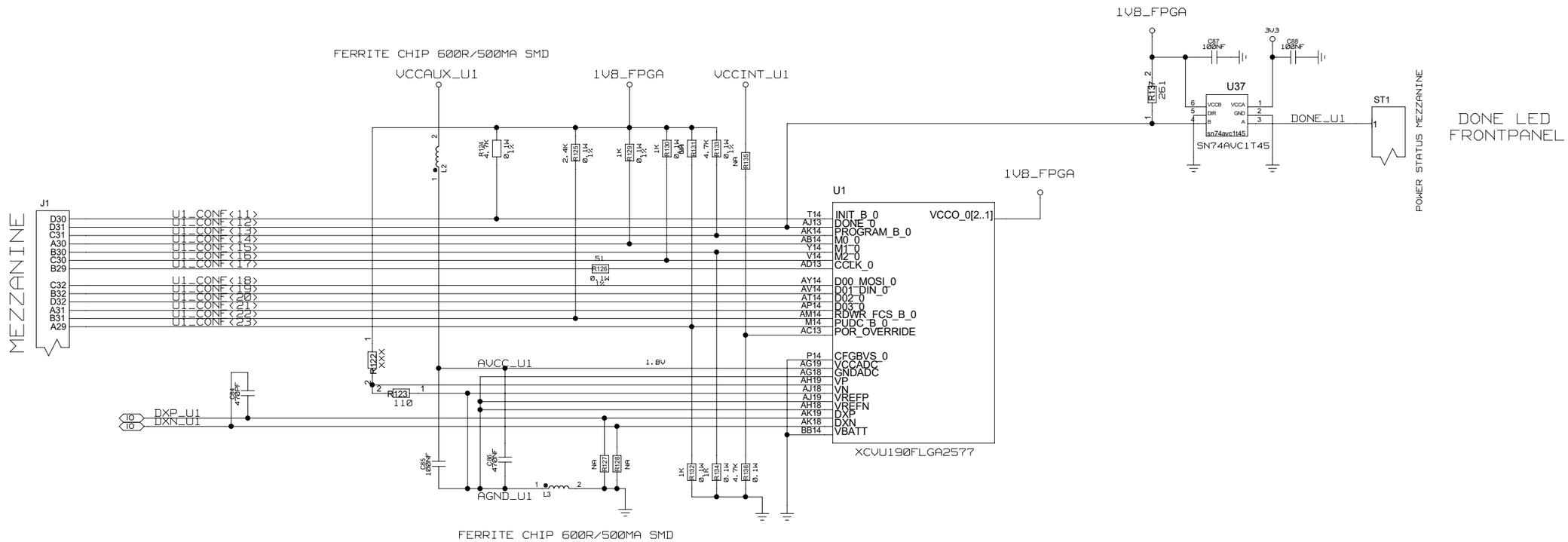

	NAME	DATE	SIGN
CHECKED	J. V.DE SOUZA		
CHECKED	U.SCHAEFER		
CHECKED	S.RAVE		
DRAWN	BAUSS	17.09.2015	

BLOCK TITLE
CONFIGURATION PROCESSOR U1

DRAWING TITLE
TOPO_L2

UNIVERSITY OF MAINZ

SIZE C | REV. | DRAWING NO.

SCALE | SHEET 1 OF 1

REVISIONS				
ZONE	LTR	DESCRIPTION	DATE	APPR.

CONFIG U2

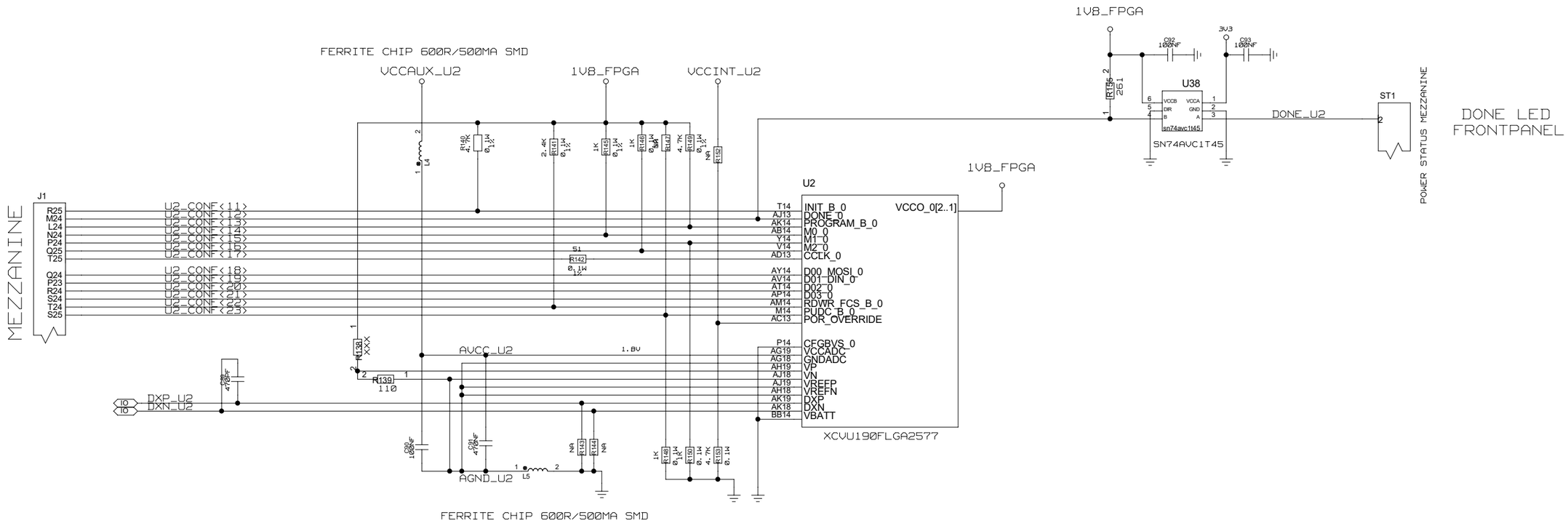

	NAME	DATE	SIGN
CHECKED	J. V.DE SOUZA		
CHECKED	U.SCHAEFER		
CHECKED	S.RAVE		
DRAWN	BAUSS		
BLOCK TITLE			

DRAWING TITLE

TOPO_L2

UNIVERSITY OF MAINZ

SIZE C | REV. | DRAWING NO.

SCALE | SHEET OF

REVISIONS				
ZONE	LTR	DESCRIPTION	DATE	APPR.

IPBUS

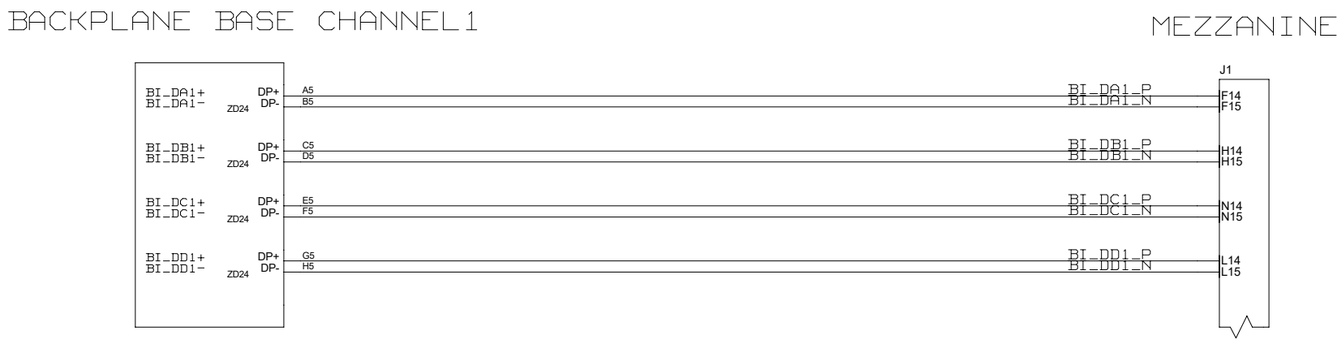

	NAME	DATE	SIGN
CHECKED	J. V.DE SOUZA		
CHECKED	U.SCHAEFER		
CHECKED	S.RAVE		
DRAWN	BAUSS	05.11.2015	

BLOCK TITLE: IPBUS

DRAWING TITLE: TOPO_L2

UNIVERSITY OF MAINZ

SIZE: C | REV. | DRAWING NO.

SCALE | SHEET OF

REVISIONS				
ZONE	LTR	DESCRIPTION	DATE	APPR.

JTAG CHAIN

LEVELTRANSLATOR

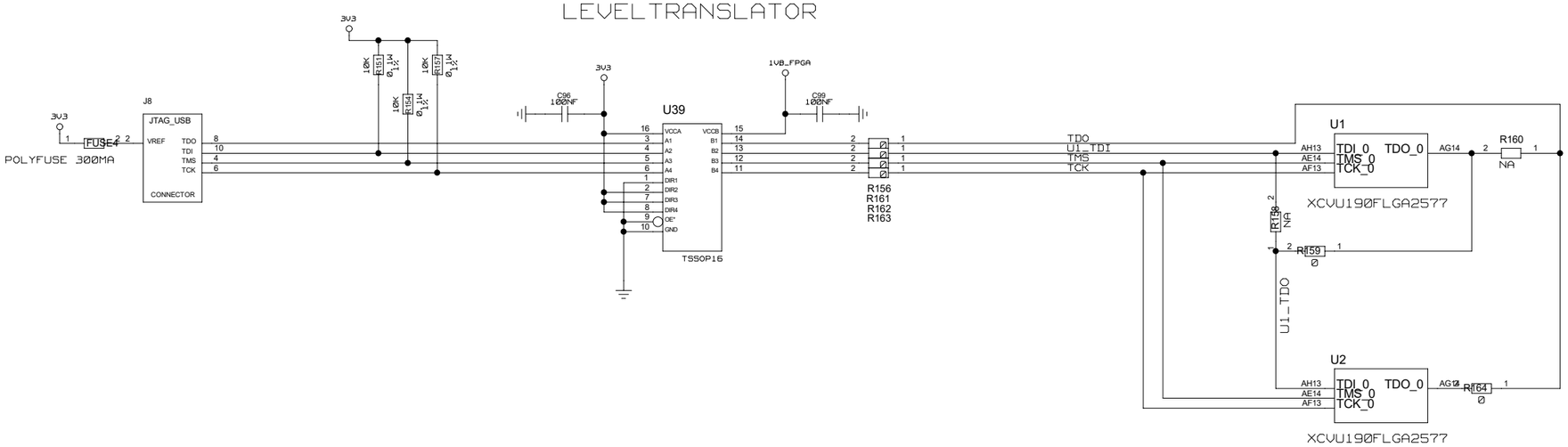

	NAME	DATE	SIGN
CHECKED	J. V.DE SOUZA		
CHECKED	U.SCHAEFER		
CHECKED	S.RAVE		
DRAWN	BAUSS	08.05.2017	

BLOCK TITLE: JTAG

DRAWING TITLE: TOPO_L2

UNIVERSITY OF MAINZ

SIZE: C | REV. | DRAWING NO.

SCALE | SHEET OF

REVISIONS				
ZONE	LTR	DESCRIPTION	DATE	APPR.

CONNECTOR CTP MEZZ

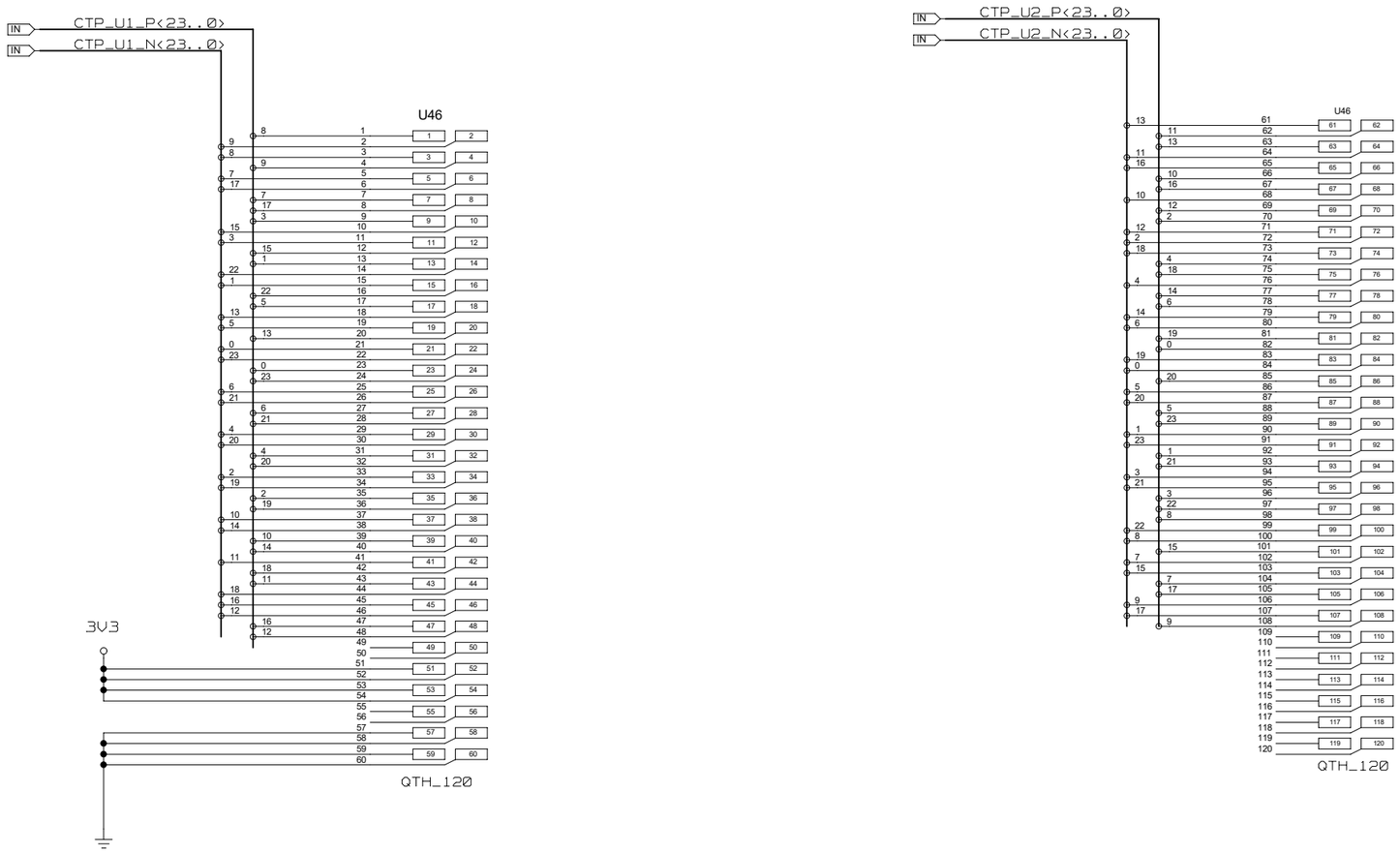

	NAME	DATE	SIGN
CHECKED	J. V.DE SOUZA		
CHECKED	U.SCHAEFER		
CHECKED	S.RAVE		
DRAWN	BAUSS		

BLOCK TITLE CTP_MEZZ

DRAWING TITLE TOPO_L2

UNIVERSITY OF MAINZ

SIZE C | REV. | DRAWING NO.

SCALE | SHEET OF