REVISIONS				
ZONE	LTR	DESCRIPTION	DATE	APPR.

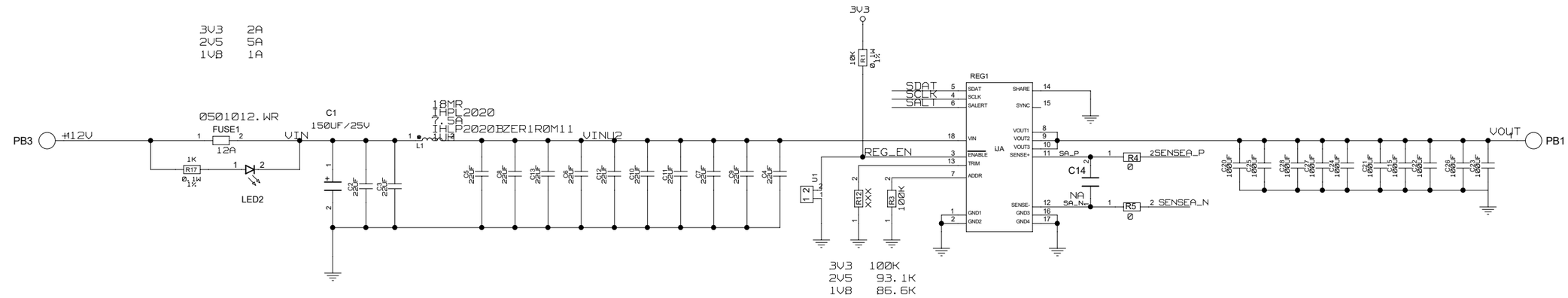

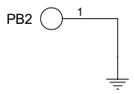

POWER GOOD

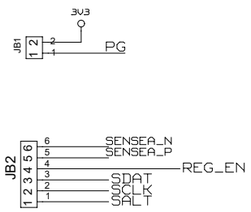

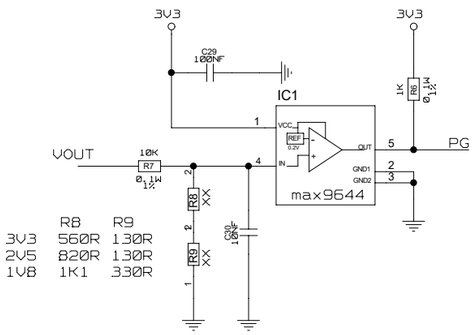

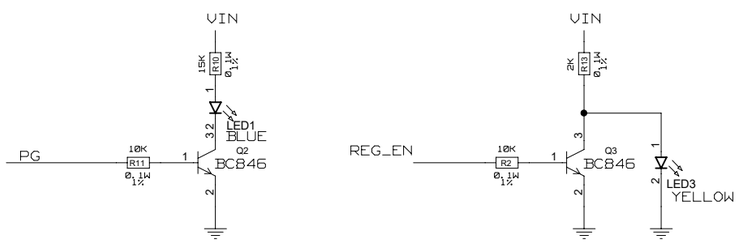

TDK PMBus Adresses		
RADDR (KOHM)	PMBus ADDR	RAIL
0 – 6.81	10h	1V8
10	11h	2V5
13.3	12h	3V3
17.8	13h	
21.5	14h	U1_VCCINT
26.1	15h	U1_MGTAVCC
31.6	16h	U1_MGTAVTT
34.8	17h	
38.3	18h	U2_VCCINT
42.2	19h	U2_MGTAVCC
46.4	1Ah	U2_MGTAVTT
51.1	1Bh	
56.2	1Ch	U3_VCCINT
61.9	1Dh	U3_MGTAVCC
68.1	1Eh	U3_MGTAVTT
75	1Fh	
82.5	20h	U4_VCCINT
90.9	21h	U4_MGTAVCC
100	22h	U4_MGTAVTT
110	23h	
121	24h	
133	25h	
147	26h	
158	27h	

CADENCE DESIGN SYSTEMS,INC.

CADENCE

THIS DOCUMENT CONTAINS INFORMATION PROPRIETARY TO CADENCE DESIGN SYSTEMS INC (CADENCE). USE OR DISCLOSURE WITHOUT THE WRITTEN PERMISSION OF AN OFFICER OF CADENCE IS EXPRESSLY FORBIDDEN. COPYRIGHT (C) CADENCE 1988

DRAWING TITLE: TDK 35A

SIZE: C | REV. | DRAWING NO.

SCALE | SHEET 1 OF 2

REVISIONS				
ZONE	LTR	DESCRIPTION	DATE	APPR.

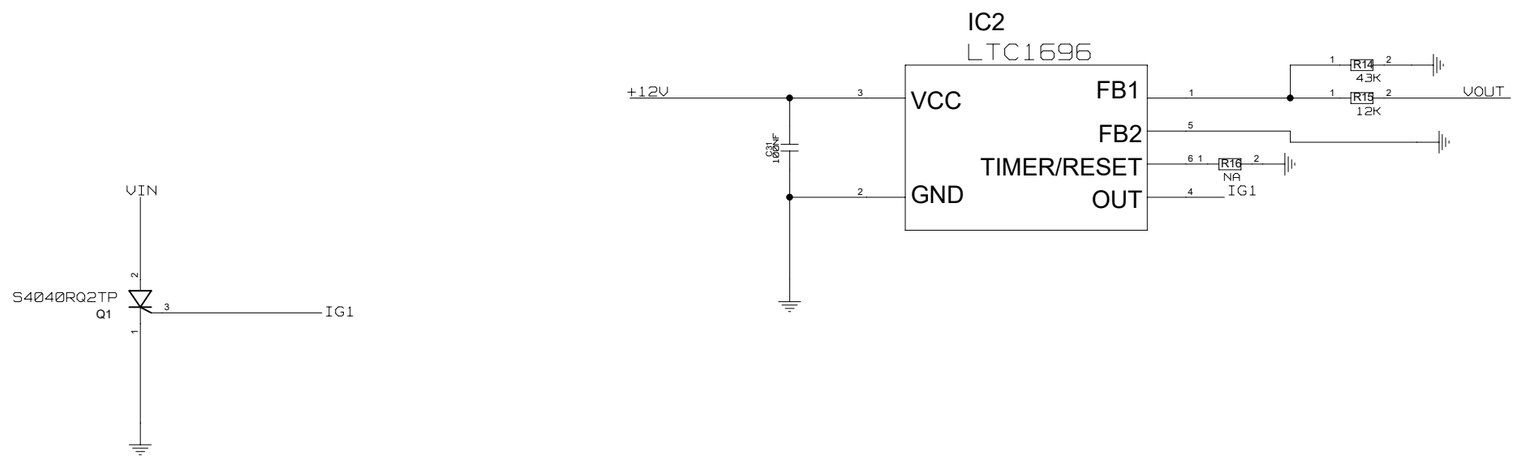

VPROTECT = 1,14V

3V3 150K
2V5 100K
1V8 62K

CADENCE DESIGN SYSTEMS,INC. CADENCE	DRAWING TITLE TDK 35A		
THIS DOCUMENT CONTAINS INFORMATION PROPRIETARY TO CADENCE DESIGN SYSTEMS INC (CADENCE). USE OR DISCLOSURE WITHOUT THE WRITTEN PERMISSION OF AN OFFICER OF CADENCE IS EXPRESSLY FORBIDDEN. COPYRIGHT (C) CADENCE 1988	SIZE C	REV.	DRAWING NO.
	SCALE		SHEET 2 OF 2